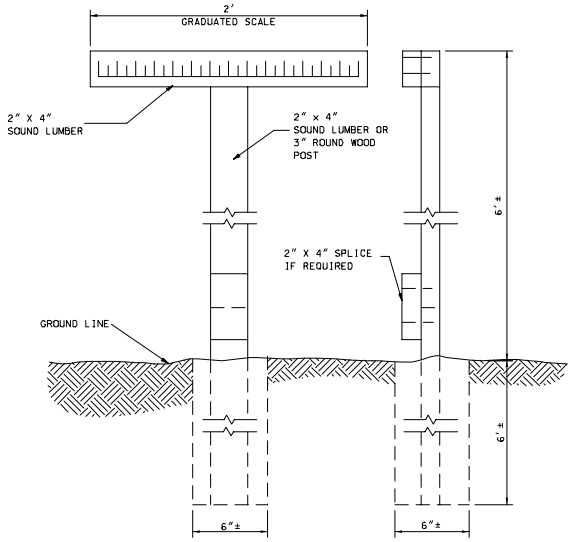

EMBANKMENT CONTROL STAKE

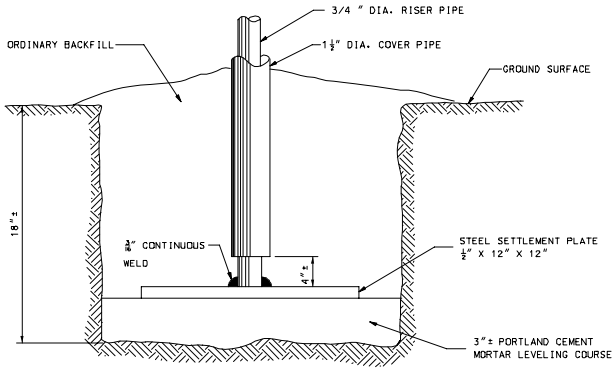

SETTLEMENT GAUGE

MISSOURI HIGHWAY AND TRANSPORTATION COMMISSION			
	EMBANKMENT CONTROL MEASURING DEVICES		
DATE:_____	EFFECTIVE:04-01-1983	204.00D	1/1

t:\de-proj\standards\DualUnits\stdpln 000-599\20400d.dgn 13 FEB 2001