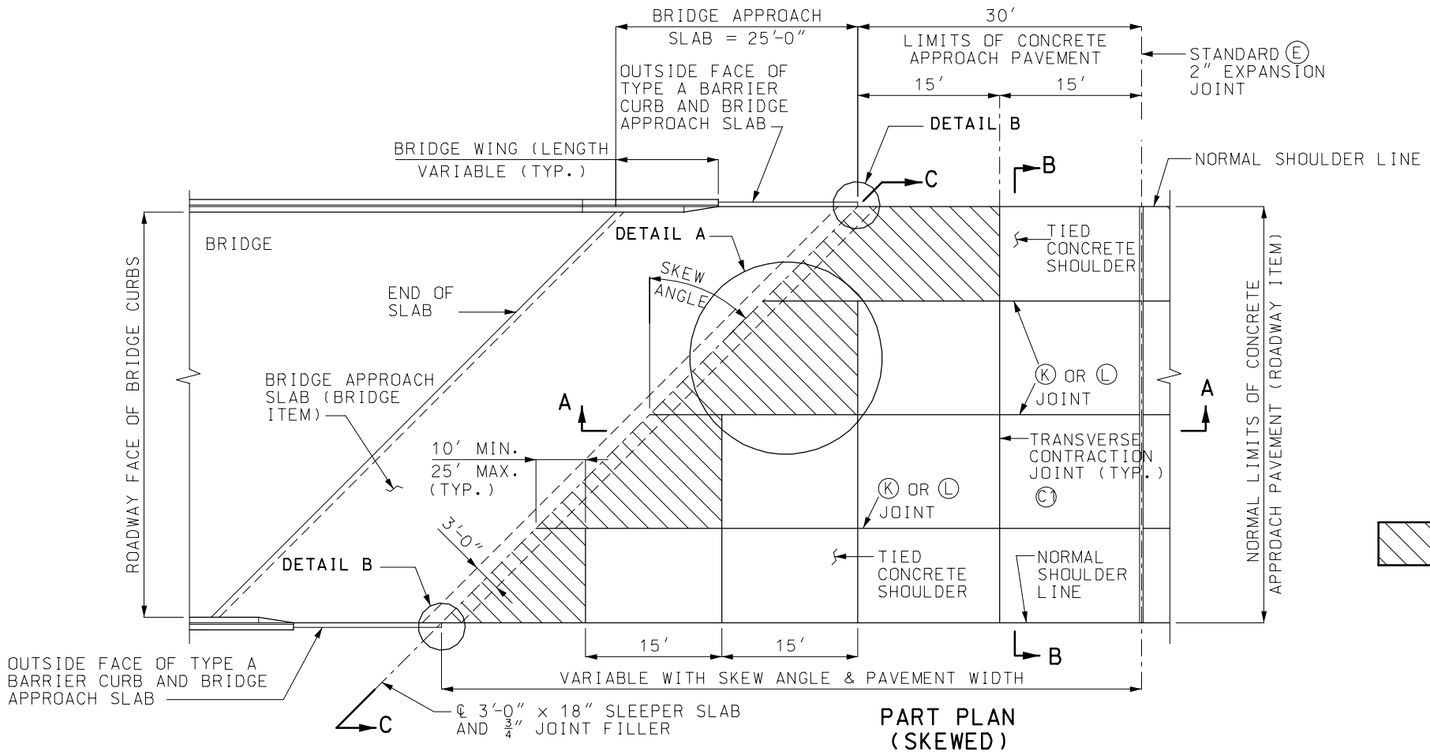

PART PLAN
(SKEWED)

REINFORCEMENT TABLE		
PCCP THICKNESS (P)	STEEL WIRE FABRIC SIZE	RE-BAR
10" OR LESS	6x12 - W6.3xW4	NO. 3, 6"x12"
GREATER THAN 10"	6x12 - W8xW4	NO. 3, 6"x12"

PARTIAL PANELS

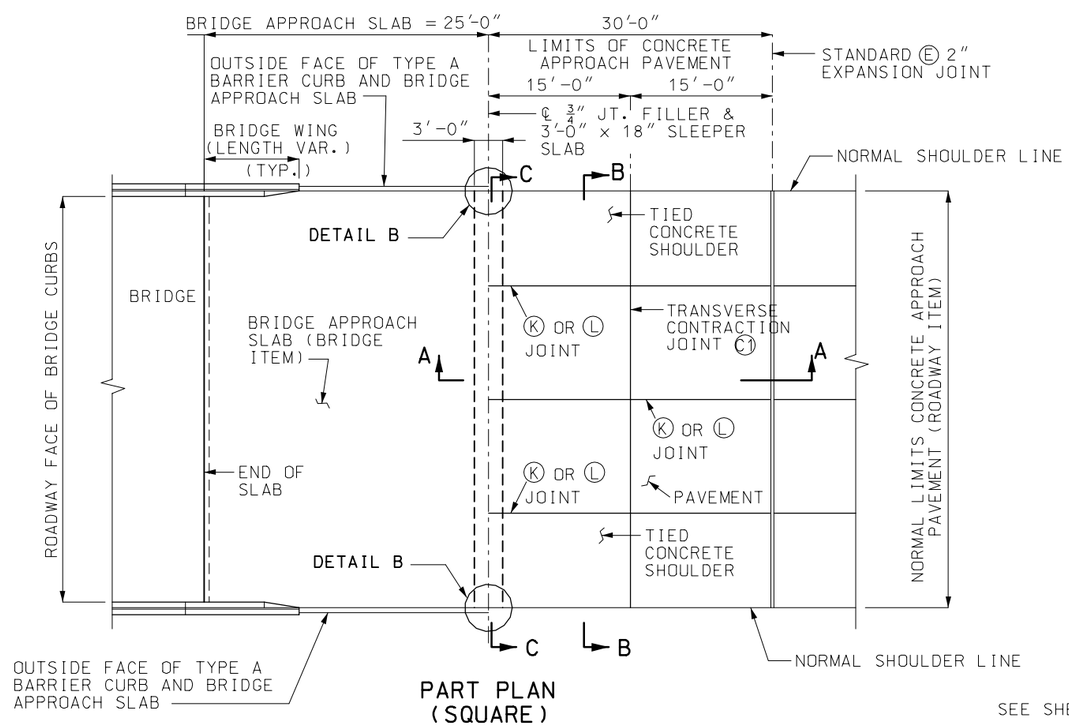

PART PLAN
(SQUARE)

SEE SHEET 2 OF 3 FOR DETAIL A AND B.

GENERAL NOTES:

THE CONCTRACTOR SHALL DETERMINE THE PAVING WIDTH. Ⓚ JOINTS SHALL BE USED BETWEEN ADJOINING SECTIONS OF PAVEMENT. Ⓛ JOINTS SHALL BE USED WITHIN THE PAVING WIDTH.

ALL CONCRETE APPROACH PAVEMENTS SHALL BE REINFORCED AS SHOWN IN TABLE.

LENGTH OF SHEETS IS 16'- 0". SHEET LENGTHS MAY BE INCREASED PROVIDING PAVING PROGRESS OR ROADWAY CURVATURE PERMITS PLACEMENT.

SHEETS SHALL BE FULL WIDTH OF PAVEMENT LANE. IF WIDTH OF LANE EXCEEDS 13 FEET, THE CONTRACTOR SHALL MAKE ONE LONGITUDINAL SPLICE, USING THE MOST ECONOMICAL WIDTH OF THE FABRIC.

MINIMUM SHEET OVERLAP AT SPLICE SHALL BE 1' LONGITUDINAL AND 6" TRANSVERSE.

TYPE A CURB IS TO BE CONSTRUCTED WITH CONCRETE APPROACH PAVEMENT ONLY WHEN DRAIN BASINS ARE REQUIRED. TYPE A CURBS WILL BE CONSIDERED AS INCIDENTAL, AND WILL BE INCLUDED IN THE PAYMENT FOR CONCRETE APPROACH PAVEMENT.

FOR SHOULDER PAVING AND DRAIN BASINS AT BRIDGE ENDS, SEE STANDARD DRAWING NUMBER 609.40.

FOR TYPE A BARRIER CURBS, STANDARD 2" EXPANSION JOINTS, LONGITUDINAL JOINTS AND TONGUE AND GROOVE JOINTS, SEE STANDARD DRAWINGS NO. 502.00 AND 609.00.

FOR BRIDGE APPROACH SLAB, SLEEPER SLAB, AND JOINT FILLER DETAILS, SEE BRIDGE PLANS.

FOR SECTIONS A-A, B-B AND C-C, SEE SHEET 3 OF 3.

A PRE-FORMED FIBER EXPANSION JOINT MATERIAL SHALL BE PLACED WITH CONCRETE APPROACH PAVEMENT AND MEET THE REQUIREMENTS OF SECTION 1057 OF THE STANDARD SPECIFICATION FOR HIGHWAY CONSTRUCTION.

COST OF FURNISHING AND PLACEMENT OF 4" TYPE 5 AGGREGATE BASE AND ¾" JOINT FILLER IS INCLUDED IN CONTRACT UNIT BID PRICE FOR CONCRETE APPROACH PAVEMENT.

MISSOURI HIGHWAYS AND TRANSPORTATION COMMISSION

CONCRETE APPROACH PAVEMENT
FOR TWO-LANE PAVEMENTS

DATE:_____ | EFFECTIVE: 07-01-2004 | **504.00F** | 1/3

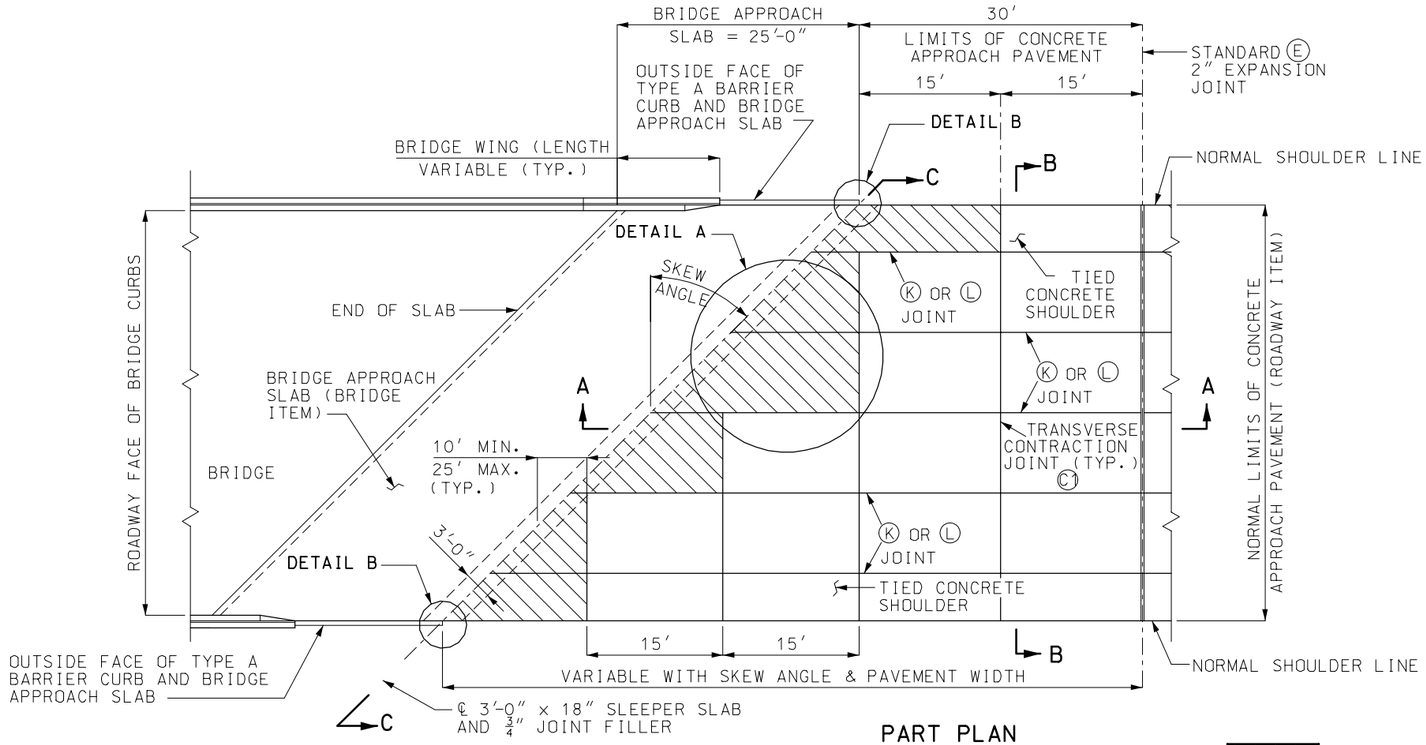

PART PLAN
(SKEWED)

PARTIAL PANELS

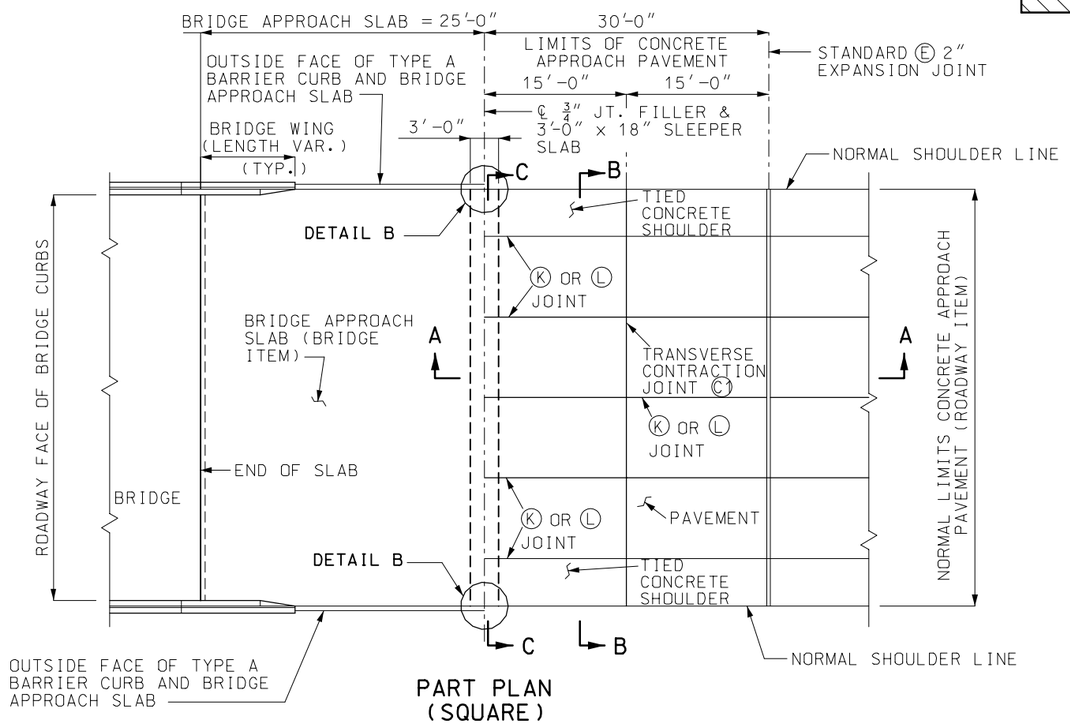

PART PLAN
(SQUARE)

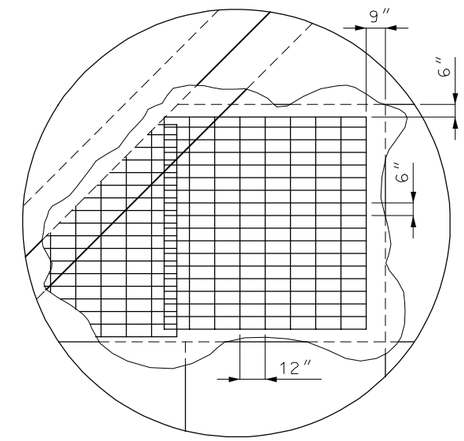

DETAIL A

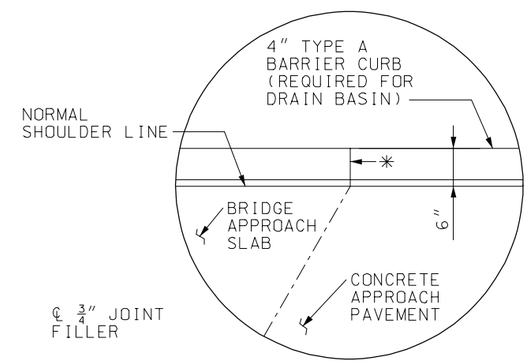

DETAIL B

✳ USE ¾" JOINT FILLER BETWEEN TYPE A CURBS

GENERAL NOTES:

FOR SECTIONS A-A, B-B AND C-C, SEE SHEET 3 OF 3.

MISSOURI HIGHWAYS AND TRANSPORTATION COMMISSION

CONCRETE APPROACH PAVEMENT

FOR MULTI-LANE PAVEMENTS

DATE:	EFFECTIVE: 07-01-2004	504.00F	2/3

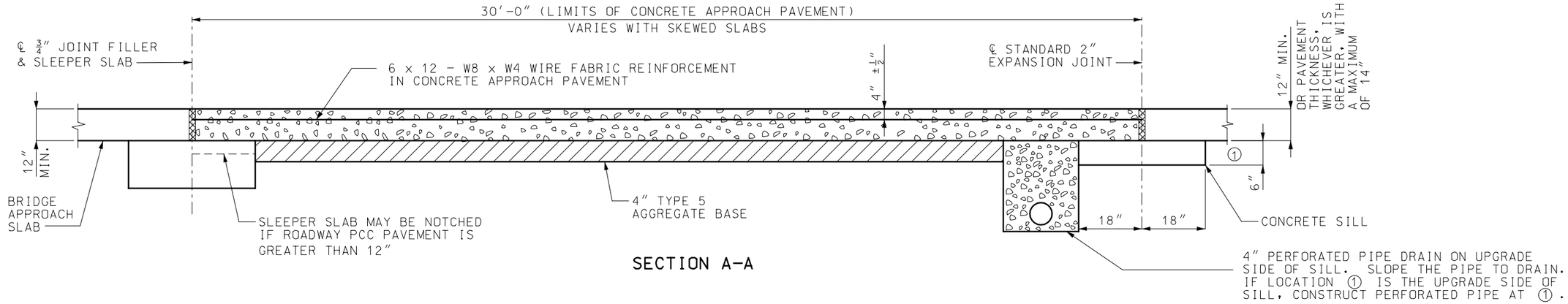

SECTION A-A

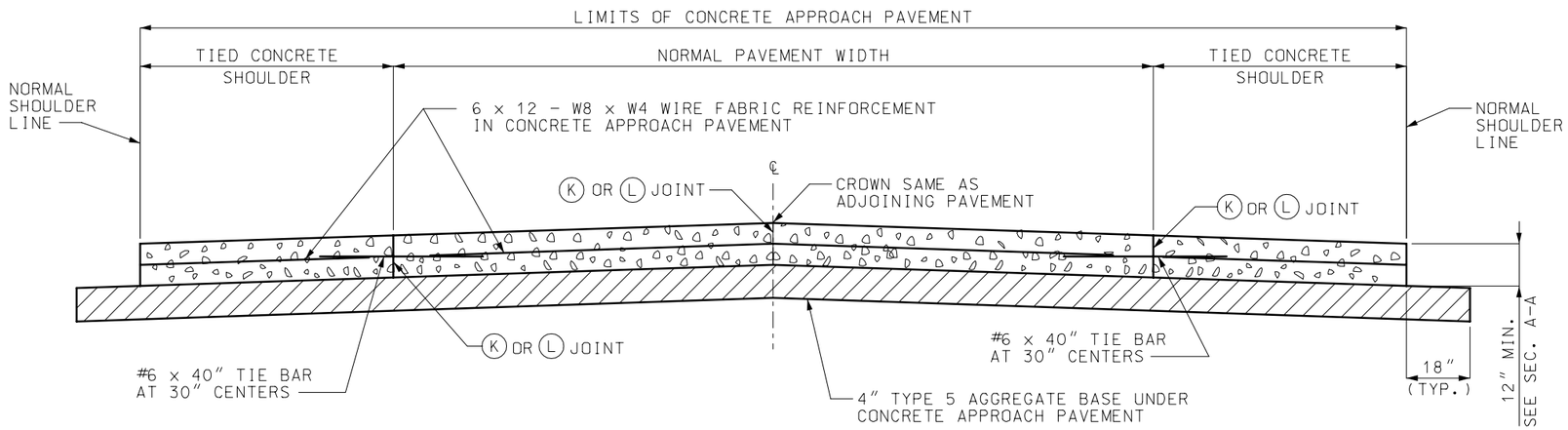

SECTION B-B

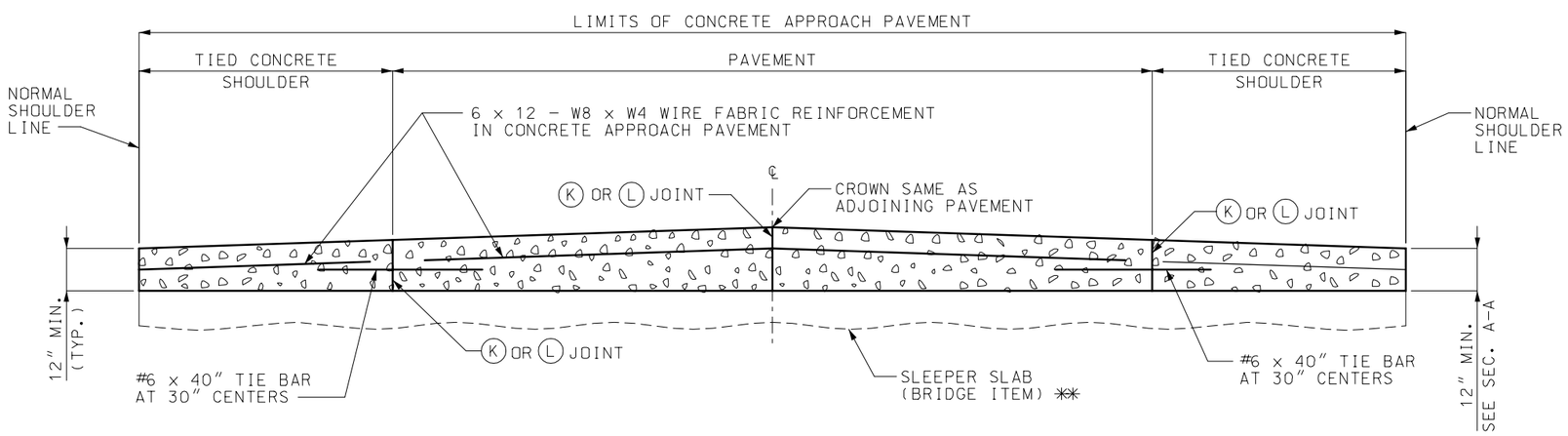

SECTION C-C

** TOP OF SLEEPER SLAB MAY BE FLAT OR CROWNED. SEE BRIDGE PLANS.

GENERAL NOTES:

FOR LOCATIONS OF SECTIONS A-A, B-B AND C-C, SEE SHEETS 1 AND 2.

SEE STANDARD DRAWING 605.10 FOR PIPE OUTLET DETAIL FROM SHOULDER POINT TO INSLOPE.

MISSOURI HIGHWAYS AND TRANSPORTATION COMMISSION

CONCRETE APPROACH PAVEMENT

DATE:_____ EFFECTIVE:07-01-2004 **504.00F** 3/3