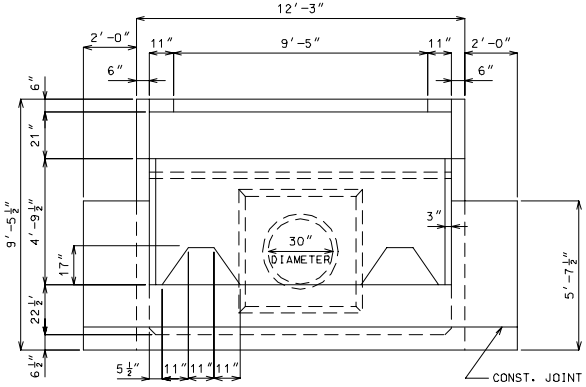

DOWNSTREAM ELEVATION

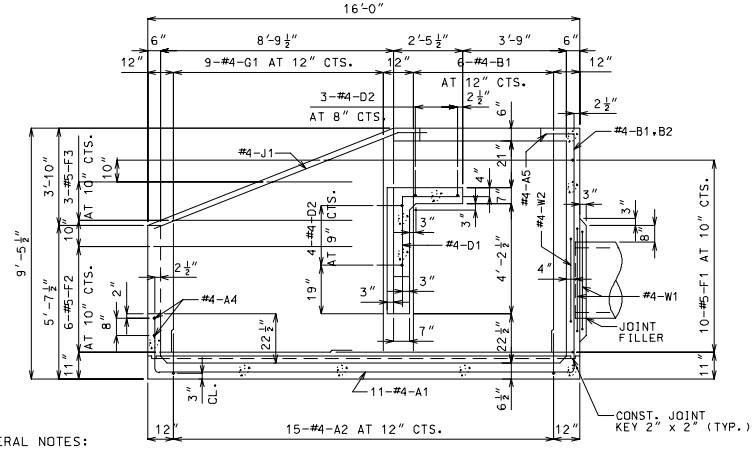

SECTION A – A

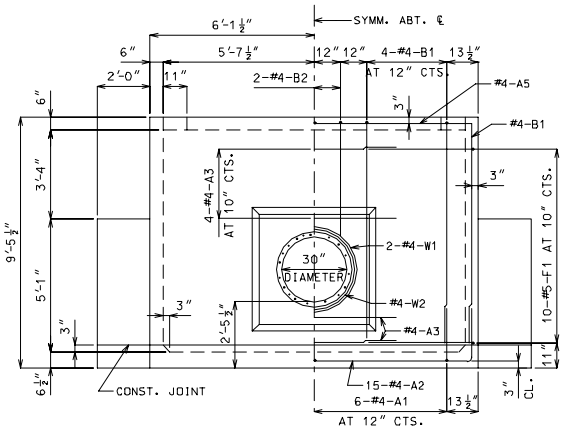

UPSTREAM ELEVATION

NOTE: BEND OR CUT A1 BARS IN FIELD TO CLEAR PIPE.

GENERAL NOTES:

DESIGN UNIT STRESSES

CLASS B CONCRETE f'c = 3,000 psi
REINFORCING STEEL (GRADE 60) fy = 60,000 psi

REINFORCING STEEL

MINIMUM CLEARANCE TO REINFORCING STEEL SHALL BE 1½" UNLESS SHOWN OTHERWISE.

DIMENSIONS

DRAWINGS ARE NOT TO SCALE. FOLLOW DIMENSIONS.

ESTIMATED QUANTITIES		
ITEM		TOTAL
CLASS B CONCRETE	CU. YD.	13.2
REINFORCING STEEL	LBS.	1,170

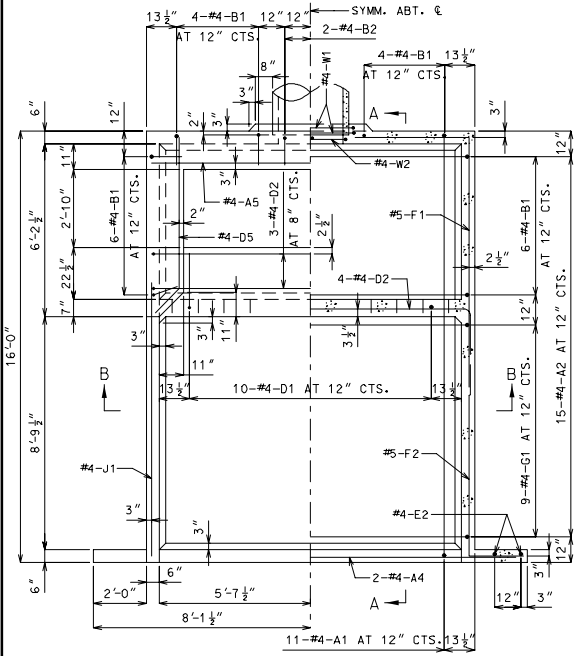

HALF PLAN HALF HORIZONTAL SECTION

COMPLETE BILL OF REINFORCING STEEL															
NO. REQ'D	MARK NO. SIZE	MARK	SHAPE NO.	VARIES (V)	NO. EACH	DIMENSIONS B FT. IN.	C FT. IN.	D FT. IN.	E FT. IN.	F FT. IN.	H FT. IN.	K FT. IN.	NOMINAL LENGTH FT. IN.	ACTUAL LENGTH FT. IN.	WEIGHT LBS.
11	4	A1	11				2-0½	15-6	0-20½				19-3	19-1	140
15	4	A2	11				0-20½	11-10	0-20½				15-3	15-1	151
6	4	A3	20			5-4							5-4	5-4	21
2	4	A4	20			13-3							13-3	13-3	18
1	4	A5	20			11-9							11-9	11-9	8
20	4	B1	19			8-5½	0-13						9-7	9-5	126
3	4	B2	19			4-0	0-13						5-1	5-0	10
10	4	D1	19			4-4	2-0½						6-5	6-3	42
7	4	D2	11				0-12	11-10	0-12				13-10	13-8	64
1	4	D3	15			2-11	4-7	2-11	2-6	0-18	2-6	0-18	10-5	10-4	7
2	4	D4	14			0-12	0-7	3-0			2-6	0-20	4-7	4-5	6
2	4	D5	23			0-18⅜	5-7				0-13	0-13	7-1	7-1	9
2	4	E1	20			3-0							3-0	3-0	4
4	4	E2	20			5-3							5-3	5-3	14
20	5	F1	19			8-8⅜	4-2½						12-11	12-9	266
12	5	F2	19			2-1	8-1						10-2	10-1	126
6	5	F3	20	V	2	3-0⅞							3-1	3-1	
						7-0⅞	(INCREMENT = 24 INCHES)						7-1	7-1	32
18	4	G1	20	V	2	5-1⅜							5-1	5-1	
						8-5⅜	(INCREMENT = 5 INCHES)						8-5	8-5	81
2	4	J1	20			10-11							10-11	10-11	15
2	4	W1	16			3-6							11-10	11-10	16
1	4	W2	16			2-11							10-0	10-0	7

BENDING DIAGRAMS

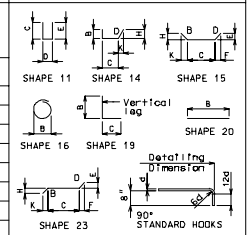

ALL STANDARD HOOKS AND BENDS OTHER THAN 180 DEG. TO BE BENT WITH SAME PROCEDURE AS FOR 90 DEG. STANDARD HOOKS.

HOOKS AND BENDS SHALL BE IN ACCORDANCE WITH THE PROCEDURES AS SHOWN ON THIS SHEET.

NOMINAL LENGTHS ARE BASED ON OUT TO OUT DIMENSIONS SHOWN IN BENDING DIAGRAMS AND ARE LISTED FOR FABRICATORS USE.

PAYWEIGHTS ARE BASED ON ACTUAL LENGTHS.

LENGTH = TOTAL LENGTHS ARE MEASURED ALONG CENTERLINE BAR TO THE NEAREST INCH.

V - BAR DIMENSIONS VARY IN EQUAL INCREMENTS BETWEEN DIMENSIONS SHOWN ON THIS LINE AND THE FOLLOWING LINE.

NO.EA. = NUMBER OF BARS OF EACH LENGTH.

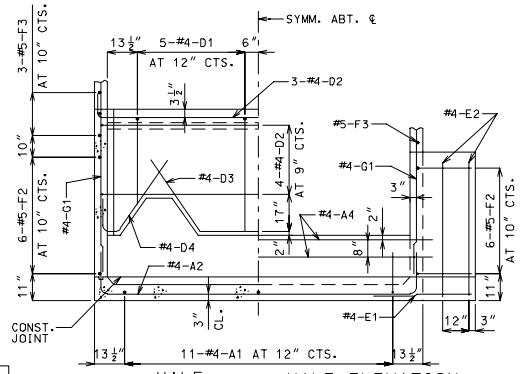

HALF SECTION B-B HALF ELEVATION OF LOWER BAFFLE AND WING

NOTE: BEND OR CUT D1 BARS IN FIELD TO CLEAR NOTCH IN BAFFLE WALL.

MISSOURI HIGHWAY AND TRANSPORTATION COMMISSION

PIPE CULVERT HEADWALL
ENERGY DISSIPATOR (IMPACT TYPE) FOR 30" CONCRETE PIPE

DATE _____ | EFFECTIVE: 07-01-2001 | 604.12E | 1/1