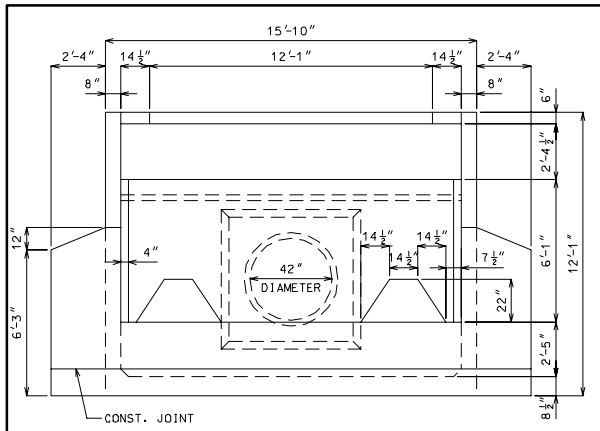


DOWNSTREAM ELEVATION

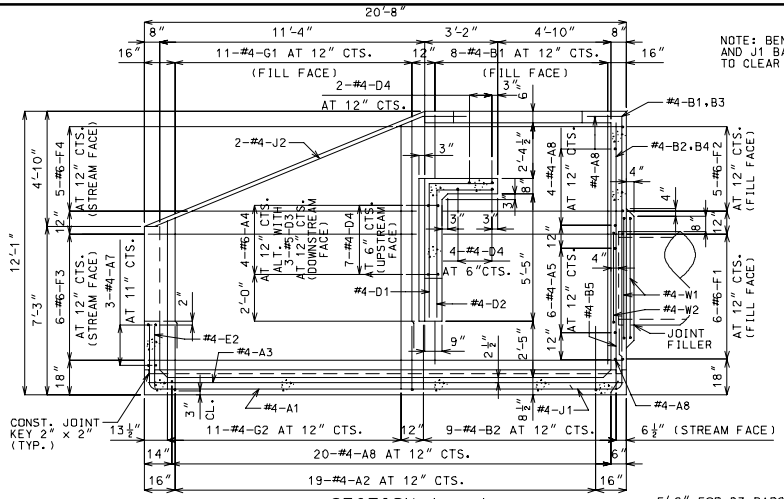


SECTION A – A

NOTE: BEND OR CUT A1 AND J1 BARS IN FIELD TO CLEAR PIPE.

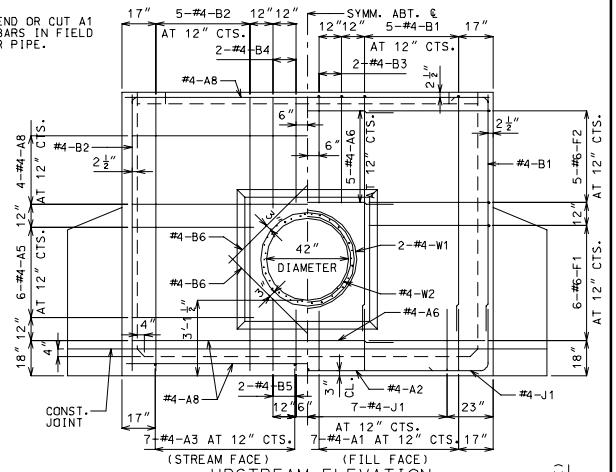


UPSTREAM ELEVATION

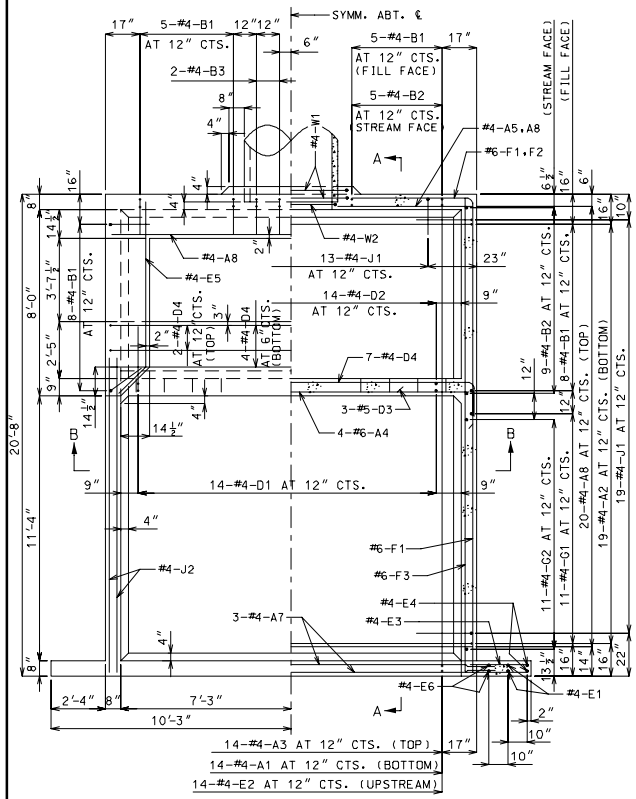


HALF PLAN HALF HORIZONTAL SECTION

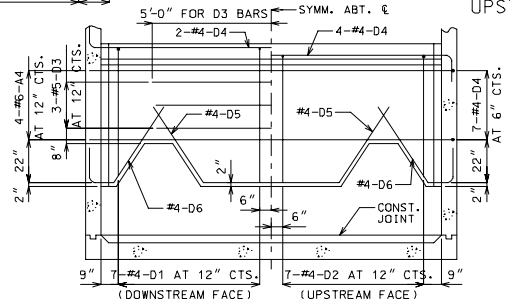


SECTION B-B

NOTE: BEND OR CUT D1 AND D2 BARS IN FIELD TO CLEAR NOTCH IN BAFFLE WALL.

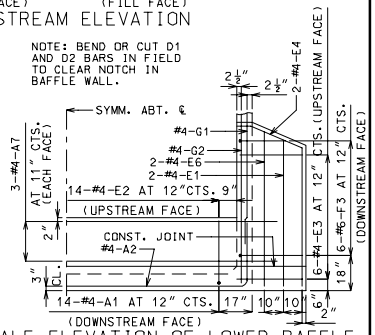


HALF ELEVATION OF LOWER BAFFLE AND WING

COMPLETE BILL OF REINFORCING STEEL

| NO. REQ'D | MARK NO. SIZE | MARK | SHAPE NO. VARIES (V) | NO. EACH | DIMENSIONS B FT. IN. | C FT. IN. | D FT. IN. | E FT. IN. | F FT. IN. | H FT. IN. | K FT. IN. | NOMINAL LENGTH FT. IN. | ACTUAL LENGTH FT. IN. | WEIGHT LBS. |
|---|---|---|---|---|---|---|---|---|---|---|---|---|---|---|
| 14 | 4 | A1 | 11 | | | 2-9 | 20-4 | 2-9 | | | | 25-10 | 25-8 | 240 |
| 19 | 4 | A2 | 11 | | | 2-10 | 15-7 | 2-10 | | | | 21-3 | 21-1 | 268 |
| 14 | 4 | A3 | 20 | | 20-4 | | | | | | | 20-4 | 20-4 | 190 |
| 4 | 6 | A4 | 20 | | 15-7 | | | | | | | 15-7 | 15-7 | 94 |
| 12 | 4 | A5 | 20 | | 5-7 | | | | | | | 5-7 | 5-7 | 45 |
| 6 | 4 | A6 | 20 | | 6-5 | | | | | | | 6-5 | 6-5 | 26 |
| 6 | 4 | A7 | 20 | | 16-9 | | | | | | | 16-9 | 16-9 | 67 |
| 26 | 4 | A8 | 20 | | 15-7 | | | | | | | 15-7 | 15-7 | 271 |
| 26 | 4 | B1 | 19 | | 9-11 1/2 | 0-19 | | | | | | 11-7 | 11-5 | 198 |
| 28 | 4 | B2 | 20 | | 11-10 | | | | | | | 11-10 | 11-10 | 221 |
| 4 | 4 | B3 | 19 | | 4-10 | 0-19 | | | | | | 6-5 | 6-4 | 17 |
| 4 | 4 | B4 | 20 | | 4-10 | | | | | | | 4-10 | 4-10 | 13 |
| 4 | 4 | B5 | 20 | | 2-6 | | | | | | | 2-6 | 2-6 | 7 |
| 4 | 4 | B6 | 20 | | 5-0 | | | | | | | 5-0 | 5-0 | 13 |
| 14 | 4 | D1 | 19 | | 5-9 1/2 | 2-10 1/2 | | | | | | 8-8 | 8-7 | 80 |
| 14 | 4 | D2 | 19 | | 5-5 1/2 | 2-6 | | | | | | 8-0 | 7-10 | 73 |
| 3 | 5 | D3 | 20 | | 10-0 | | | | | | | 10-0 | 10-0 | 31 |
| 13 | 4 | D4 | 11 | | | 0-12 | 15-7 | 0-12 | | | | 17-7 | 17-5 | 151 |
| 2 | 4 | D5 | 15 | | 3-7 3/8 | 5-10 | 3-7 3/8 | 3-0 1/2 | 2-0 | 3-0 1/2 | 2-0 | 13-1 | 13-0 | 17 |
| 4 | 4 | D6 | 14 | | 0-12 | 0-13 1/2 | 3-7 3/8 | | | 3-0 1/2 | 2-0 | 5-9 | 5-7 | 15 |
| 4 | 4 | E1 | 20 | | 6-5 | | | | | | | 6-5 | 6-5 | 17 |
| 14 | 4 | E2 | 20 | | 2-10 | | | | | | | 2-10 | 2-10 | 26 |
| 12 | 4 | E3 | 20 | | 2-9 | | | | | | | 2-9 | 2-9 | 22 |
| 4 | 4 | E4 | 25 | | 6-0 | 2-5 | 0-6 1/2 | | | 0-11 1/2 | 2-2 1/2 | 8-11 | 8-10 | 24 |
| 2 | 4 | E5 | 15 | | 2-2 3/8 | 7-3 1/2 | | | | 0-19 | 0-19 | 9-6 | 9-6 | 13 |
| 4 | 4 | E6 | 20 | | 6-9 | | | | | | | 6-9 | 6-9 | 18 |
| 12 | 6 | F1 | 19 | | 20-5 | 5-5 1/2 | | | | | | 25-11 | 25-9 | 464 |
| 10 | 6 | F2 | 19 | V 2 | 9-8 | 5-5 1/2 | | | | | | 15-2 | 15-0 | |
| | | | | | 19-6 | 5-5 1/2 | (INCREMENT = 29 1/2) | | | | | 25-0 | 24-10 | 299 |
| 12 | 6 | F3 | 19 | | 20-5 | 2-9 | | | | | | 23-2 | 23-0 | 415 |
| 10 | 6 | F4 | 20 | V 2 | 9-8 | | | | | | | 9-8 | 9-8 | |
| | | | | | 19-6 | | (INCREMENT = 29 1/2) | | | | | 19-6 | 19-6 | 219 |
| 22 | 4 | G1 | 20 | V 2 | 5-7 | | | | | | | 5-7 | 5-7 | |
| | | | | | 9-6 | | (INCREMENT = 4 1/2) | | | | | 9-6 | 9-6 | 111 |
| 22 | 4 | G2 | 20 | V 2 | 7-7 | | | | | | | 7-7 | 7-7 | |
| | | | | | 11-6 | | (INCREMENT = 4 1/2) | | | | | 11-6 | 11-6 | 140 |
| 51 | 4 | J1 | 19 | | 3-3 | 3-3 | | | | | | 6-6 | 6-5 | 219 |
| 4 | 4 | J2 | 20 | | 13-10 | | | | | | | 13-10 | 13-10 | 37 |
| 2 | 4 | W1 | 16 | | 4-7 1/2 | | | | | | | 15-5 | 15-5 | 21 |
| 1 | 4 | W2 | 16 | | 3-10 1/2 | | | | | | | 13-1 | 13-1 | 9 |

ESTIMATED QUANTITIES

| ITEM | | TOTAL |
|---|---|---|
| CLASS B CONCRETE | CU. YD. | 28.2 |
| REINFORCING STEEL | LBS. | 4,090 |

BENDING DIAGRAMS

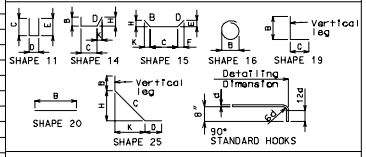


ALL STANDARD HOOKS AND BENDS OTHER THAN 180 DEG. TO BE BENT WITH SAME PROCEDURE AS FOR 90 DEG. STANDARD HOOKS.

HOOKS AND BENDS SHALL BE IN ACCORDANCE WITH THE PROCEDURES AS SHOWN ON THIS SHEET.

NOMINAL LENGTHS ARE BASED ON OUT TO OUT DIMENSIONS SHOWN IN BENDING DIAGRAMS AND ARE LISTED FOR FABRICATORS USE.

PAYWEIGHTS ARE BASED ON ACTUAL LENGTHS.

LENGTH = TOTAL LENGTHS ARE MEASURED ALONG CENTERLINE BAR TO THE NEAREST INCH.

V – BAR DIMENSIONS VARY IN EQUAL INCREMENTS BETWEEN DIMENSIONS SHOWN ON THIS LINE AND THE FOLLOWING LINE.

NO.EA. = NUMBER OF BARS OF EACH LENGTH.

GENERAL NOTES:

DESIGN UNIT STRESSES

CLASS B CONCRETE f'c = 3,000 psi
REINFORCING STEEL (GRADE 60) fy = 60,000 psi

REINFORCING STEEL

MINIMUM CLEARANCE TO REINFORCING STEEL SHALL BE 1 1/2" UNLESS SHOWN OTHERWISE.

DIMENSIONS

DRAWINGS ARE NOT TO SCALE. FOLLOW DIMENSIONS.

MISSOURI HIGHWAY AND TRANSPORTATION COMMISSION

# PIPE CULVERT HEADWALL
## ENERGY DISSIPATOR (IMPACT TYPE) FOR 42" CONCRETE PIPE

DATE _____ | EFFECTIVE: 07-01-2001 | 604.14E | 1/1