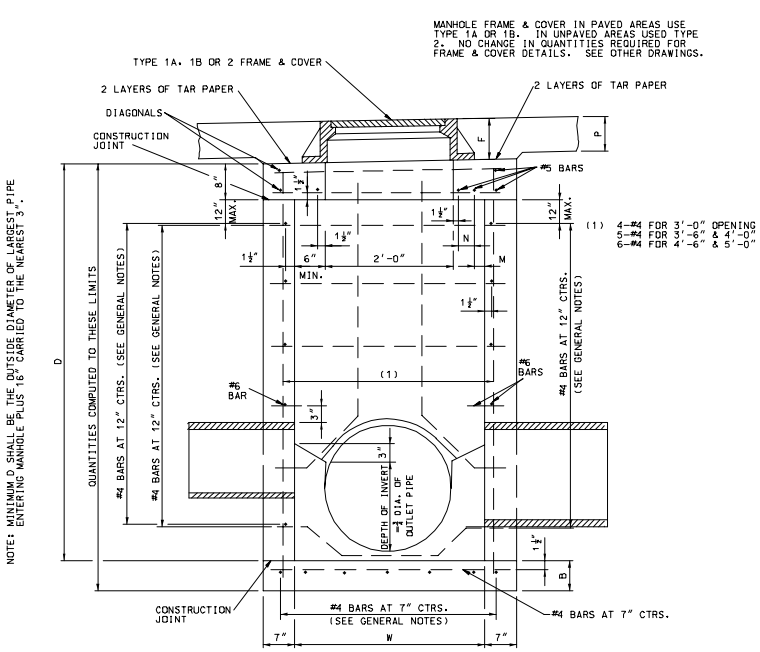

NOTE:
CUT HORIZONTAL BARS AND BEND HORIZONTAL AND VERTICAL BARS AROUND PIPES.

SECTION A-A

VARIABLE DIMENSIONS					
SIZE OF PIPE	W	T	B	M	N
≤ 24"	3'-0"	4'-2"	7"	VARIABLE	2½"
30"	3'-6"	4'-8"	7"		5½"
36"	4'-0"	5'-2"	7"		8"
42"	4'-6"	5'-8"	8"		5½" *
48"	5'-0"	6'-2"	8"		7"*
* 4-#5 BARS ADDED					

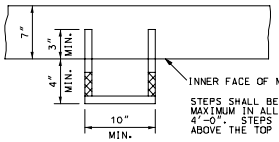

STEPS SHALL BE PLACED AT VERTICAL INTERVALS OF 16" MAXIMUM IN ALL MANHOLES HAVING A DEPTH OF MORE THAN 4'-0". STEPS SHALL BEGIN AT AN ELEVATION 6" ABOVE THE TOP OF THE OUTLET PIPE.

STEPS SHALL BE SET LEVEL AND IN VERTICAL ALIGNMENT.

NO DIRECT PAYMENT WILL BE MADE FOR MANHOLE STEPS.

STEP INSTALLATION

QUANTITIES								
		TO & INCLUDING 20' DEPTH				20' TO & INCLUDING 30' DEPTH		
SIZE (W)		D=3'-3"	D=4'-3"	ADD OR SUBTRACT FOR EACH 1 FT.	ADD OR SUBTRACT FOR EACH 3 IN.	ADD OR SUBTRACT FOR EACH 1 FT.	ADD OR SUBTRACT FOR EACH 3 IN.	ADDITIONAL STEEL IN BOTTOM DIFF. IN #4 & #6 BARS
3'-0" X 3'-0"	C	1.62	1.93	0.31	0.08	0.31	0.08	
	S	157.90	176.80	18.60	2.00	20.64	5.16	30.14
3'-0" X 3'-6"	C	1.77	2.11	0.33	0.08	0.33	0.08	
	S	173.80	194.60	20.60	2.30	23.12	5.78	34.85
3'-0" X 4'-0"	C	1.93	2.28	0.35	0.09	0.35	0.09	
	S	187.10	208.60	21.30	2.30	24.27	6.07	39.56
3'-0" X 4'-6"	C	2.16	2.53	0.38	0.09	0.38	0.09	
	S	211.20	234.70	23.30	2.70	26.75	6.69	44.28
3'-0" X 5'-0"	C	2.32	2.71	0.40	0.10	0.40	0.10	
	S	219.60	243.80	24.00	2.70	27.90	6.97	48.97
3'-6" X 3'-6"	C	1.94	2.29	0.35	0.09	0.35	0.09	
	S	192.40	215.10	22.70	2.70	25.60	6.40	40.27
3'-6" X 4'-0"	C	2.10	2.48	0.38	0.09	0.38	0.09	
	S	204.30	227.70	23.40	2.70	26.75	6.69	45.69
3'-6" X 4'-6"	C	2.35	2.75	0.40	0.10	0.40	0.10	
	S	230.00	255.50	25.30	3.00	29.23	7.31	51.11
3'-6" X 5'-0"	C	2.53	2.95	0.42	0.10	0.42	0.10	
	S	240.90	267.10	26.00	3.00	30.38	7.60	56.53
4'-0" X 4'-0"	C	2.28	2.68	0.40	0.10	0.40	0.10	
	S	216.70	240.80	24.10	2.70	27.90	6.97	51.83
4'-0" X 4'-6"	C	2.55	2.97	0.42	0.10	0.42	0.10	
	S	246.40	272.60	26.00	3.00	30.38	7.60	57.96
4'-0" X 5'-0"	C	2.74	3.18	0.44	0.11	0.44	0.11	
	S	255.60	282.50	26.70	3.00	31.53	7.88	64.10
4'-6" X 4'-6"	C	2.75	3.19	0.44	0.11	0.44	0.11	
	S	276.80	304.90	28.00	3.30	32.86	8.22	64.81
4'-6" X 5'-0"	C	2.94	3.41	0.46	0.12	0.46	0.12	
	S	289.40	318.20	28.70	3.30	34.01	8.50	71.66
5'-0" X 5'-0"	C	3.15	3.64	0.48	0.12	0.48	0.12	
	S	299.80	329.30	29.40	3.30	35.16	8.79	79.23

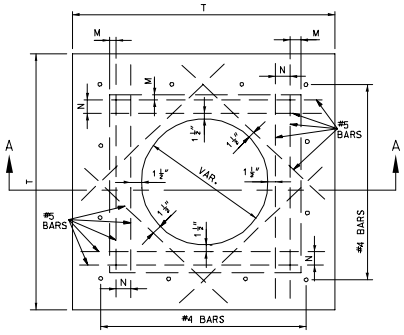

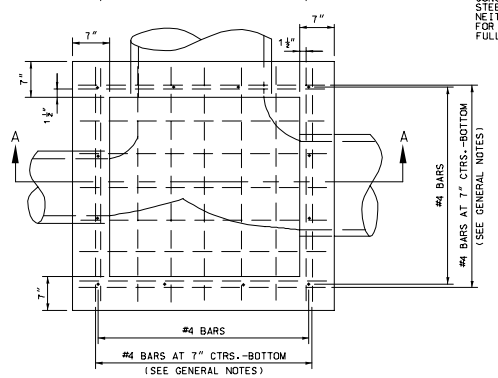

FOR PIPE OPENINGS								
	PIPE SIZES							
	12"	15"	18"	24"	30"	36"	42"	48"
CU. YDS. CONC. TO DEDUCT	0.03	0.04	0.06	0.11	0.16	0.23	0.31	0.40
ADDITIONAL STEEL REQUIRED FOR PIPE OPENING								
WIDTH OF WALL REQUIRED FOR PIPE				3'-0"	3'-6"	4'-0"	4'-6"	5'-0"
LENGTH OF #6 BAR REQUIRED				4'-0"	4'-6"	5'-0"	5'-6"	6'-0"
WEIGHT OF BAR LBS.				6.0	6.8	7.5	8.3	9.0

NOTE:
CONCRETE QUANTITIES IN TABLE INCLUDE INVERT. THE QUANTITY OF STEEL FOR 3" OF "D" IS NOT ½ OF THAT FOR 1 FOOT OF "D", NEITHER IS THE QUANTITY FOR 6" OF "D" EQUAL TO ½ THAT FOR 1 FOOT OF "D". SO USE QUANTITY IN 1 FOOT COLUMN FOR FULL FEET AND IN 3" COLUMN FOR FRACTIONAL FEET.

TO AND INCLUDING 20 FOOT DEPTH

NOTE:
TO COMPUTE THE QUANTITIES FOR "D"s NOT SHOWN. REFER TO TABLE FOR THE SIZE OF MANHOLE REQUIRED. THEN TO THESE QUANTITIES ADD THE QUANTITIES SHOWN FOR 1 FOOT TIMES THE NUMBER OF FULL FOOT INCREMENTS IN THE ADDITIONAL "D" REQUIRED. THEN ADD THE QUANTITIES GIVEN FOR 3" TIMES THE NUMBER OF 3" INCREMENTS IN THE REMAINING FOOT OF "D".

FOR EXAMPLE: QUANTITIES FOR 3'-0" X 4'-0" MANHOLE WITH 6'-9" "D" HAVING 1-18", 1-24" & 1-36" PIPE OPENINGS ARE DETERMINED AS FOLLOWS:

"D" REQUIRED = 6'-9"
"D" GIVEN IN TABLE = 4'-3"
"D" ADDITIONAL = 2'-6"

	CONC.	STEEL
FROM TABLE FOR 4'-3" "D".....	2.28	208.6
ADD (2 X QUANTITIES FOR 1 FOOT).....	0.70	42.6
ADD (6" = 2 X 3") (2 X QUANTITIES FOR 3").....	0.18	4.6
GROSS.....	3.16	255.8
DEDUCT CONCRETE FOR THE PIPE OPENINGS.....	0.40	
ADD STEEL FOR PIPE OPENING 2-3' & 1-4' WALLS.....		19.5
TOTAL.....	2.76	275.3
USE.....	2.80	280.0

MORE THAN 20 FOOT TO AND INCLUDING 30 FOOT DEPTH

FIRST, COMPUTE QUANTITIES FOR 20' DEPTH FROM THE TABLE "TO AND INCLUDING 20' DEPTHS".

FOR EXAMPLE: QUANTITIES FOR 3'-0" X 4'-0" MANHOLE WITH 20'-0" "D" HAVING 1-18", 1-24" AND 1-36" PIPE OPENINGS ARE DETERMINED AS FOLLOWS:

"D" REQUIRED = 20'-0"
"D" GIVEN IN TABLE = 4'-3"
"D" ADDITIONAL = 15'-9"

	CONC.	STEEL
FROM TABLE FOR 4'-3" "D".....	2.28	208.6
ADD (15 X QUANTITIES FOR 1 FOOT).....	5.25	319.5
ADD (9"= 3X3")(3 X QUANTITY FOR 3").....	0.27	6.9
GROSS.....	7.80	535.0
DEDUCT CONCRETE FOR THE PIPE OPENINGS.....	0.40	
ADD STEEL FOR PIPE OPENING 2-3' & 1-4' WALLS.....		19.50
SUB-TOTAL (20' DEPTH).....	7.40	554.5

SECOND, COMPUTE QUANTITIES FOR DEPTHS BEYOND 20 FEET TO A MAXIMUM OF 30 FEET USING THE TABLE "20-FOOT TO AND INCLUDING 30-FOOT DEPTH". AND ADD TO THE QUANTITIES FOR 20-FOOT DEPTH. ALSO ADD THE DIFFERENCE IN STEEL IN THE BOTTOM DUE TO AN INCREASE IN SIZE OF BARS FROM #4 TO #6 BARS ON 7-INCH CENTERS.

FOR EXAMPLE:

"D" REQUIRED = 30'-0"
"D" COMPUTED = 20'-0"
"D" ADDITIONAL = 10'-0"

ADD CONCRETE (10 X QUANTITY FOR 1 FOOT).....	3.50	
ADD STEEL (10 X QUANTITY FOR 1 FOOT).....		242.70
ADD STEEL (ADDITIONAL STEEL IN BOTTOM).....		39.56
TOTAL (30 FT. DEPTH).....	10.90	836.16
USE.....	10.9	840.0

GENERAL NOTES:

THE MAXIMUM DEPTH OF MANHOLE USING #4 HORIZONTAL BARS AT 12" CENTERS IS 20'.

OVER 20' DEPTH, HORIZONTAL BARS SHALL BE INCREASED TO A #5 BAR AT 10" CENTERS TO A MAXIMUM DEPTH OF 30'.

OVER 30' DEPTH WILL REQUIRE A SPECIAL DESIGN.

BOTTOM STEEL AT MORE THAN 20' DEPTH TO A MAXIMUM DEPTH OF 30' IS INCREASED TO #6 BARS AT 7" CENTERS.

MISSOURI HIGHWAY AND TRANSPORTATION COMMISSION

CONCRETE MANHOLES

DATE:_____ EFFECTIVE: 04-01-1983 604.30F 1/1