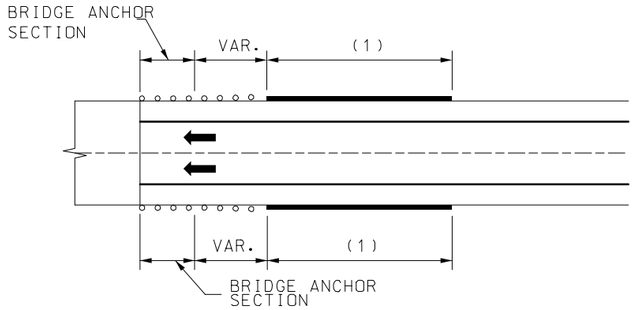


TWO-WAY PAVEMENT - USE GUARDRAIL AT ALL FOUR CORNERS.

## AT BRIDGE ENDS

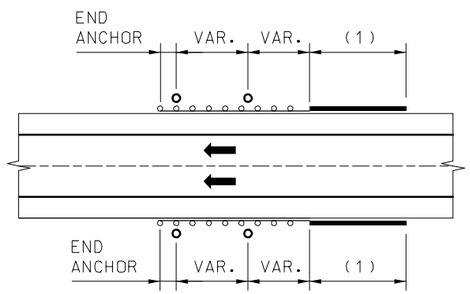


SHOULDER INSTALLATION WITH DIVIDED PAVEMENT

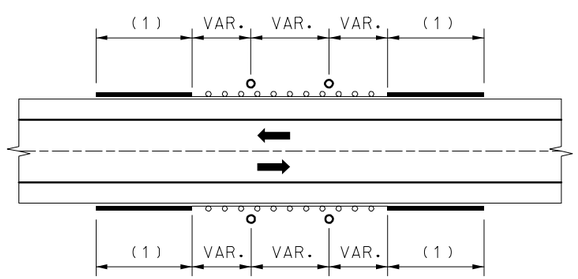


SHOULDER INSTALLATION WITH TWO-WAY PAVEMENT

## AT OBSTACLES

FOR MULTIPLE OBSTACLES - SPECIFY VAR. IN 12'-6" INCREMENTS.

## GUARDRAIL LOCATIONS

LEGEND

GUARDRAIL

OBSTACLE

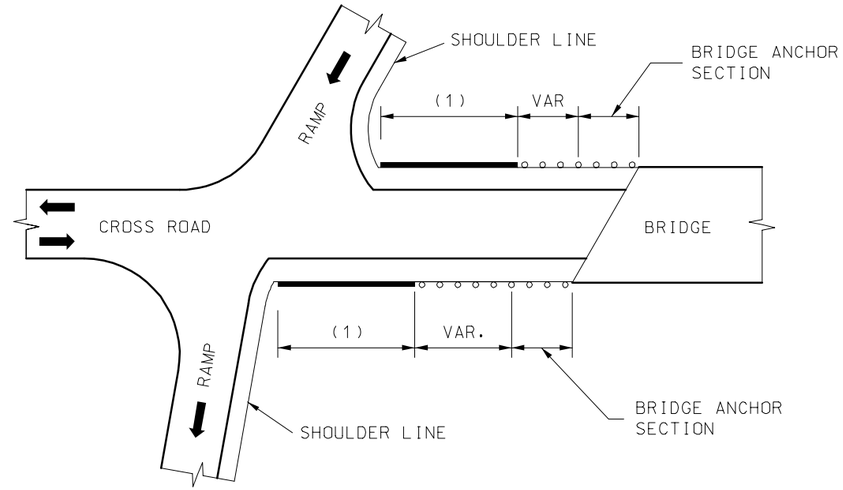


BRIDGE ENDS

## GUARDRAIL LOCATION AT INTERCHANGE

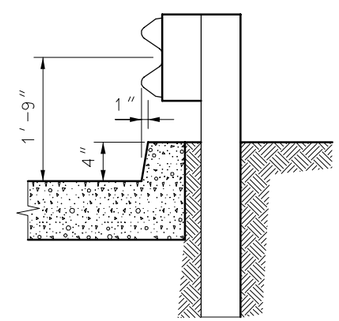


GUARDRAIL AT CURBS (3)

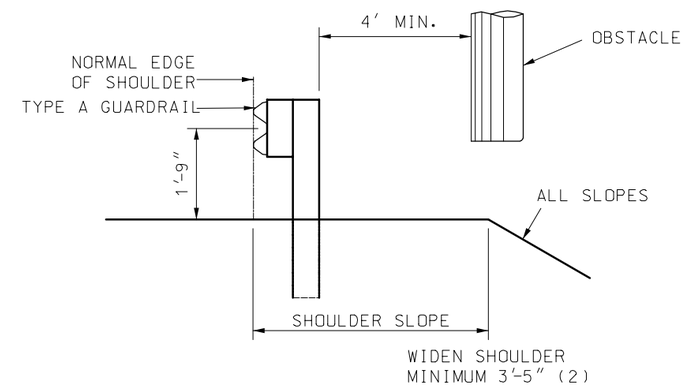


LOCATION OTHER THAN ℄ MEDIAN

LATERAL PLACEMENT OF GUARDRAIL FOR SHOULDER INSTALLATION

(1) APPROVED TYPE A CRASHWORTHY END TERMINAL.
(2) SHOULDER WIDENING SHALL CONSIST OF EMBANKMENT MATERIAL COMPACTED IN ACCORDANCE WITH SECTION 203.4 OF THE STANDARD SPECIFICATIONS.
(3) WHEN GUARDRAIL IS CONSTRUCTED OVER CURBS, THE CURBS SHALL BE CONSTRUCTED AS SHOWN.

MISSOURI HIGHWAYS AND TRANSPORTATION COMMISSION

# GUARDRAIL

DATE:_____ EFFECTIVE: 07-01-2004 606.00AQ 1/16

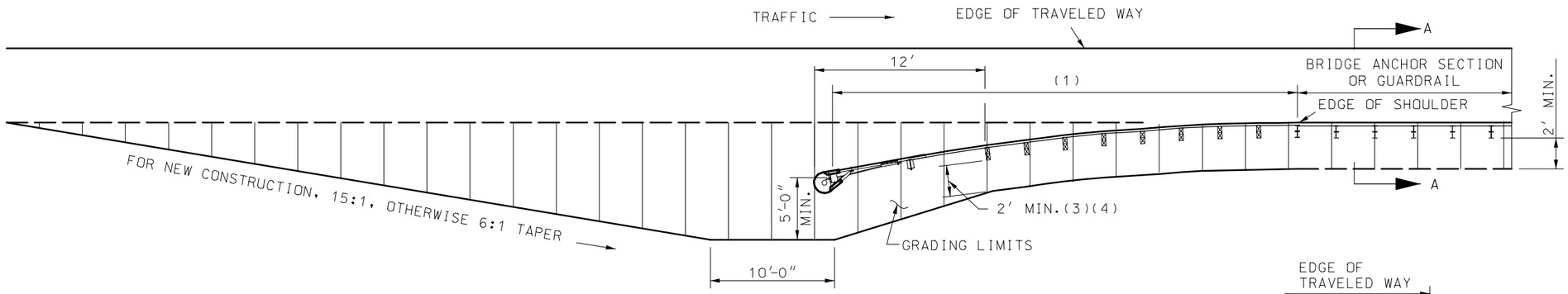


## GRADING LIMITS FOR TYPE A FLARED CRASHWORTHY END TERMINAL

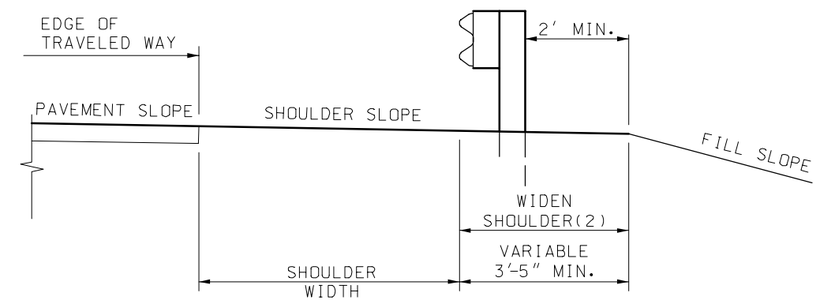


## SECTION A–A

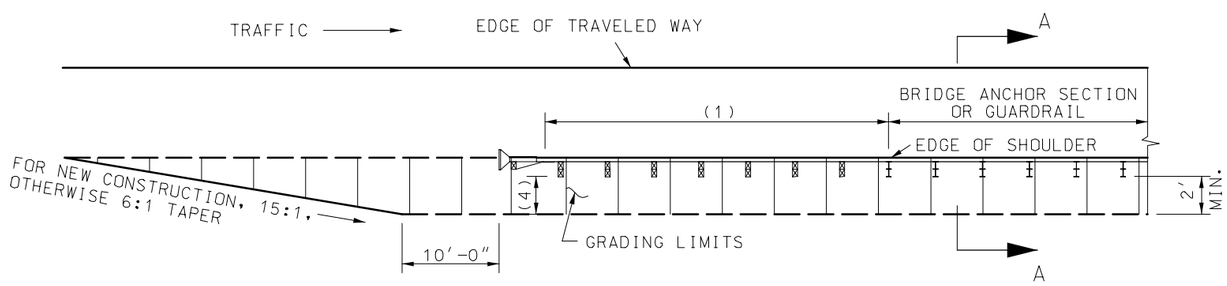


## GRADING LIMITS FOR TYPE A NON-FLARED CRASHWORTHY END TERMINAL

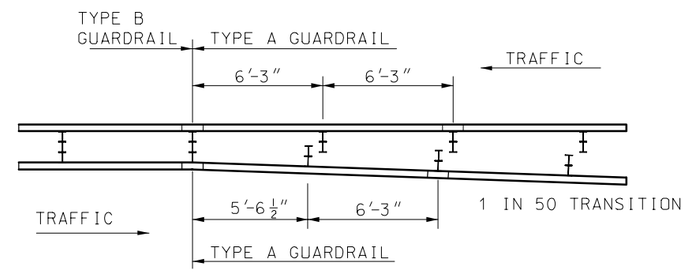


## DETAIL FOR TRANSITIONING BETWEEN TYPE A AND TYPE B GUARDRAIL

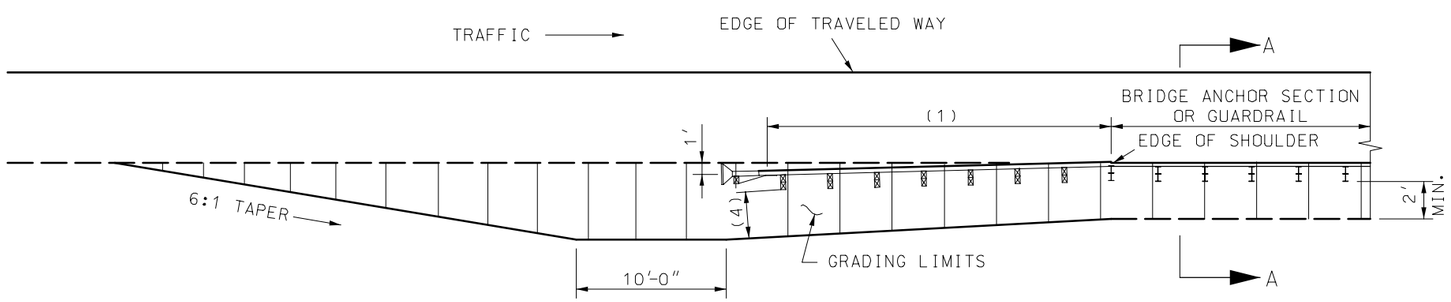


## GRADING LIMITS FOR TYPE A NON-FLARED OFFSET CRASHWORTHY END TERMINAL

GENERAL NOTES:

THE CONTRACTOR SHALL PROVIDE THE ENGINEER WITH APPROVED SHOP DRAWINGS OF THE APPROVED CRASH-WORTHY END TERMINAL.

END ANCHORS SHALL BE INSTALLED ON ENDS OF GUARDRAIL RUNS WHERE CRASHWORTHY END TERMINAL IS NOT REQUIRED.

(1) APPROVED TYPE A CRASHWORTHY END TERMINAL.
(2) SHOULDER WIDENING SHALL CONSIST OF EMBANKMENT MATERIAL COMPACTED IN ACCORDANCE WITH SECTION 203.4 OF THE STANDARD SPECIFICATIONS.
(3) THE SLOPE SHOULD BREAK BEHIND THIRD POST.
(4) AS PER MANUFACTURER'S SPECIFICATIONS, 2′ MINIMUM. NO DIRECT PAY.

MISSOURI HIGHWAYS AND TRANSPORTATION COMMISSION

**GUARDRAIL**

DATE:_____ | EFFECTIVE: 07-01-2004 | **606.00AQ** | 2/16

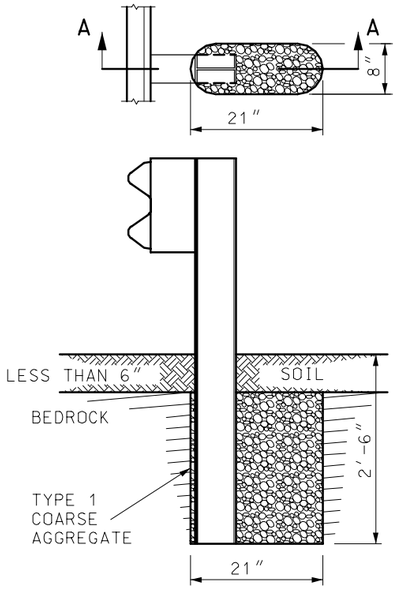


SECTION A-A
ROCK ENCOUNTERED
UP TO 6″ BENEATH SURFACE

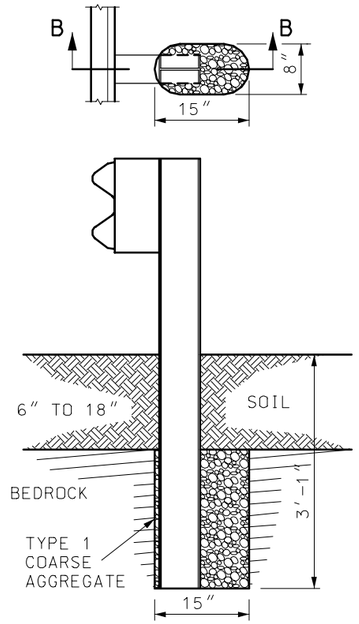


SECTION B-B
ROCK ENCOUNTERED
6″ TO 18″ BENEATH SURFACE

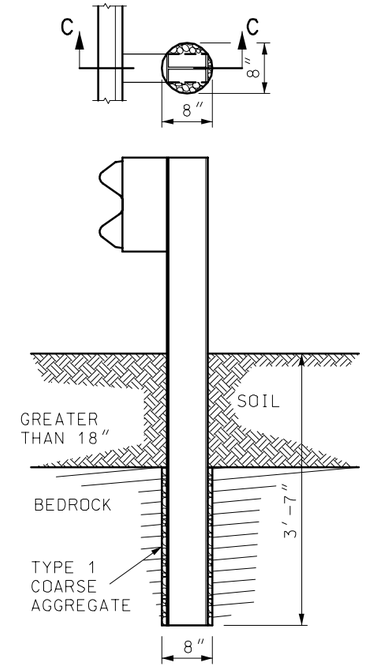


SECTION C-C
ROCK ENCOUNTERED MORE
THAN 18″ BENEATH SURFACE

## SETTING POST IN SOLID ROCK

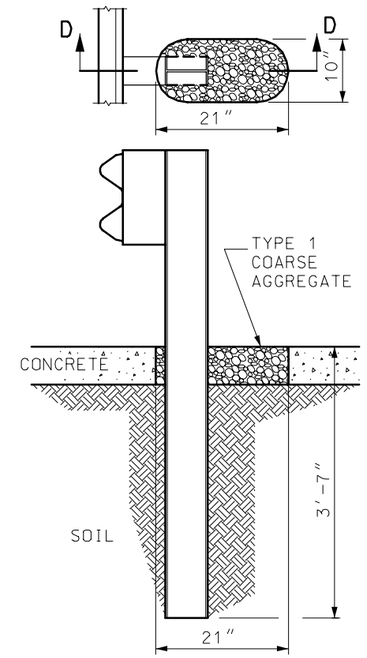


SECTION D-D

## SETTING POST THROUGH CONCRETE

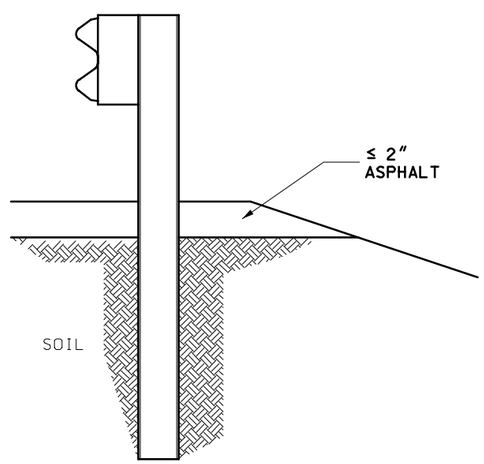


## SETTING POST THROUGH ASPHALT

GENERAL NOTES:

CONCRETE WHERE REQUIRED SHALL BE CLASS B OR OF A COMMERCIAL MIXTURE MEETING THE REQUIREMENTS OF THE STANDARD SPECIFICATIONS. NO DIRECT PAYMMENT WILL BE MADE FOR THIS CONCRETE OR ANY ADDITIONAL WORK INVOLVED.

HOLES IN SOLID ROCK SHALL PROVIDE A DIAMETER OF NOT LESS THAN 4 INCHES GREATER THAN THE MAXIMUM TRANSVERSE DIMENSION OF THE POST SECTION.

POST MAY BE SHORTER WHERE PLACED IN 2 FEET OF SOLID ROCK. STEEL POSTS MAY BE FLAME OR SAW CUT. REPAIR OF CUT SHALL BE IN ACCORDANCE WITH SECTION 712 OF THE STANDARD SPECIFICATIONS.

MISSOURI HIGHWAYS AND TRANSPORTATION COMMISSION

**GUARDRAIL**

SETTING POST IN SOLID ROCK AND THROUGH CONCRETE OR ASPHALT

| DATE:_____ | EFFECTIVE: 07-01-2004 | 606.00AQ | 3/16 |
|---|---|---|---|

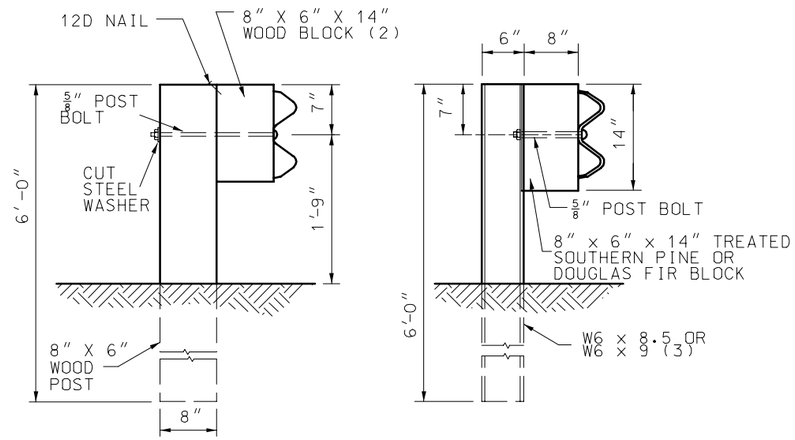


WOOD POST AND
WOOD OR PLASTIC BLOCK

STEEL POST AND
WOOD OR PLASTIC BLOCK

## TYPE A AND D GUARDRAIL

(1) END TREATMENT AS SPECIFIED ON PLANS.
(2) AN ALTERNATE DESIGN, AN 8" X 4" X 14" WOOD BLOCK, MAY BE USED
(3) THE CONTRACTOR MAY FURNISH EQUIVALENT SECTIONS FABRICATED FROM MATERIAL MEETING AND IN ACCORDANCE WITH SECTION 1040.

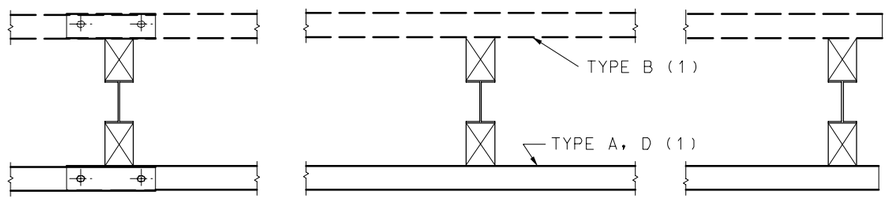


PLAN

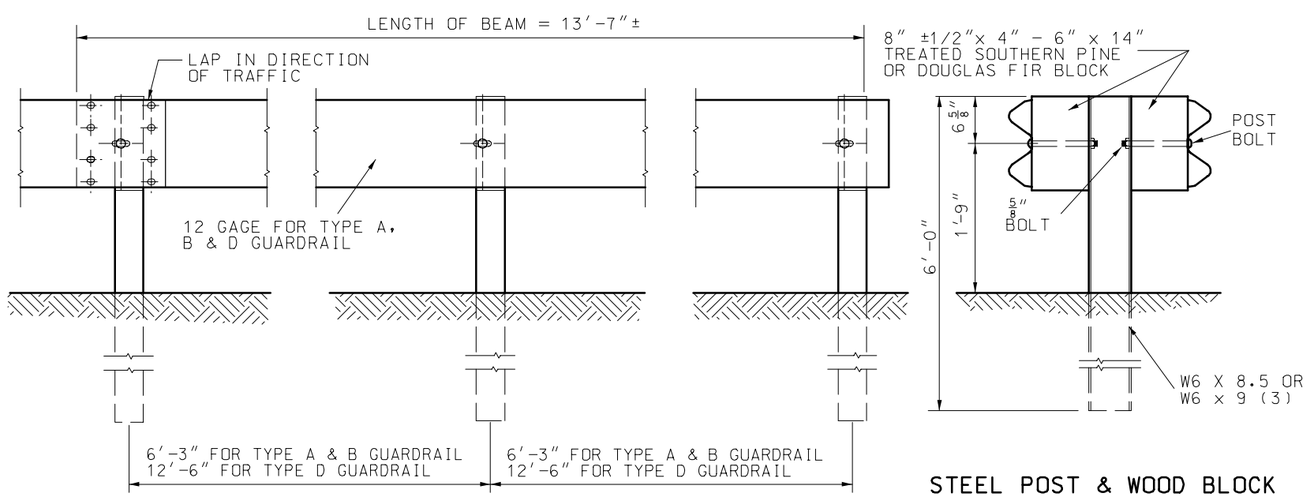


ELEVATION

STEEL POST & WOOD BLOCK

NOTE:
FOR TYPE E GUARDRAIL AND TRANSITION DETAILS SEE SHEET 7 OF 15.

## TYPE B GUARDRAIL

GENERAL NOTES:

WASHERS SHALL BE OMITTED ON ALL CONNECTIONS ON TYPE A, B AND D GUARDRAIL.

ALL DIMENSIONS ARE SUBJECT TO MANUFACTURING TOLERANCES EXCEPT WHERE ALLOWABLE TOLERANCES ARE SHOWN.

| MISSOURI HIGHWAYS AND TRANSPORTATION COMMISSION | | | |
|---|---|---|---|
| | GUARDRAIL<br>TYPES A, B & D | | |
| DATE:_____ | EFFECTIVE: 07-01-2004 | 606.00AQ | 4/16 |

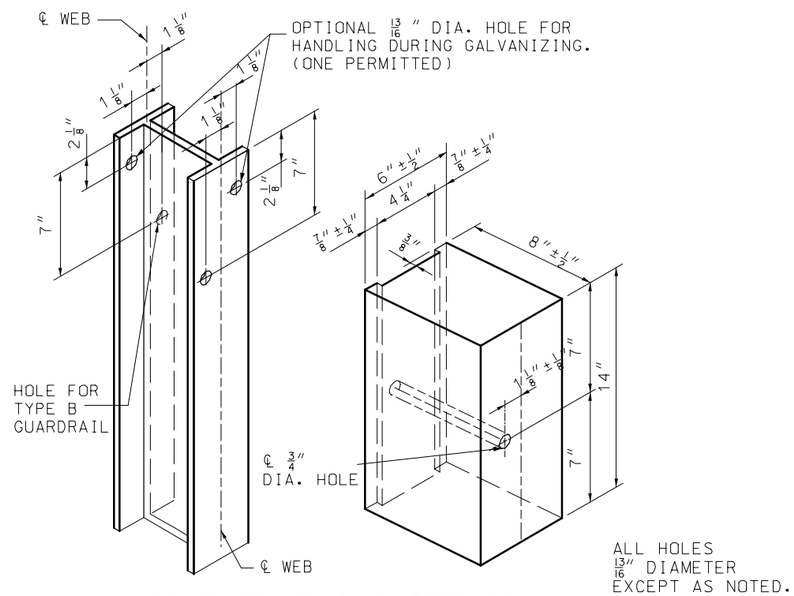


**HOLE PUNCHING DETAIL**
FOR STEEL POST & WOOD OR PLASTIC BLOCKS (1)

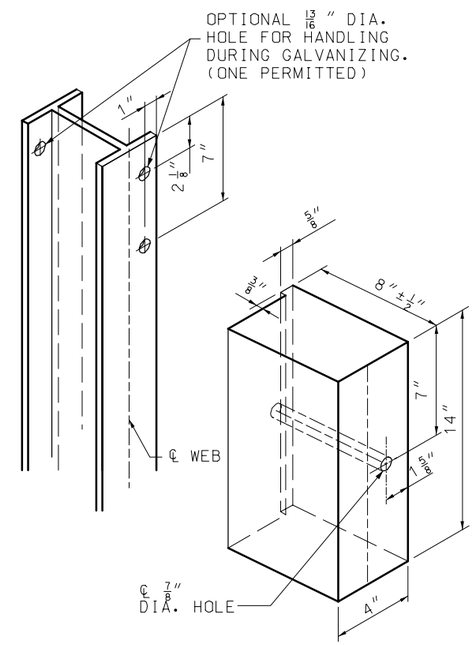


**ALTERNATE DESIGN FOR WOOD BLOCK**

(1) THE OVERALL NOMINAL DIMENSIONS SHOWN SHALL BE MET, ALTHOUGH THE SHAPE OF THE PLASTIC BLOCKS MAY VARY FROM THE SHAPE SHOWN, EXCEPT THE 7/8" ±1/4" FLANGE AND THE OVERALL WIDTH DIMENSIONS MAY BE WAIVED IF APPROVED BY PROJECT OPERATIONS.

| MISSOURI HIGHWAYS AND TRANSPORTATION COMMISSION | | | |
|---|---|---|---|
| | GUARDRAIL | | |
| DATE:_____ | EFFECTIVE: 07-01-2004 | 606.00AQ | 5/16 |

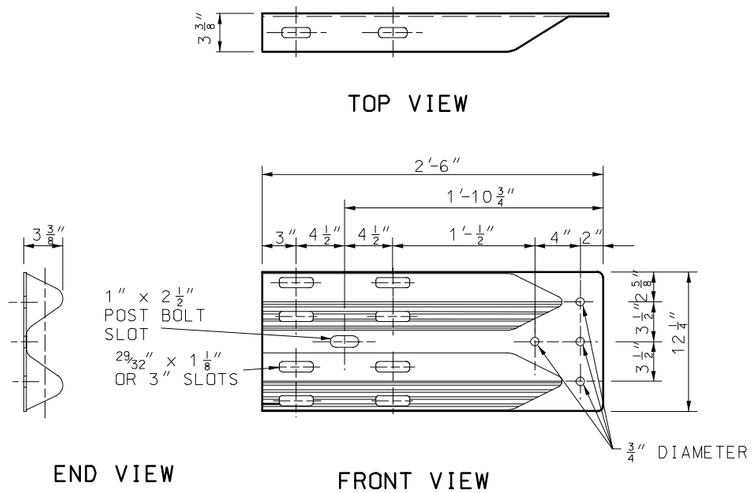


## TERMINAL CONNECTOR

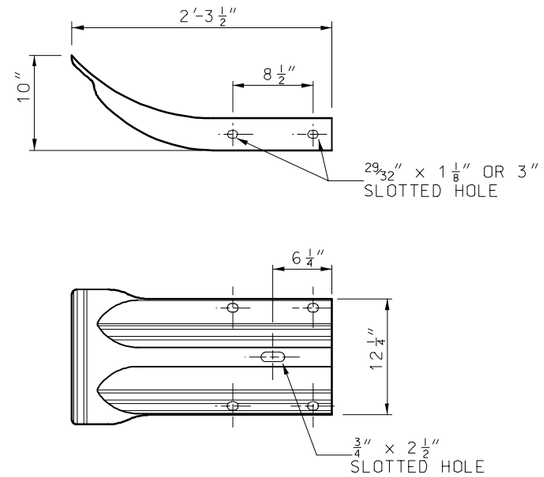


## END SECTION
12 GAGE

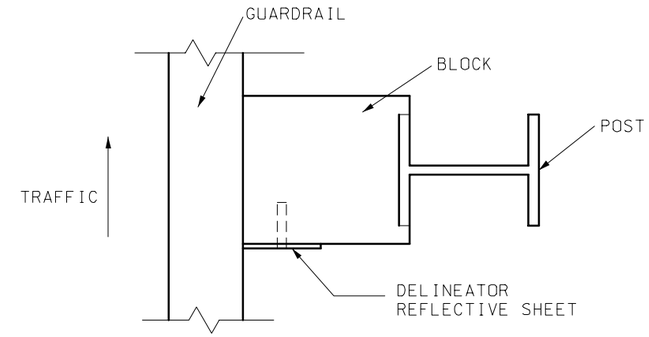


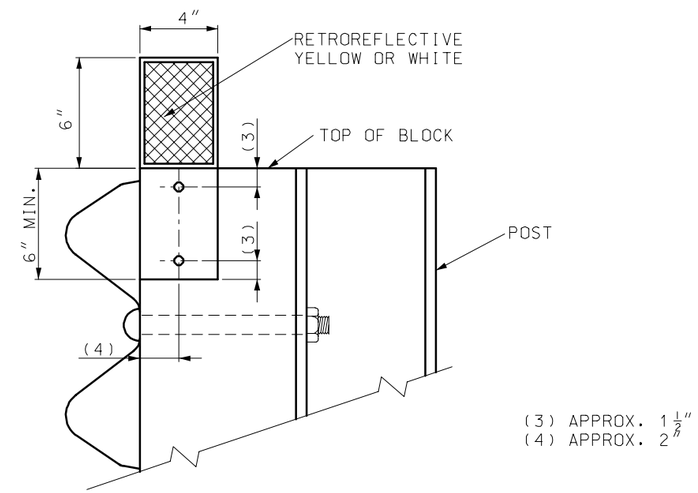


DELINEATORS SHALL BE AFFIXED WITH 2" (MIN.) LONG X 1/4" DIAMETER BOLTS OR SCREWS. THE DIAMETER OF THE BOLT'S OR SCREW'S HEAD SHALL BE TWICE THE DIAMETER OF THE HOLE, WITH A MINIMUM OF 1/2". WASHERS SHALL BE USED WITH THE BOLTS AND SHALL HAVE 1/2" DIAMETER HOLES.

## DELINEATORS ON NEW GUARDRAIL

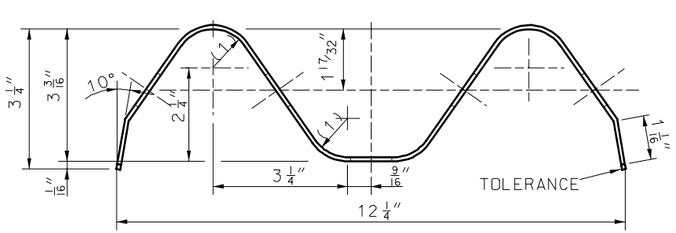


## SECTION THRU BEAM

(1) 15/16" RADIUS
(2) 2" (TOLERANCE +1 1/4", -1/4 ")

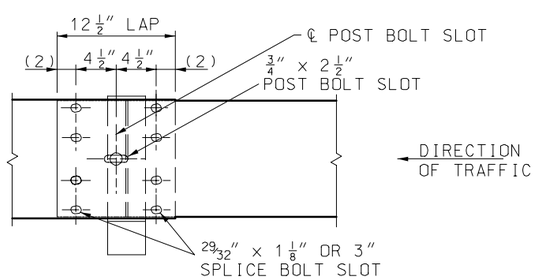


## BEAM SPLICE AT POST
## TYPE A, B AND D GUARDRAIL

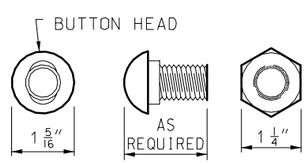


OVAL SHOULDER SHALL BE OF ADEQUATE HEIGHT, LENGTH & SHAPE TO PREVENT TURNING DURING INSTALLATION OR REMOVAL OF BOLT.

## 5/8" POST OR SPLICE BOLT

NOTE: PORTIONS OF BEAM WITH UNUSED BOLT SLOTS TO BE LAPPED BEHIND.

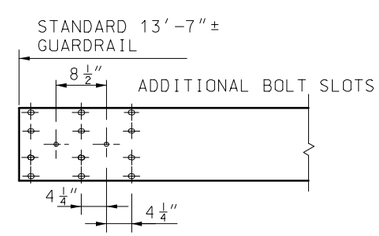


BEAM DETAILS SHOWING LOCATION OF ADDITIONAL BOLT SLOTS NECESSARY TO OBTAIN GUARDRAIL OFFSET.

| MISSOURI HIGHWAYS AND TRANSPORTATION COMMISSION | | | |
|---|---|---|---|
| | GUARDRAIL | | |
| DATE:_____ | EFFECTIVE:07-01-2004 | 606.00AQ | 6/16 |

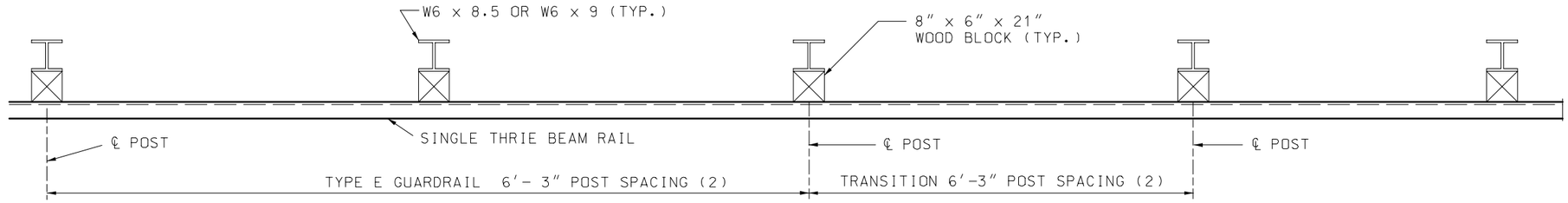


## PLAN

(1) THE CONTRACTOR MAY FURNISH EQUIVALENT SECTIONS FABRICATED FROM MATERIAL MEETING AND IN ACCORDANCE WITH SECTION 1040.

(2) IF THE TRANSITION IS CONNECTED TO A BRIDGE ANCHOR SECTION, POST SPACING FOR TYPE E GUARDRAIL AND THE TRANSITION SECTION SHALL BE 3′-1¼″ . FOR ALL OTHER CASES, POST SPACING SHALL BE 6′-3″.

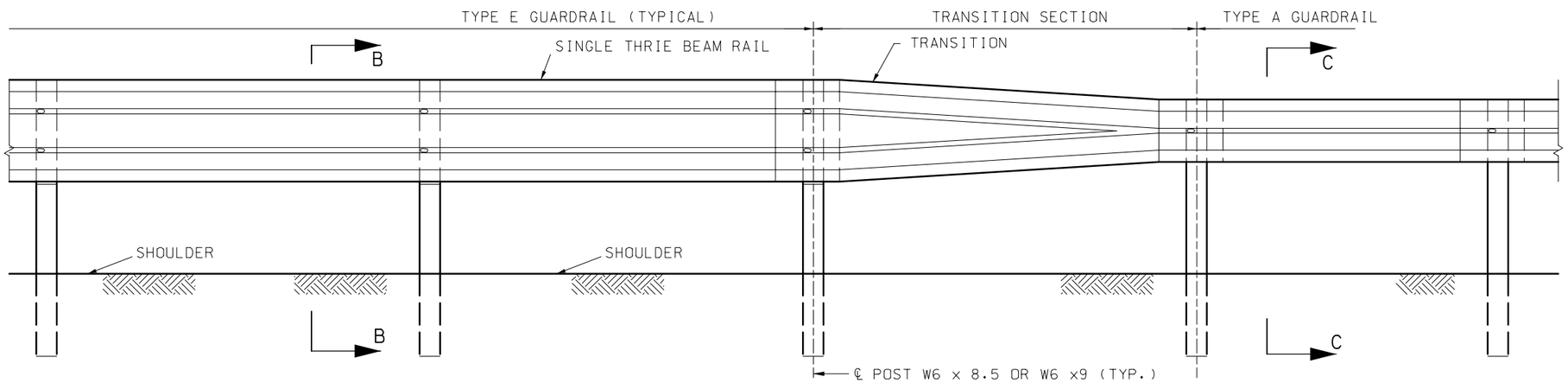


## PART SECTION SHOWING TYPE E TO TYPE A GUARDRAIL TRANSITION

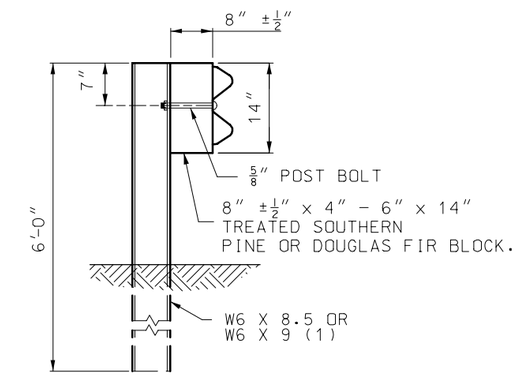


SECTION C-C
FOR WOOD BLOCKS

THE OVERALL NOMINAL DIMENSIONS SHOWN SHALL BE MET, ALTHOUGH THE SHAPE OF THE PLASTIC BLOCKS MAY VARY FROM THE SHAPE SHOWN, EXCEPT THE 7/8″ ±¼″ FLANGE AND THE OVERALL WIDTH DIMENSIONS MAY BE WAIVED IF APPROVED BY PROJECT OPERATIONS.

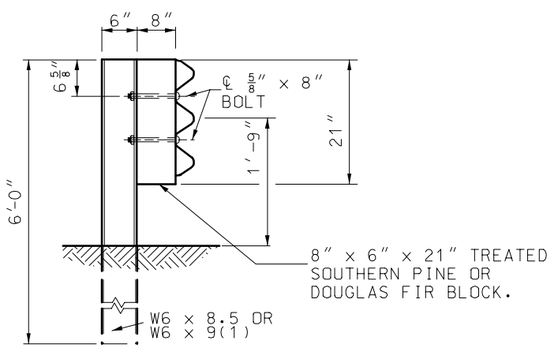


SECTION B-B
FOR WOOD BLOCKS

NOTE: BLOCKS SHALL BE THE SAME TYPE THROUGHOUT THE PROJECT LIMITS.

ALL HOLES 13/16″ DIAMETER EXCEPT AS NOTED

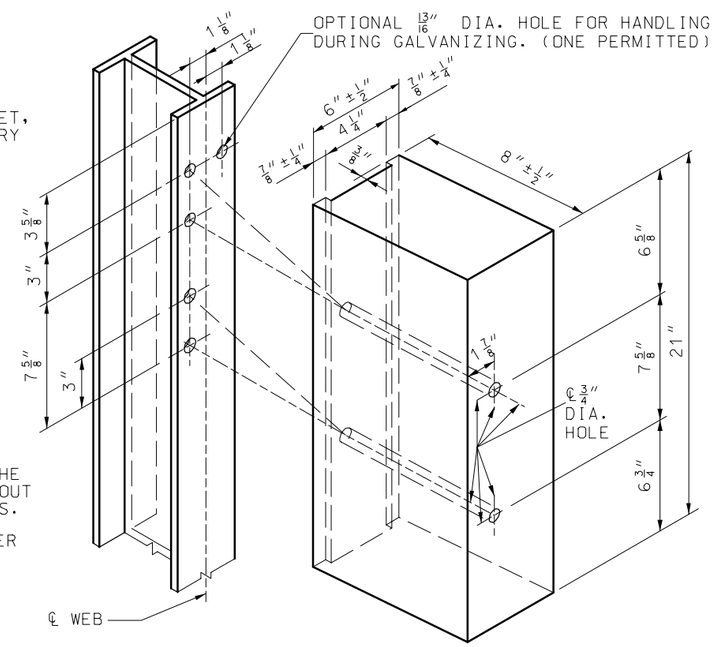


## HOLE PUNCHING DETAIL
FOR STEEL POST & WOOD OR PLASTIC BLOCKS

GENERAL NOTES:

TYPE E GUARDRAIL SHALL USE 6′-3″ POST SPACING UNLESS 3′-1½″ POST IS SPECIFIED.

THE THRIE BEAM RAIL FOR THE TYPE E GUARDRAIL AND THE TRANSITION SECTION SHALL BE MADE OF STEEL AND SHALL BE 12 GUAGE.

FOR PROTECTIVE COATING AND MATERAL REQUIREMENTS, SEE SECTION 1040 OF THE STANDARD SPECIFICATIONS.

SEE SHEET 3 OF 13 FOR REQUIREMENTS FOR SETTING POSTS AT OBSTRUCTIONS.

ALL DIMENSIONS ARE SUBJECT TO MANUFACTURING TOLERANCES EXCEPT WHERE ALLOWABLE TOLERANCES ARE SHOWN.

FOR DETAILS NOT SHOWN, SEE OTHER SHEETS OF THIS DRAWING.

| MISSOURI HIGHWAYS AND TRANSPORTATION COMMISSION | | | |
|---|---|---|---|
| | **GUARDRAIL** TYPE E | | |
| DATE:_____ | EFFECTIVE: 07-01-2004 | **606.00AQ** | 7/16 |

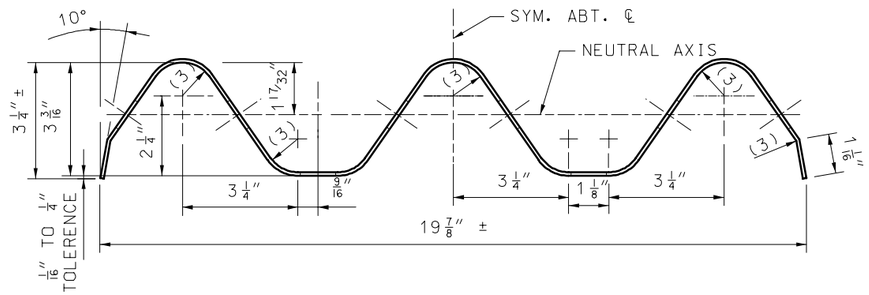


## SECTION THRU THRIE BEAM RAIL

(1) 2" (TOLERANCE +1 1/4", −1/4")
(2) SHOULDER WIDENING SHALL CONSIST OF EMBANKMENT MATERIAL COMPACTED IN ACCORDANCE WITH SETION 203.4 OF STANDARD SPECIFICATION.
(3) 15/16" RADIUS

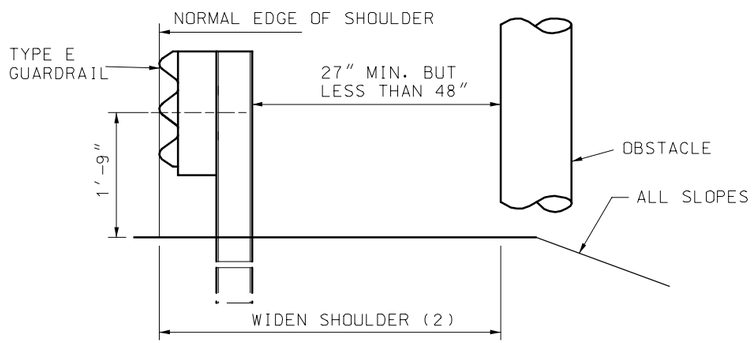


## LATERAL PLACEMENT OF TYPE E GUARDRAIL

SHOULDER ENCOACHMENT WILL BE PERMITTED TO OBTAIN MINIMUM CLEARANCE AT EXISTING OBSTACLES. A 50:1 TAPER SHALL BE USED FROM THE NORMAL SHOULDER LINE LOCATION TO THE ENCROACHMENT LOCATION AND, IF GUARDRAIL IS CONTINOUS, BACK TO THE LOCATION.

USE 25 FEET OF TYPE E GUARDRAIL PRECEDING THE OBSTACLE, AND THROUGH THE LIMITS OF THE OBSTACLE WHEN THE ABOVE CONDITION EXISTS.

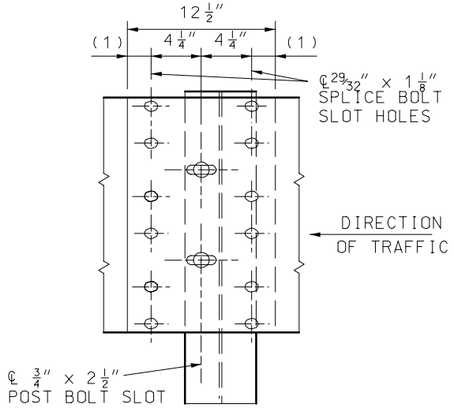


## THRIE BEAM RAIL SPLICE AT POST

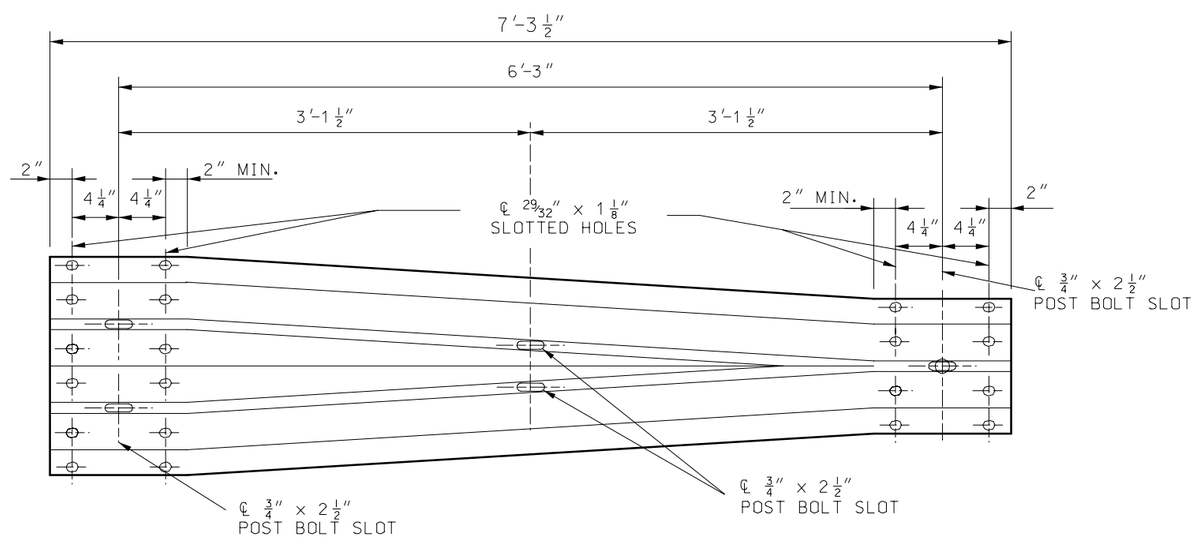


## ELEVATION OF TRANSITION SECTION

| MISSOURI HIGHWAYS AND TRANSPORTATION COMMISSION | | | |
|---|---|---|---|
| | **GUARDRAIL** TYPE E | | |
| DATE:_____ | EFFECTIVE: 07-01-2004 | **606.00AQ** | 8/16 |

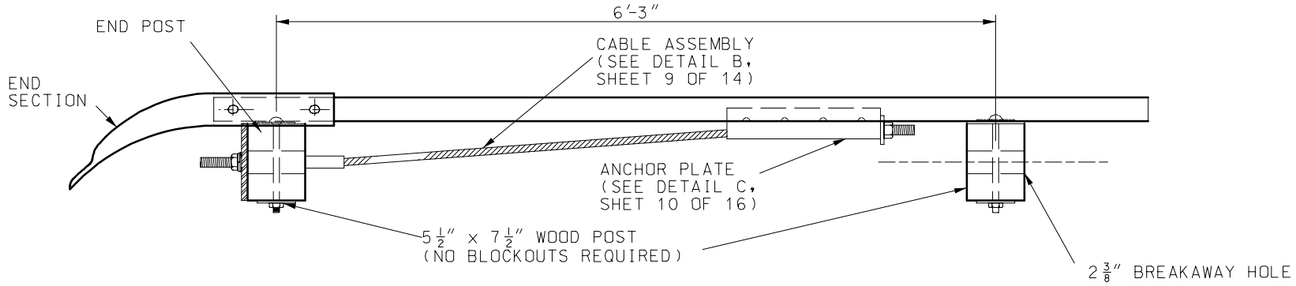


NOTE: SEE SHEET 6 OF 14 FOR DETAILS OF END SECTION.

PLAN

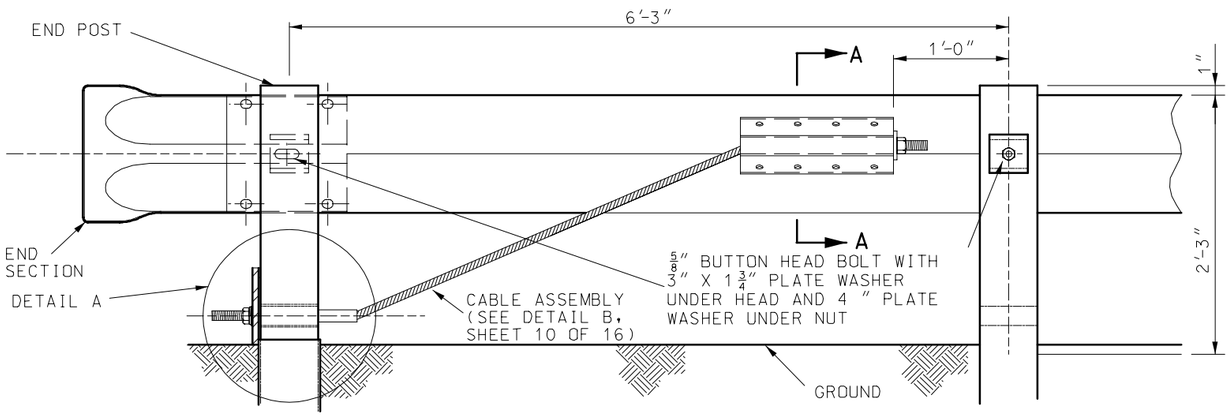


POST 1 ELEVATION (BACK SIDE) POST 2

## END ANCHOR DETAILS

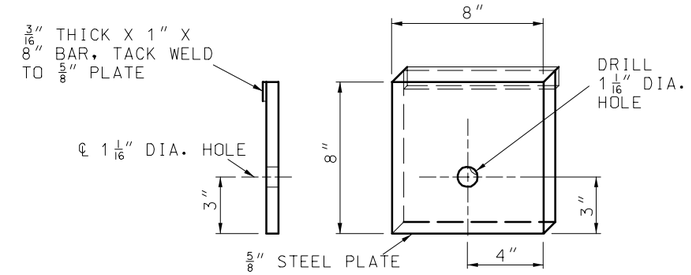


## DETAIL OF STEEL BEARING PLATE

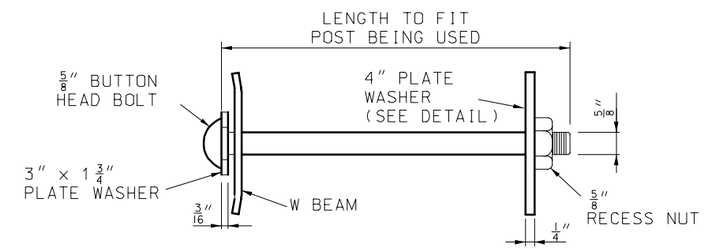


## POST BOLT ASSEMBLY

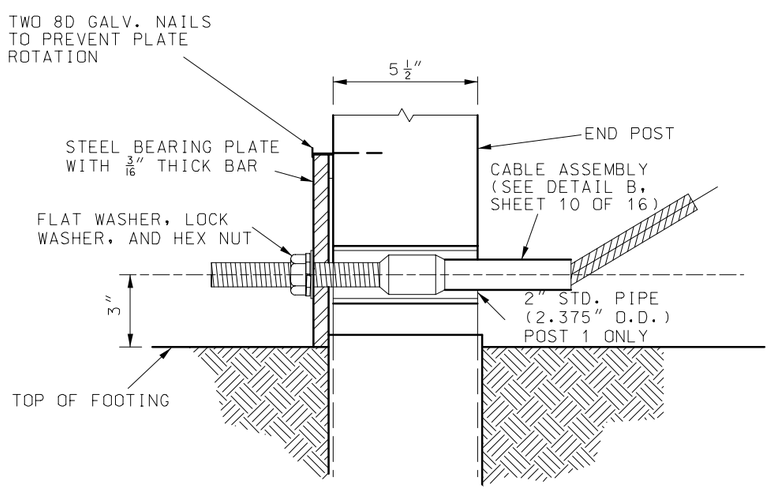


DETAIL A (END POST DETAIL)

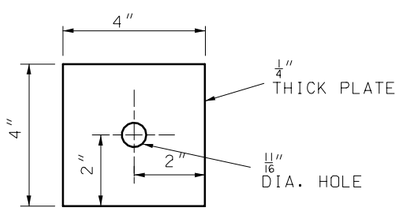


4" PLATE WASHER

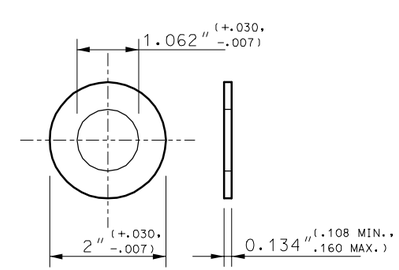


TYPE A WASHER

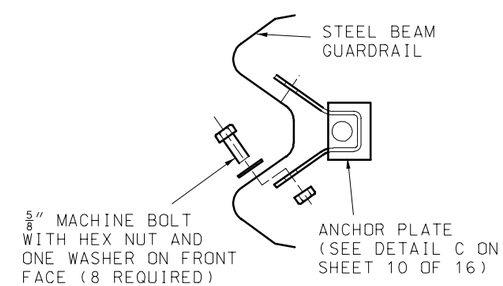


SECTION A-A

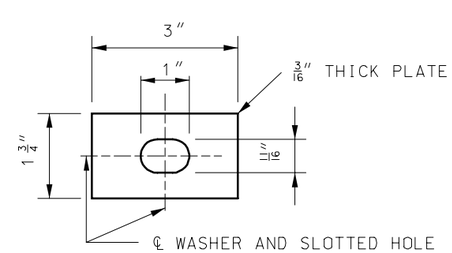


3" x 1 3/4" PLATE WASHER

GENERAL NOTES:

END ANCHOR DETAILS SHOWN SHALL BE USED ONLY ON DOWN STREAM ENDS OF GUARDRAIL WHEN AN END ANCHOR IS REQUIRED.

THE DETAILS SHOWN ARE FOR AN END ANCHORAGE SYSTEM FOR GUARDRAIL. GUARDRAIL AND POSTS ARE PAID FOR SEPARATELY.

CABLE ASSEMBLY AND ANCHOR PLATE SHALL BE SUBJECT TO APPROVAL BY THE ENGINEER AND SHALL HAVE A MINIMUM BREAKING STRENGTH OF 20 TONS.

ALL FITTINGS AND HARDWARE REQUIRED SHALL BE GALVANIZED AFTER FABRICATION, SEE SECTION 1040 STANDARD SPECIFICATION.

WOOD POSTS 1 AND 2 SHALL BE 5 1/2" X 7 1/2".

SEE SECTION 1050 STANDARD SPECIFICATIONS FOR WOOD POST.

MISSOURI HIGHWAYS AND TRANSPORTATION COMMISSION

**GUARDRAIL**
END ANCHOR DETAILS

DATE:_____ EFFECTIVE: 07-01-2004 **606.00AQ** 9/16

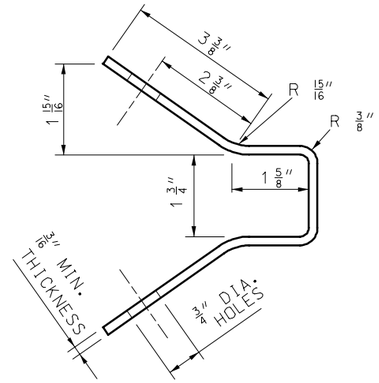


## FABRICATION DETAIL

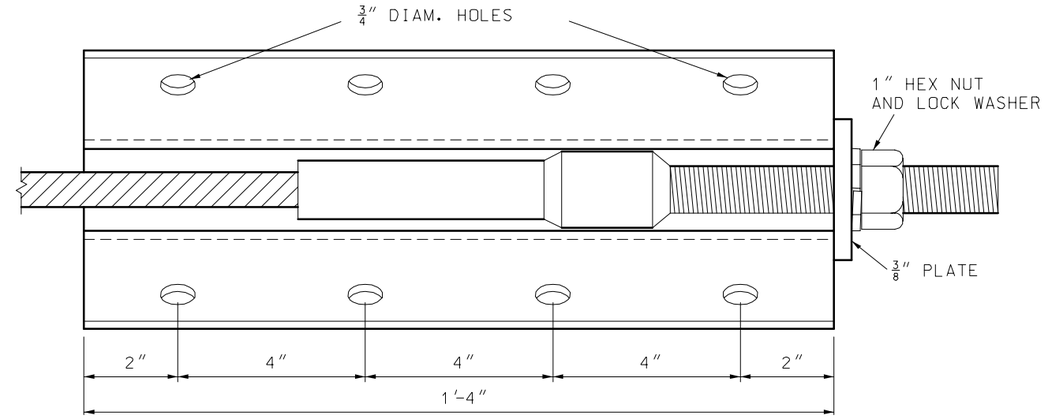


## DETAIL C
## ASSEMBLED VIEW
(ANCHOR PLATE)

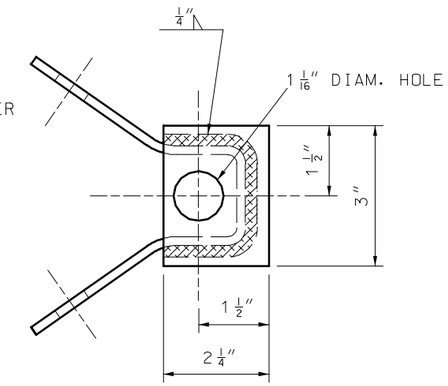


END VIEW

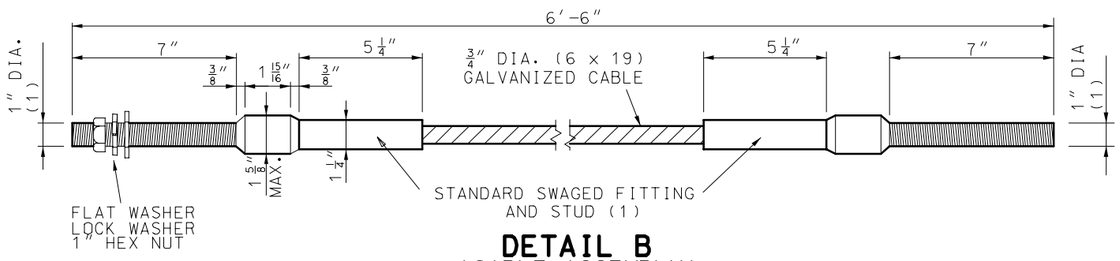


## DETAIL B
(CABLE ASSEMBLY)

(1) STUD, THREADED ENTIRE LENGTH.
(2) 6'-3" SPACING FOR TYPE A OR B GUARDRAIL; 3'-1 1/2" SPACING FOR TYPE E GUARDRAIL.
(3) 2' MINIMUM BUT LESS THAN 4' FOR TYPE E GUARDRAIL; 4' MINIMUM FOR TYPE A GUARDRAIL.

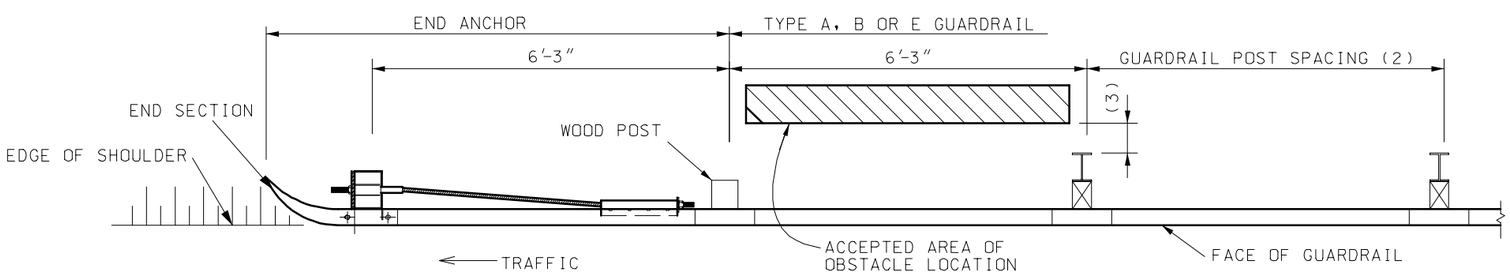


PLAN

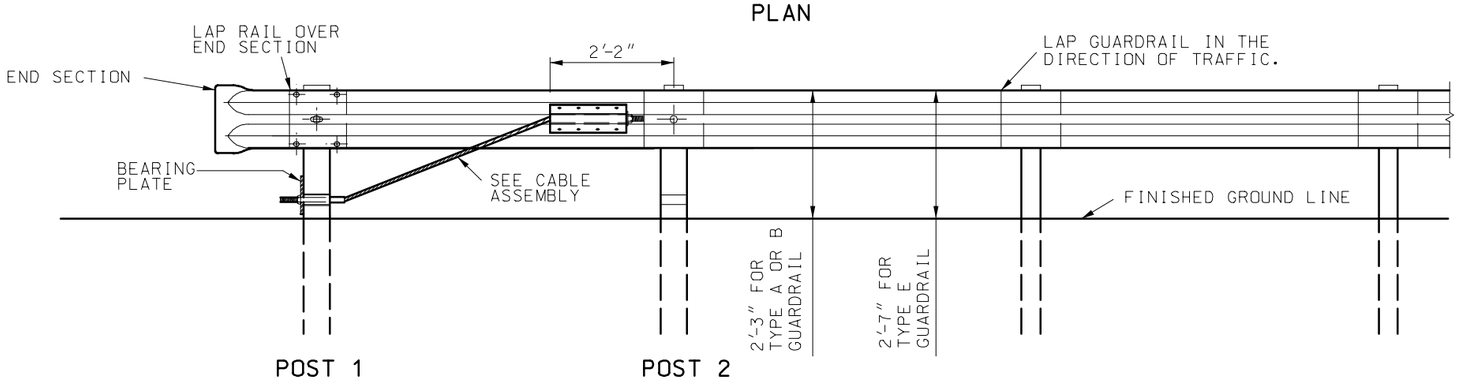


ELEVATION
## END ANCHOR

| MISSOURI HIGHWAYS AND TRANSPORTATION COMMISSION | | | |
|---|---|---|---|
| | **GUARDRAIL**<br>END ANCHOR DETAILS | | |
| DATE:_____ | EFFECTIVE:07-01-2004 | **606.00AQ** | 10/16 |

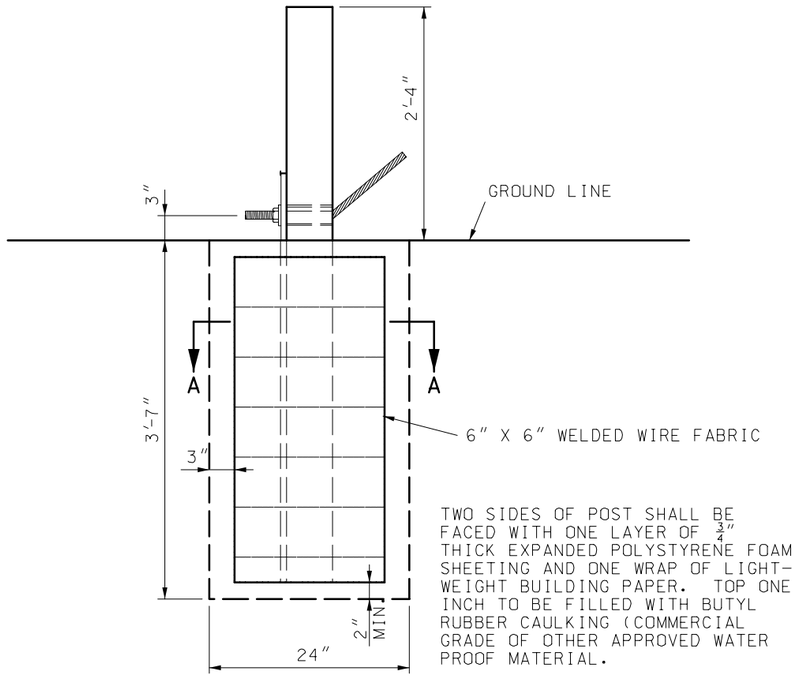


POST 1

## CONCRETE FOUNDATION FOR END ANCHORS

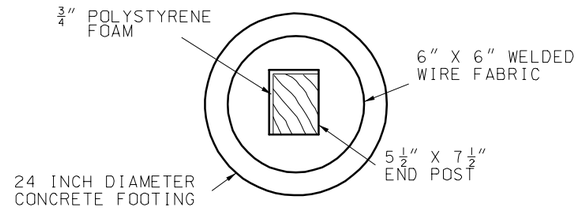


SECTION A-A
EXPANDED POLYSTYRENE FOAM INSTALLATION DETAIL

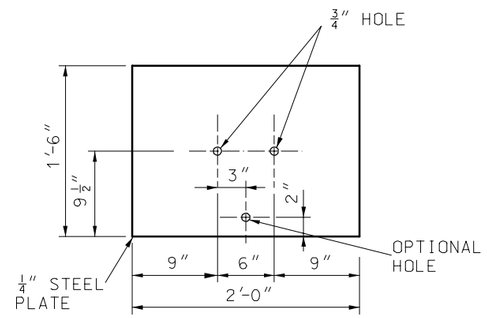


SOIL PLATE

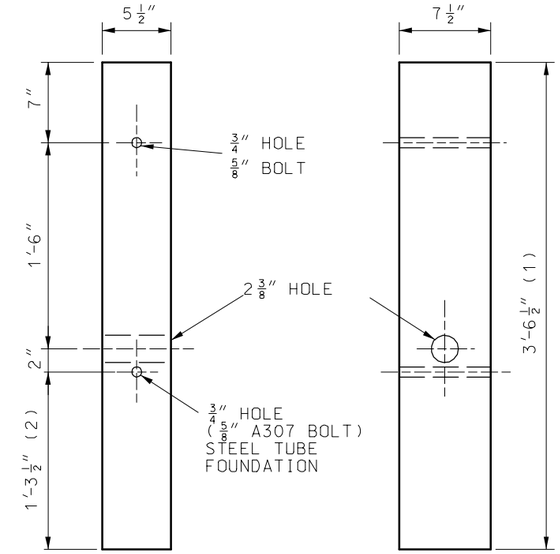


FRONT VIEW SIDE VIEW

## WOOD BREAKAWAY POST

SEE SECTION 1050

(1) 5'-9 1/2" FOR CONCRETE FOUNDATION ALTERNATE.

(2) 3'-6 1/2" FOR CONCRETE FOUNDATION ALTERNATE.

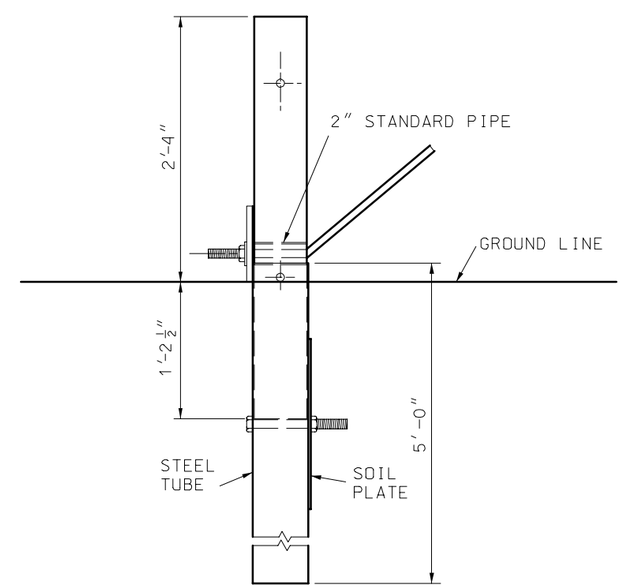


POST 1

## STEEL TUBE FOUNDATION FOR END ANCHORS

BOLTS AND NUTS SHALL BE GALVANIZED IN ACCORDANCE WITH THE REQUIREMENTS OF AASHTO M232, OR THEY MAY BE MECHANICALLY GALVANIZED IN ACCORDANCE WITH AASHTO M232 CLASS C.

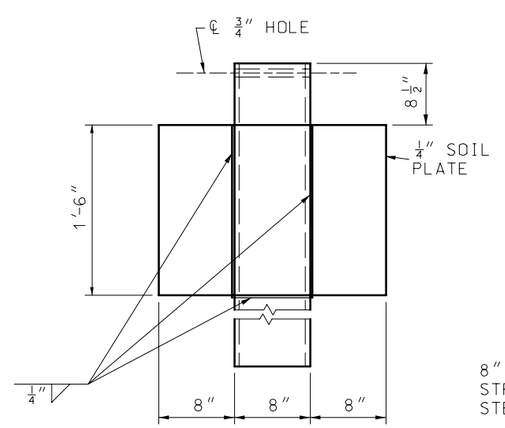


SHOP WELDED
SOIL PLATE CONNECTION

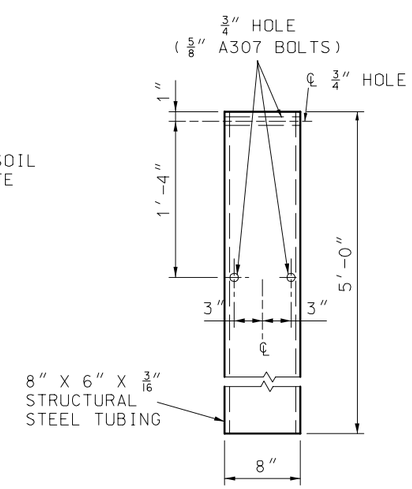


STEEL TUBE

GENERAL NOTES:

THE CONTRACTOR HAS THE OPTION TO INSTALL WOOD POST 1 AND 2 IN STEEL TUBE OR CONCRETE FOUNDATION.

TRIMMING OF WOOD POST MAY BE NECESSARY FOR STEEL TUBE FOUNDATION.

STEEL TUBE FOUNDATIONS SHALL BE DRILLED AND BACK-FILLED WITH A SUITABLE MATERIAL WHEN THE SOIL PLATE IS BOLTED, AS SHOWN, TO THE STEEL TUBE. STEEL TUBE FOUNDATION MAY BE DRIVEN WHEN THE SOIL PLATE IS WELDED, AS SHOWN, TO THE STEEL TUBE.

| MISSOURI HIGHWAYS AND TRANSPORTATION COMMISSION | | | |
|---|---|---|---|
| | GUARDRAIL | | |
| DATE:_____ | EFFECTIVE: 07-01-2004 | 606.00AQ | 11/16 |

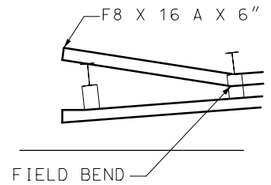


DETAIL A

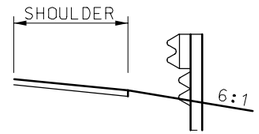


SECTION A-A

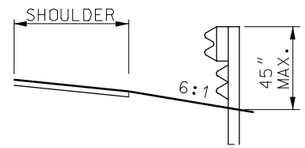


SECTION B-B
(WITH RUBRAIL)

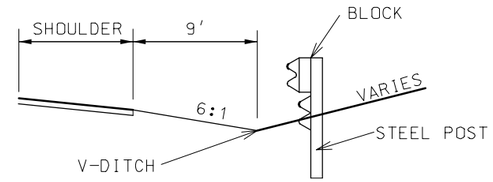


SECTION C-C
(WITH RUBRAIL)

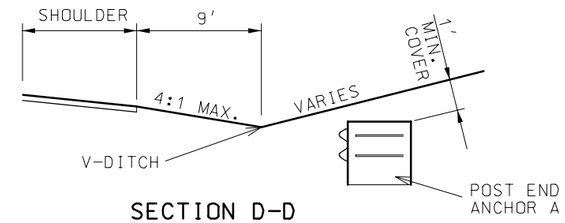


SECTION D-D

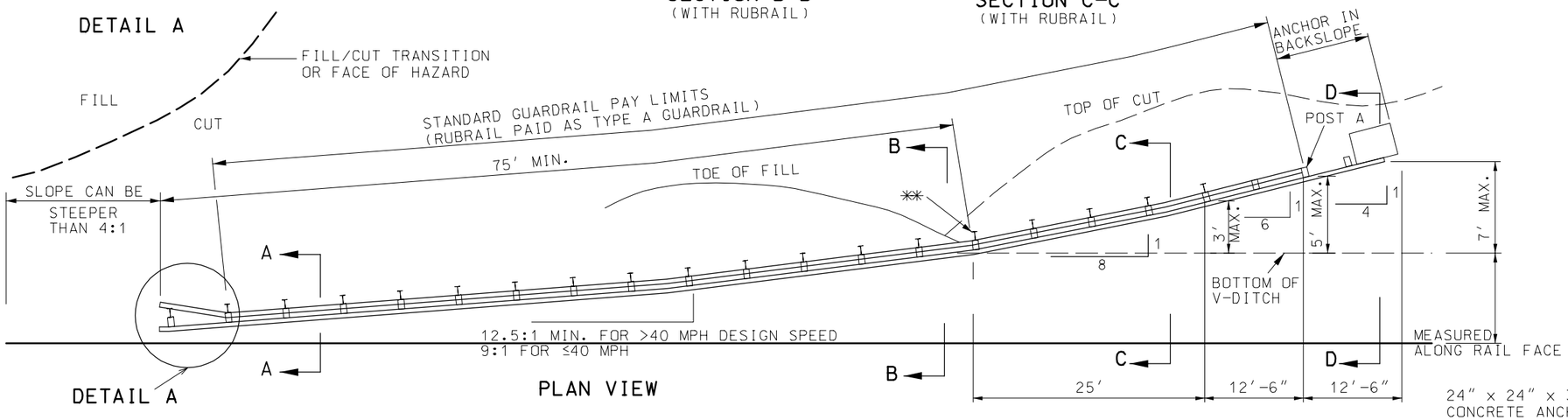


DETAIL A

PLAN VIEW

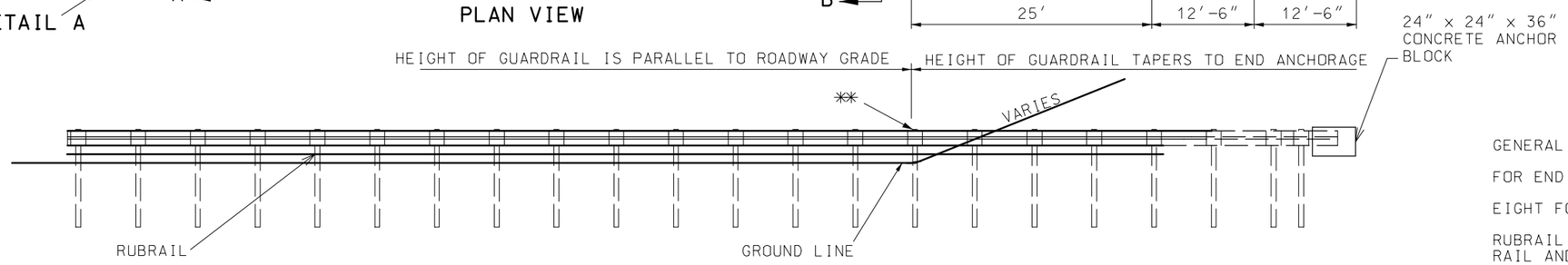


** THE POST BEHIND THE DITCHLINE MAY BE SHORTENED TO PROVIDE 48" MIIN. EMBEDMENT.

ELEVATION

## ANCHORED IN BACKSLOPE GUARDRAIL

COST OF SHAPING ROCK FACE FOR PLACING OF TERMINAL CONNECTOR, DRILLING HOLES, FURNISHING AND PLACING BOLTS, WASHERS, CAULKING, ANCHORS AND END SHOE TO BE INCLUDED IN THE PRICE OF GUARDRAIL ANCHOR, ROCK FACE.

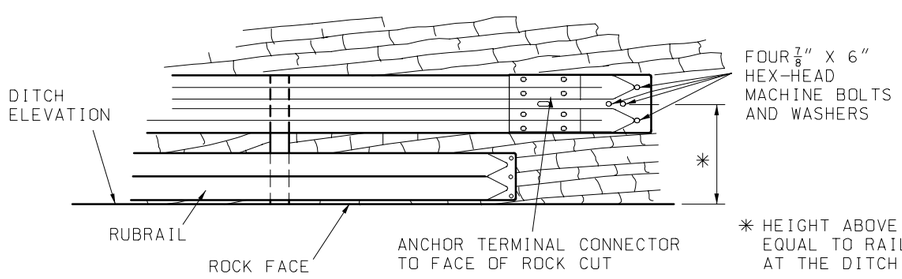


* HEIGHT ABOVE DITCH IS EQUAL TO RAIL ELEVATION AT THE DITCH CROSSING.

## ROCK FACE GUARDRAIL ANCHOR

GENERAL NOTES:

FOR END ANCHOR DETAILS, SEE SHEET 8 OF 14.

EIGHT FOOT POST IS REQUIRED WITH RUBRAIL.

RUBRAIL BEGINS WHEN THE DISTANCE BETWEEN THE GUARDRAIL AND THE GROUND IS 18" AND INCREASING.

END ANCHOR POSTS 1 AND 2 SHALL HAVE FOUNDATION TYPE AS SHOWN ON SHEET 8 OF 14.

THE CONTRACT UNIT PRICE FOR EMBEDDED GUARDRAIL ANCHOR SHALL INCLUDE THE CONCRETE ANCHOR. EXCAVATION AND BACKFILLING, OR TERMINAL CONNECTOR, AND ALL INCIDENTIAL HARDWARE AND WORK NECESSARY TO COMPLETE THE INSTALLATION.

THE GUARDRAIL SHALL EXTEND 50' ± BEYOND THE DITCH LINE AND TERMINATE A MINIMUM OF 12 INCHES BELOW GROUND ELEVATION OF THE BACKSLOPE.

BLOCKOUTS WILL NOT BE REQUIRED FOR ANY POST WHICH WILL BE COMPLETELY BELOW GROUND. THE ALIGNMENT OF SUCH POSTS SHALL BE APPROVED BY THE ENGINEER.

SEE OTHER DRAWINGS AND STANDARD SPECIFICATIONS FOR MATERIAL AND CONSTRUCTION REQUIREMENTS NOT SHOWN.

MISSOURI HIGHWAYS AND TRANSPORTATION COMMISSION

**GUARDRAIL**

ANCHOR IN BACKSLOPE
WITH V-DITCH
STEEPER THAN 10:1,
4:1 MAX. FORESLOPE

| DATE:_____ | EFFECTIVE: 07-01-2004 | 606.00AQ | 12/16 |
|---|---|---|---|

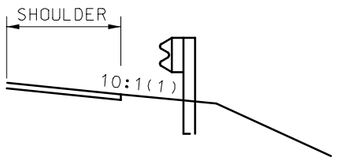


SECTION A-A

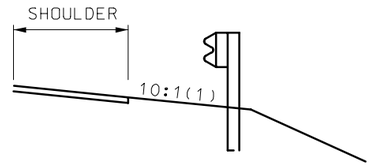


SECTION B-B

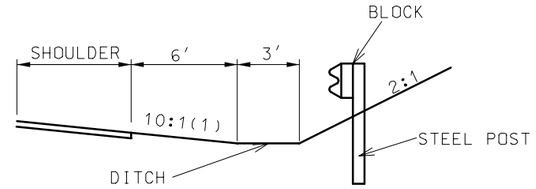


SECTION C-C

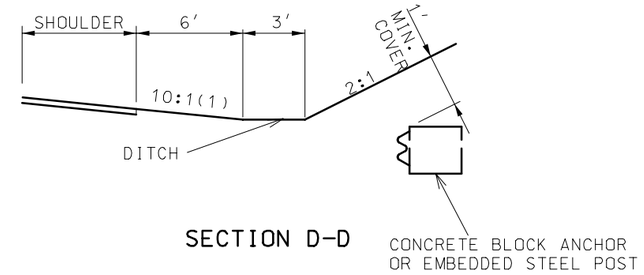


SECTION D-D

(1) MAX. CROSS SLOPE SHALL NOT EXCEED 6:1. RUBRAIL IS REQUIREDWHEN CROSS SLOPE EXCEEDS 10:1 OR WHEN THE DISTANCE BETWEENTHE GUARDRAIL AND THE GROUND IS 18" AND INCREASING.

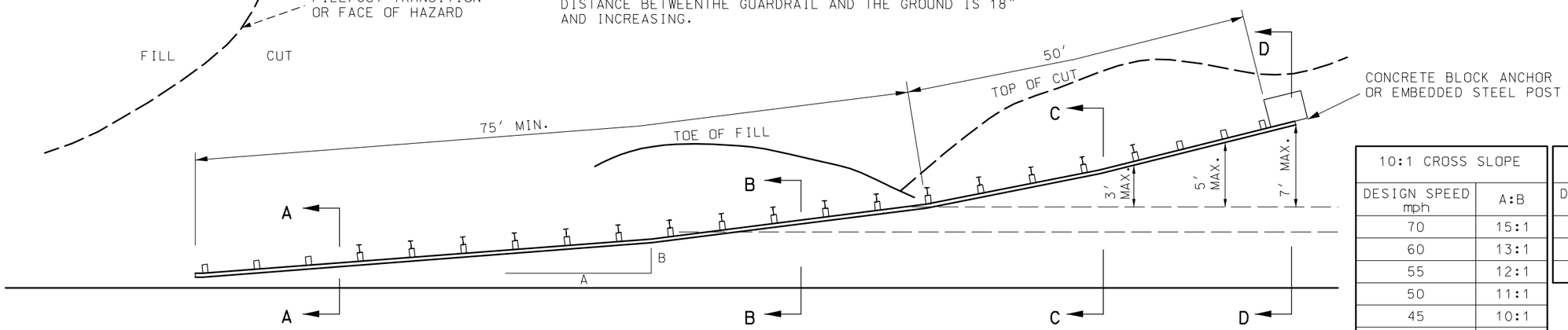


PLAN VIEW

| 10:1 CROSS SLOPE | |
|---|---|
| DESIGN SPEED mph | A:B |
| 70 | 15:1 |
| 60 | 13:1 |
| 55 | 12:1 |
| 50 | 11:1 |
| 45 | 10:1 |
| 40 | 9:1 |
| 30 OR LESS | 7:1 |

| STEEPER THAN 10:1 CROSS SLOPE (1) | |
|---|---|
| DESIGN SPEED mph | A:B |
| 45-70 | 12.5:1 |
| 40 | 9:1 |
| 30 OR LESS | 7:1 |

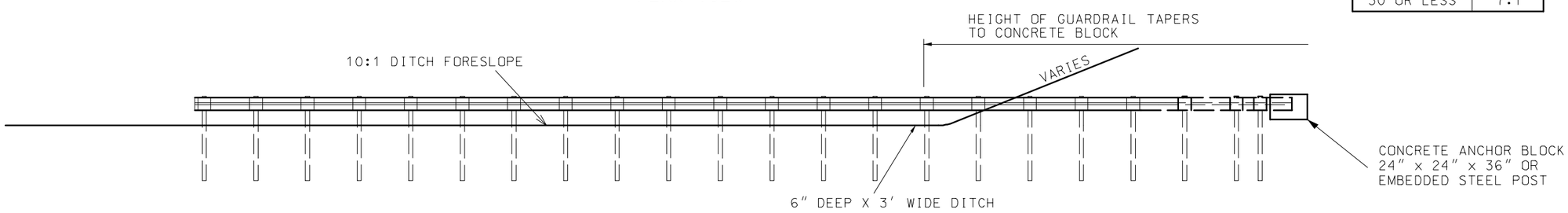


ELEVATION

## ANCHORED IN BACKSLOPE GUARDRAIL

MISSOURI HIGHWAYS AND TRANSPORTATION COMMISSION

**GUARDRAIL**
ANCHOR IN BACKSLOPE
WITH FLAT DITCH

DATE:_____ | EFFECTIVE: 07-01-2004 | **606.00AQ** | 13/16

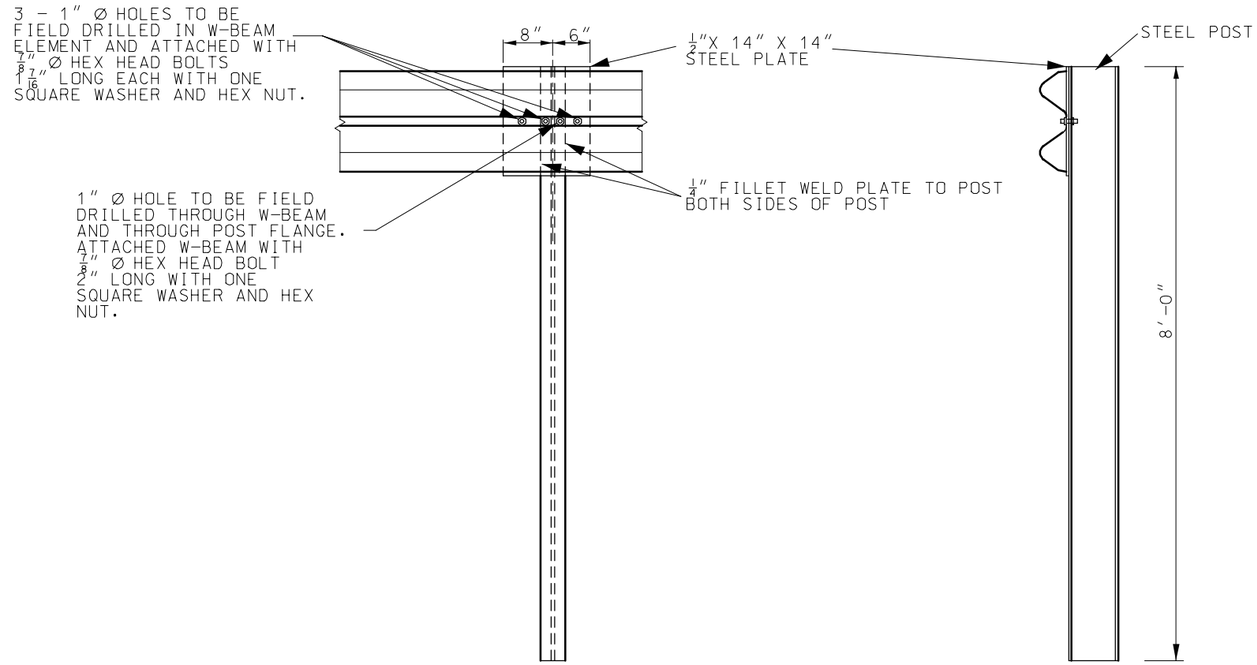


## EMBEDDED STEEL POST

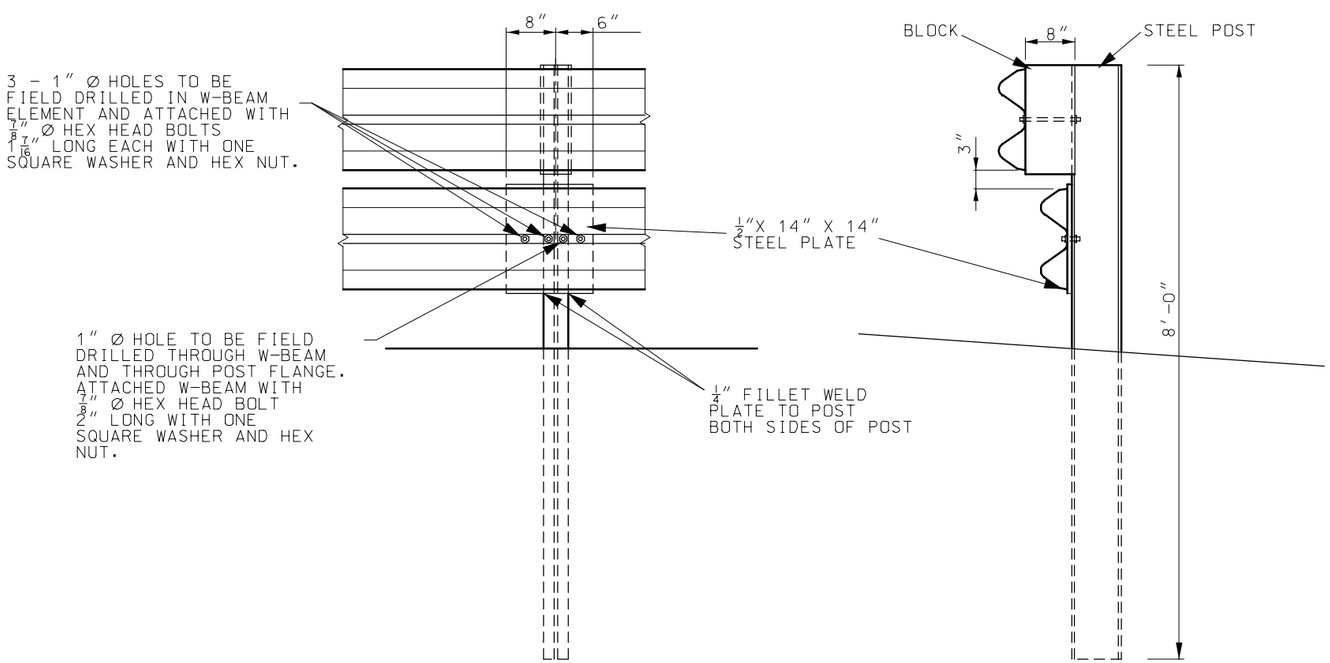


## SPECIAL RUBRAIL TO POST CONNECTION AT POST A

MISSOURI HIGHWAYS AND TRANSPORTATION COMMISSION

**GUARDRAIL**
ANCHORED IN BACKSLOPE
END ANCHORAGE DETAILS
EMBEDDED STEEL POST OPTION

DATE:_____ | EFFECTIVE: 07-01-2004 | **606.00AQ** | 14/16

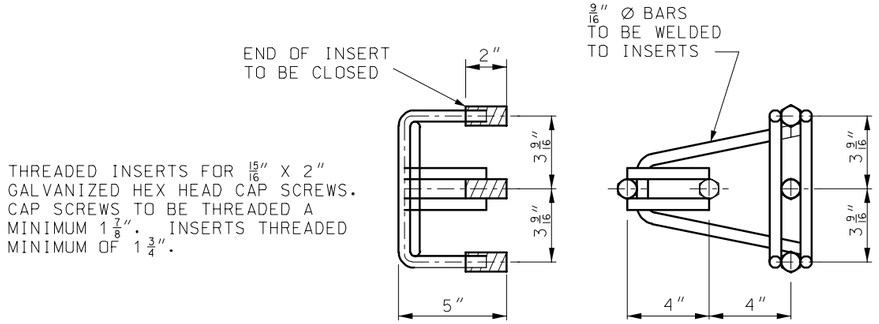


THREADED INSERTS FOR 15/16″ X 2″ GALVANIZED HEX HEAD CAP SCREWS. CAP SCREWS TO BE THREADED A MINIMUM 1 7/8″. INSERTS THREADED MINIMUM OF 1 3/4″.

## CONCRETE BLOCK ANCHOR
ANCHOR ASSEMBLY

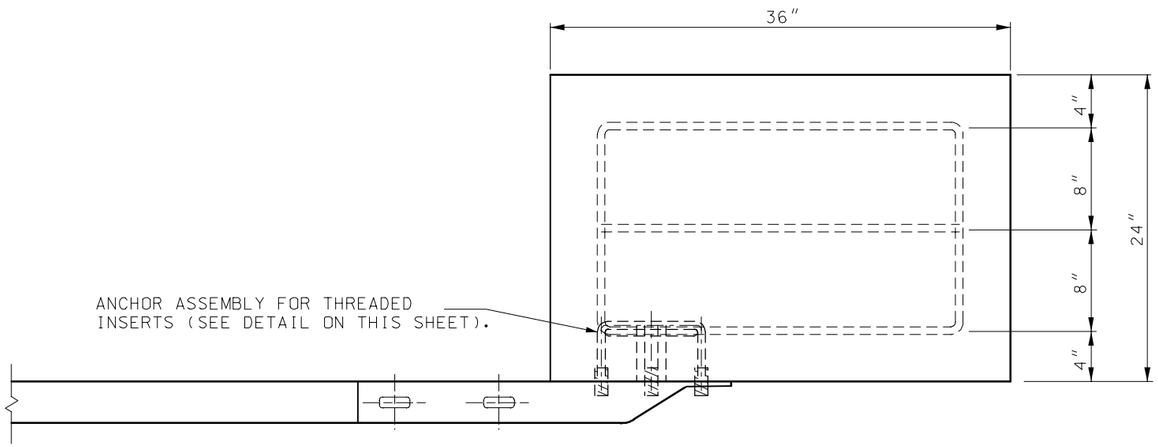


TOP VIEW

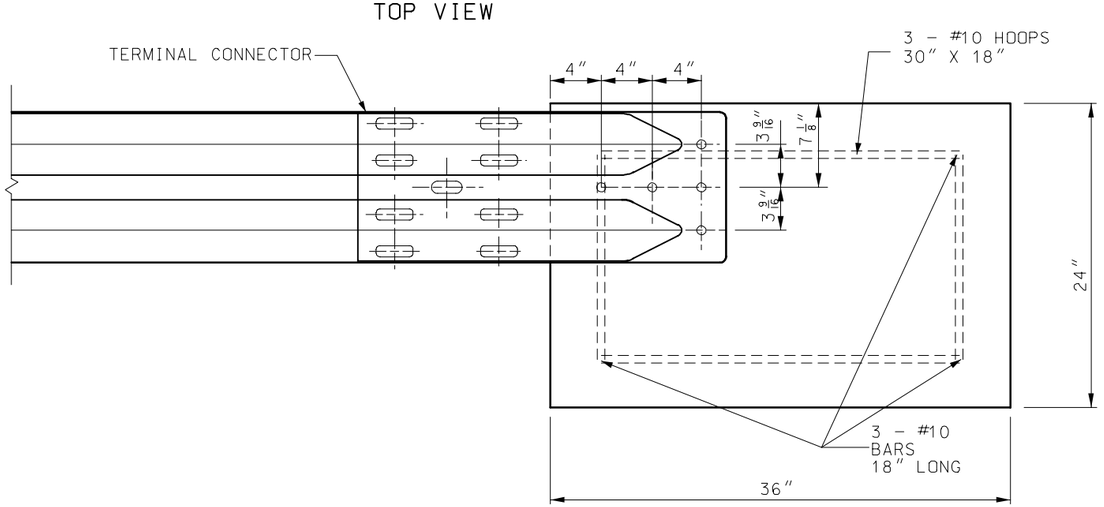


ELEVATION

## CONCRETE BLOCK ANCHOR
(24″ X 24″ X 36″)

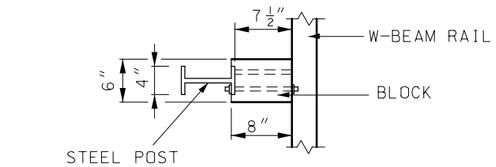


PLAN

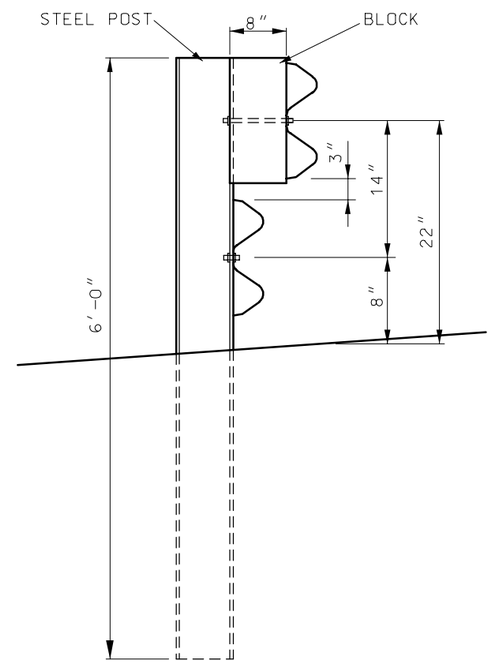


ELEVATION OF 6′ POST

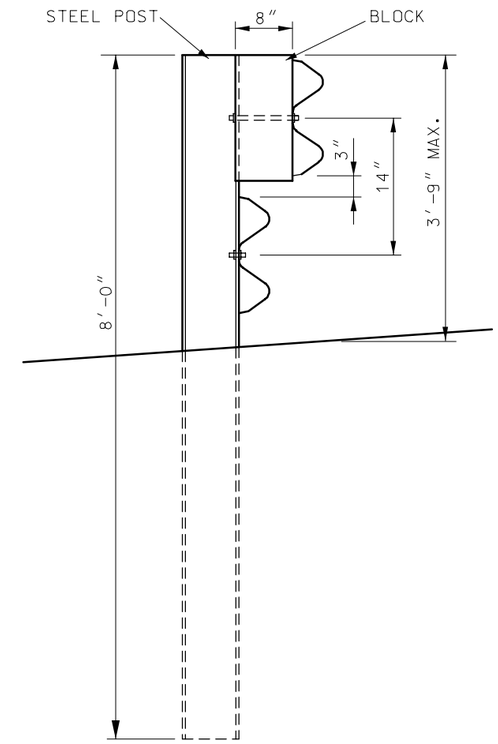


ELEVATION 8′ POST

## STEEL POST AND BLOCK DETAIL

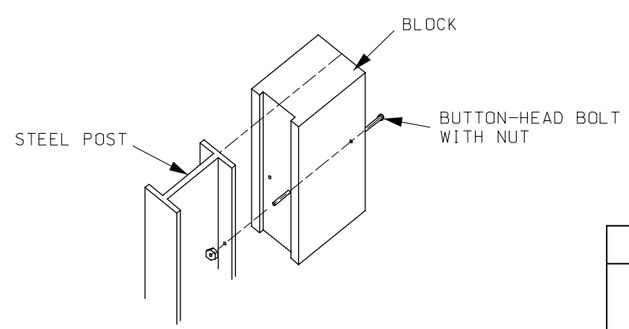


EXPLODED VIEW

(RAIL AND WASHER NOT SHOWN)

MISSOURI HIGHWAYS AND TRANSPORTATION COMMISSION

## GUARDRAIL
ANCHORED IN BACKSLOPE
GENERAL DETAILS

| DATE: | EFFECTIVE: 07-01-2004 | 606.00AQ | 15/16 |
|---|---|---|---|

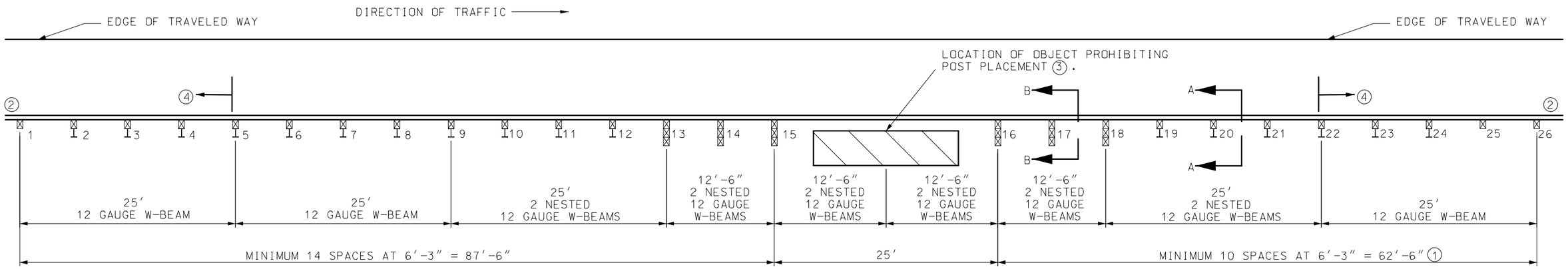


PLAN

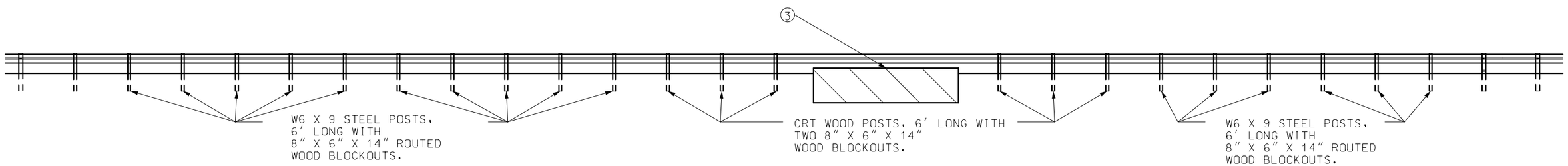


ELEVATION

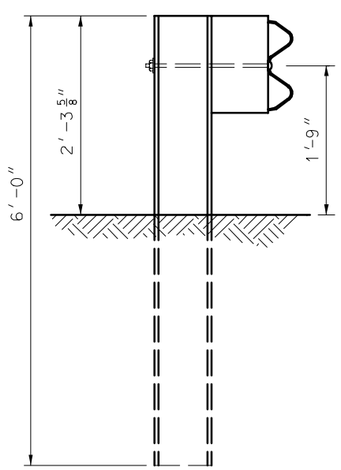


SECTION A-A

W6 X 9 STEEL POSTS, 6' LONG WITH 8" X 6" X 14" ROUTED WOOD BLOCKOUTS POSTS 3 THROUGH 12 AND 19 THROUGH 24.

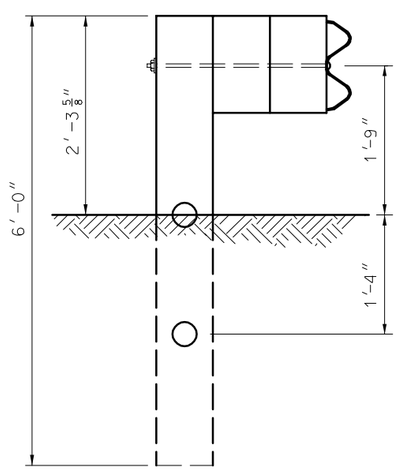


SECTION B-B

CRT WOOD POSTS, 6' LONG WITH TWO 8" X 6" X 14" WOOD BLOCKOUTS POSTS 13 THROUGH 18.

(1) IF LOCATED WITHIN THE CLEAR ZONE OF A TWO-WAY ROADWAY, THE MINIMUM LENGTH IS 87'-6".

(2) ADDITIONAL GUARDRAIL AS REQUIRED, INCLUDING END TREATMENT.

(3) THE POST MAY BE SKIPPED DUE TO THE PRESENCE OF AN OBSTACLE SUCH AS A CULVERT.

(4) PLACE END TREATMENT NO CLOSER TO THE SKIPPED POST THAN POSTS 5 AND 22.

MISSOURI HIGHWAYS AND TRANSPORTATION COMMISSION

**GUARDRAIL**
SKIPPING A POST
(MODIFIED LONG-SPAN GUARDRAIL SYSTEM)

DATE:_____ | EFFECTIVE: 07-01-2004 | **606.00AQ** | 16/16