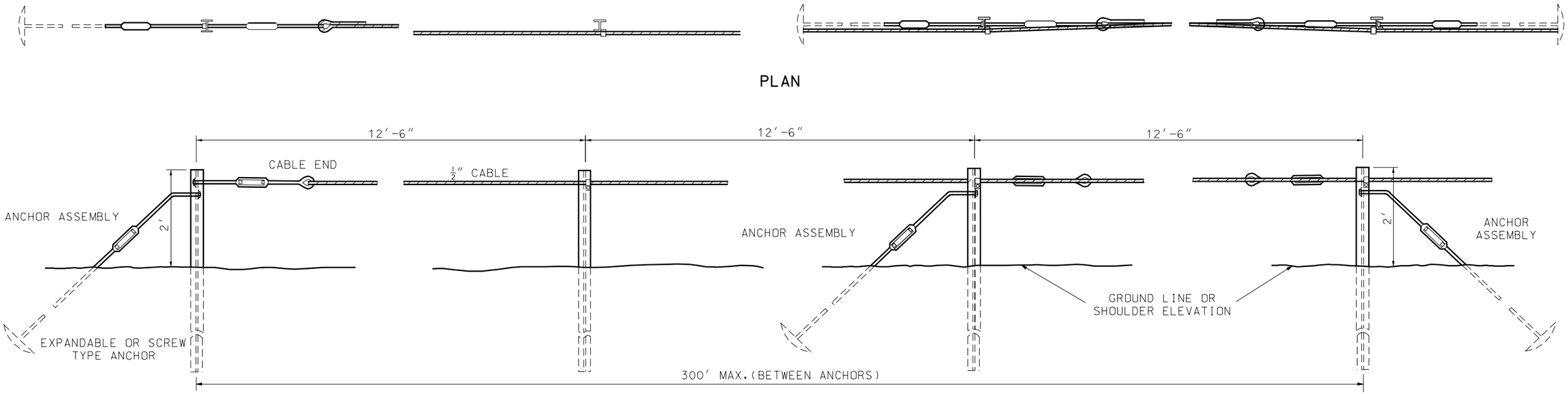

PLAN

END ANCHOR

LINE POST

INTERMEDIATE ANCHOR

ELEVATION

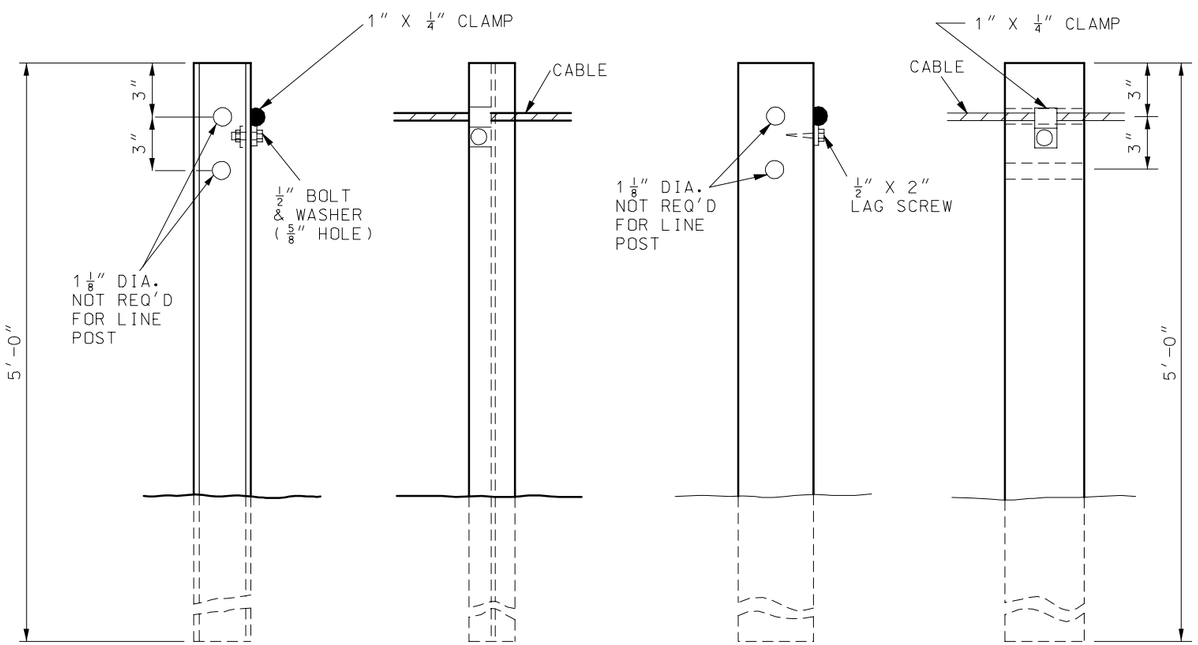

STEEL POST

(S3 X 5.7 STD. BEAM)

WOOD POST

(4″ X 4″ SQUARE OR 4″ ROUND)

POST DETAILS

MISSOURI HIGHWAYS AND TRANSPORTATION COMMISSION			
	ONE-STRAND ACCESS RESTRAINT CABLE		
DATE:_____	EFFECTIVE: 07-01-2004	606.40D	1/2

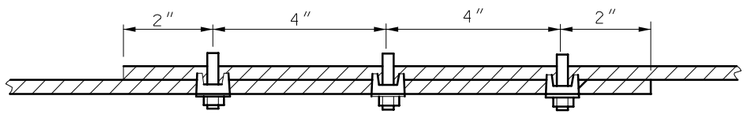

ACCESS-RESTRAINT CABLE GREATER THAN 300 FEET IN LENGTH REQUIRES AN INTER-MEDIATE ANCHOR AS SHOWN.

SPLICE DETAIL

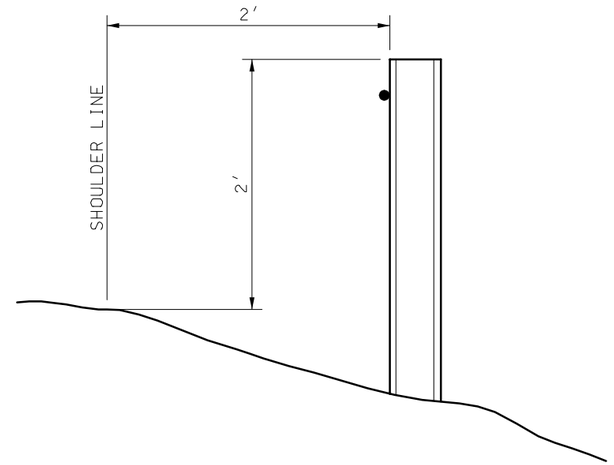

TYPICAL LOCATION SHOULDER INSTALLATION

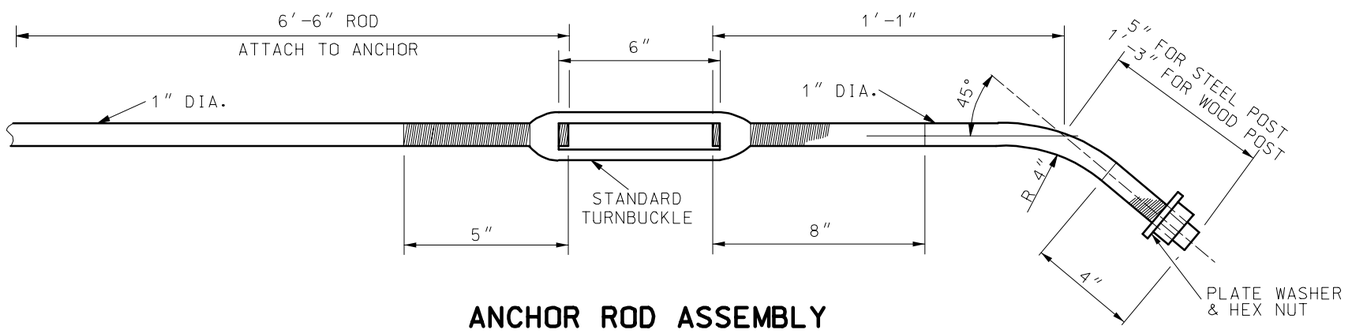

ANCHOR ROD ASSEMBLY

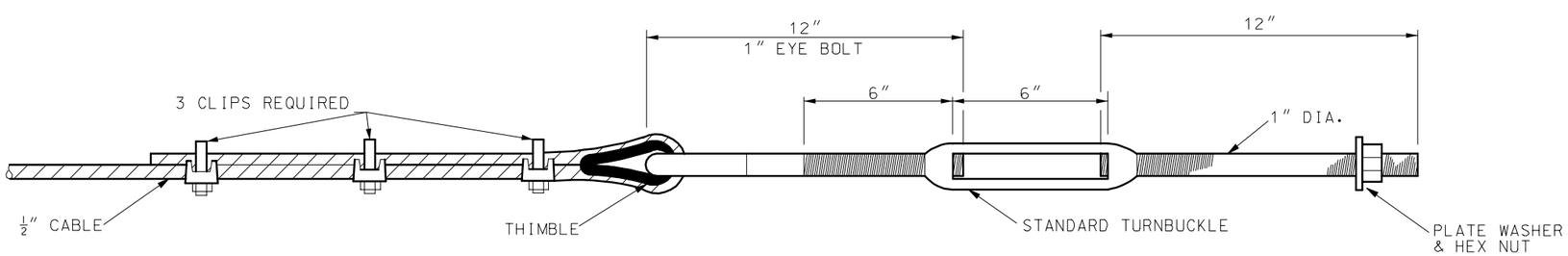

CABLE END

MISSOURI HIGHWAYS AND TRANSPORTATION COMMISSION			
	ONE-STRAND ACCESS RESTRAINT CABLE		
DATE:_____	EFFECTIVE: 07-01-2004	606.40D	2/2