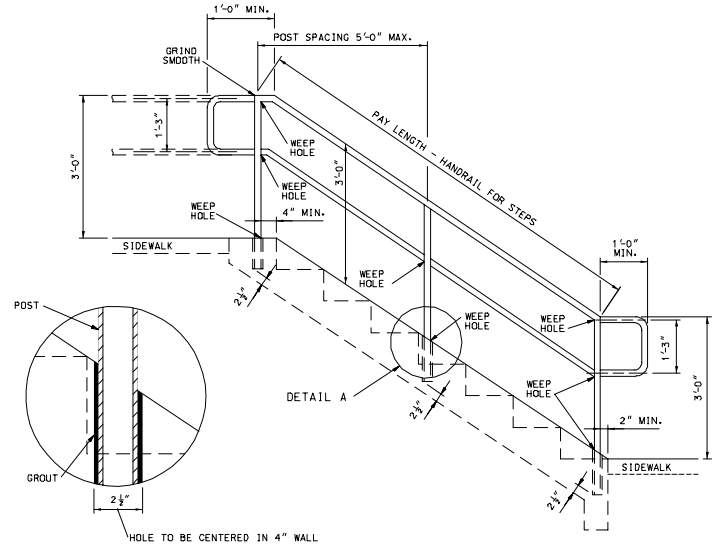

DETAIL A

HANDRAIL DETAILS

(IF SPECIFIED ON PLANS)

STEP DIMENSIONS				
SLOPE	TREAD	RISE	X	Y
1:1.5	12"	8"	11 11/16"	6"
1:2	12"	6"	10 3/8"	5 3/8"
1:3	14¼"	4¾"	9½"	5¼"

QUANTITIES FOR CONCRETE STEPS CONC. C.Y. STEEL LB.														
12" TREAD 1:1.5 SLOPE 8" RISE														
W	NO. STEPS	2	3	4	5	6	7	8	9	10	11	12	13	14
2'	CONC.	0.20	0.29	0.38	0.47	0.56	0.65	0.74	0.83	0.92	1.01	1.10	1.19	1.28
	STEEL	10	13	16	20	24	28	30	34	38	42	46	48	52
3'	CONC.	0.27	0.39	0.51	0.63	0.75	0.88	1.00	1.12	1.24	1.36	1.48	1.60	1.73
	STEEL	13	18	21	27	32	38	41	46	52	57	63	65	71
4'	CONC.	0.34	0.49	0.64	0.80	0.95	1.10	1.25	1.40	1.56	1.71	1.86	2.01	2.17
	STEEL	17	23	27	34	41	48	52	59	66	73	80	83	90
5'	CONC.	0.41	0.59	0.78	0.96	1.14	1.33	1.51	1.69	1.88	2.06	2.24	2.42	2.61
	STEEL	21	28	33	42	50	59	63	71	80	88	97	101	109
6'	CONC.	0.48	0.70	0.91	1.12	1.34	1.55	1.77	1.98	2.19	2.41	2.62	2.84	3.05
	STEEL	24	33	39	49	59	69	74	84	94	104	114	118	128
12" TREAD 1:2 SLOPE 6" RISE														
W	NO. STEPS	2	3	4	5	6	7	8	9	10	11	12	13	14
2'	CONC.	0.18	0.26	0.33	0.41	0.49	0.56	0.64	0.72	0.80	0.87	0.95	1.03	1.10
	STEEL	10	12	16	19	23	25	29	33	36	39	42	46	50
3'	CONC.	0.25	0.35	0.45	0.56	0.66	0.76	0.87	0.97	1.07	1.18	1.28	1.38	1.49
	STEEL	13	16	21	26	32	34	39	45	50	53	58	63	68
4'	CONC.	0.31	0.44	0.57	0.70	0.83	0.96	1.09	1.22	1.35	1.48	1.61	1.74	1.87
	STEEL	17	20	27	33	40	44	50	57	63	67	73	81	87
5'	CONC.	0.38	0.53	0.69	0.85	1.00	1.16	1.31	1.47	1.63	1.78	1.94	2.10	2.25
	STEEL	21	25	33	41	49	53	61	69	77	82	89	98	105
6'	CONC.	0.44	0.62	0.81	0.99	1.17	1.36	1.54	1.72	1.90	2.09	2.27	2.45	2.64
	STEEL	24	29	39	48	58	62	71	81	90	96	105	115	124
14¼" TREAD 1:3 SLOPE 4¾" RISE														
W	NO. STEPS	2	3	4	5	6	7	8	9	10	11	12	13	14
2'	CONC.	0.19	0.27	0.35	0.43	0.51	0.59	0.68	0.76	0.84	0.92	1.00	1.08	1.16
	STEEL	10	14	18	21	25	29	33	37	41	43	47	51	55
3'	CONC.	0.26	0.37	0.48	0.59	0.70	0.80	0.91	1.02	1.13	1.24	1.35	1.46	1.56
	STEEL	14	19	25	28	34	39	45	50	56	59	65	70	76
4'	CONC.	0.33	0.47	0.61	0.74	0.88	1.02	1.15	1.29	1.42	1.56	1.70	1.83	1.97
	STEEL	18	25	32	36	43	50	57	64	71	75	82	89	96
5'	CONC.	0.40	0.57	0.73	0.90	1.06	1.22	1.39	1.55	1.72	1.88	2.05	2.21	2.38
	STEEL	22	30	39	44	52	61	69	78	86	91	100	108	117
6'	CONC.	0.47	0.66	0.86	1.05	1.24	1.43	1.63	1.82	2.01	2.21	2.40	2.59	2.78
	STEEL	25	35	45	51	61	71	81	91	101	107	117	127	137

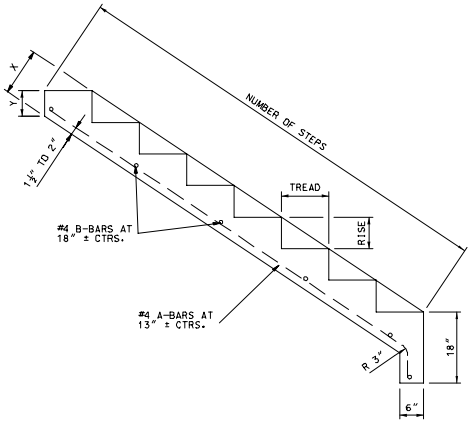

SIDE ELEVATION

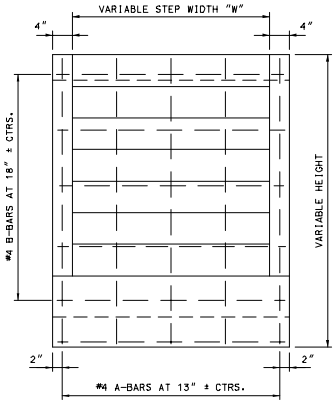

FRONT ELEVATION

RAILING & POST SPECIFICATIONS			
TYPE	SIZE (DIA.)	WEIGHT (LBS./FT.)	
		ALUM.	STEEL
ROUND	1½"	0.940	2.72
SQUARE	2" X 2"	1.3094	4.31

GENERAL NOTES:

STAIRWAY SHALL HAVE HANDRAILS AT BOTH SIDES OF ALL STEPS.

RAILINGS AND POSTS MAY BE EITHER ROUND OR SQUARE STEEL OF GOOD COMMERCIAL WELDABLE QUALITY OR ALUMINUM ALLOY 6061-T6 OR 6063-T6.

STEEL RAILINGS AND POSTS SHALL BE GALVANIZED AFTER FABRICATION IN ACCORDANCE WITH AASHTO M111.

ALL JOINTS SHALL BE CONTINUOUS WELDED.

STAIRWAY STEP DETAILS

MISSOURI HIGHWAY AND TRANSPORTATION COMMISSION

CONCRETE STAIRS

DATE:_____ EFFECTIVE: 10-01-1992 608.20D 1/1