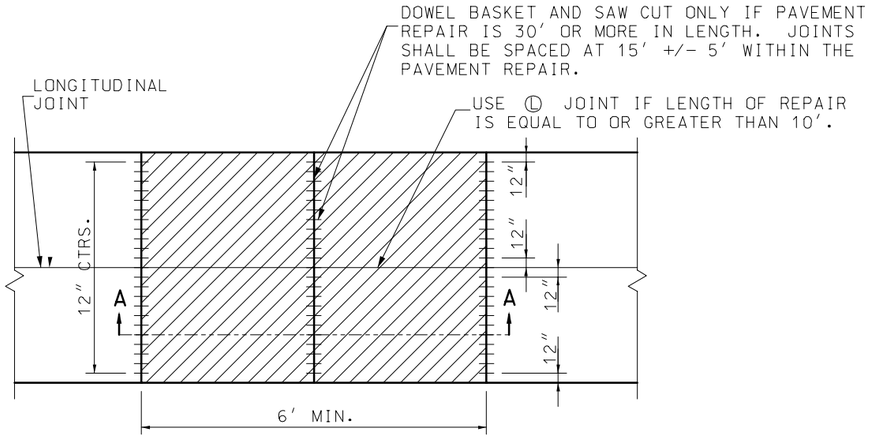

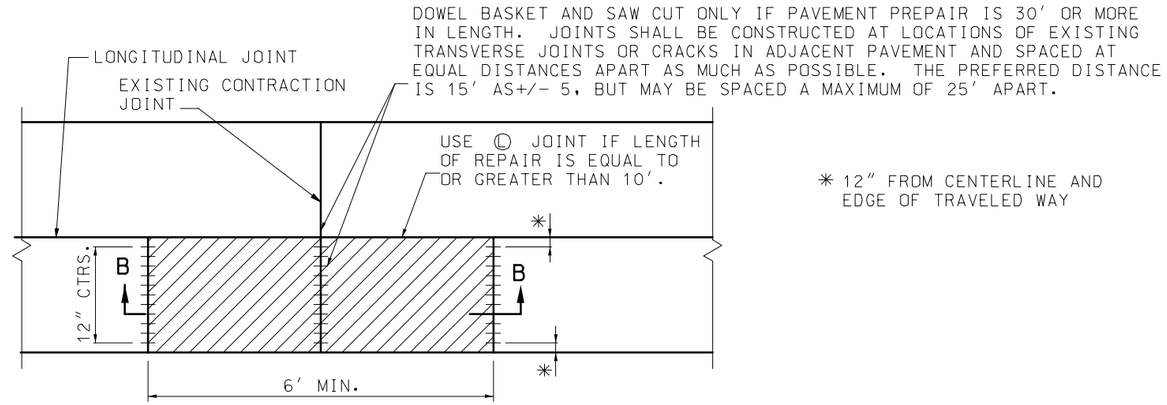

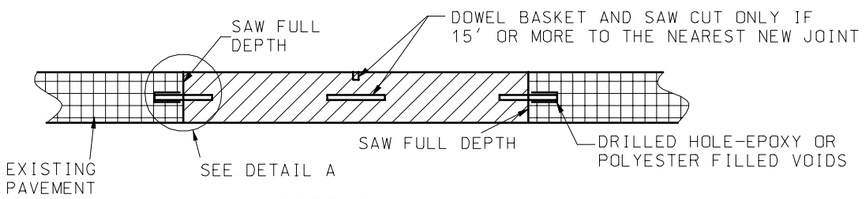

SECTION A-A

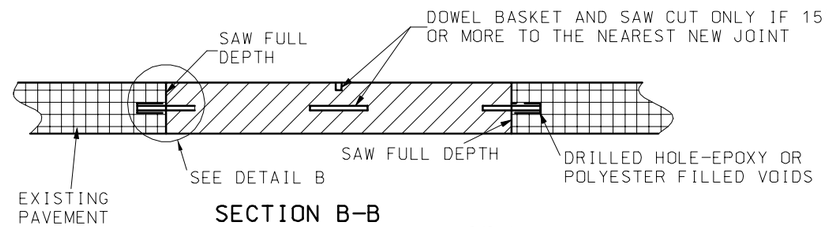

SECTION B-B

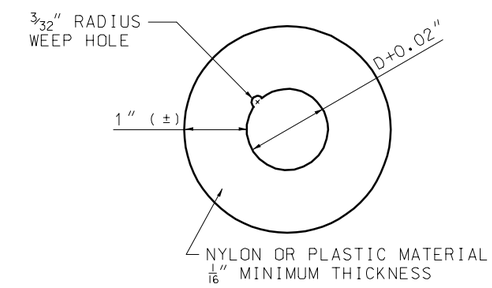

DETAIL C
THIN CIRCULAR DISK

D = DOWEL OR TIE BAR DIAMETER (INCLUDING PROTECTIVE COATINGS, IF ANY)

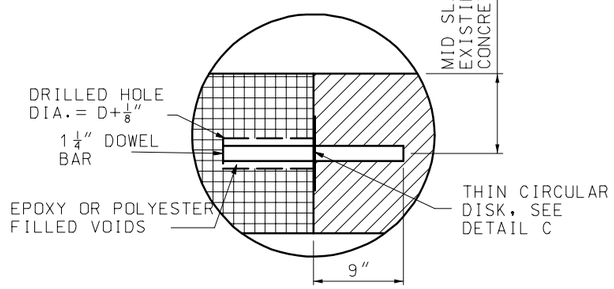

DETAIL A

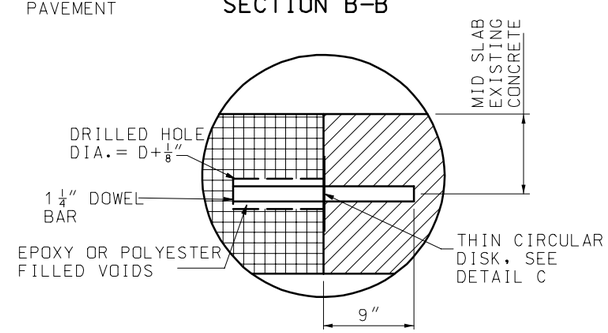

DETAIL B

1. INSTALL TYPE Ⓛ JOINT IN LONGITUDINAL JOINT WHERE LENGTH OF REPAIR IS 10′ OR GREATER.
2. STANDARD WIRE FABRIC REINFORCING SHALL BE USED IN PATCHES HAVING DISTANCES BETWEEN TRANSVERSE JOINTS OF > 15′.
3. 1-1/4″ SMOOTH EPOXY COATED DOWELS SHALL BE USED IN ALL CLASS A PAVEMENT REPAIR TRANSVERSE JOINTS.
4. THE ANCHORING MATERIAL (EPOXY OR POLYESTER) SHALL BE PLACED TO THE BACK OF THE PREDRILLED HOLE BEFORE INSERTING THE DOWEL OR TIE BAR.
5. THE DOWEL IS INSERTED INTO THE HOLE WITH A TWISTING MOTION SO THAT THE MATERIAL IN THE BACK OF THE HOLE IS FORCED UP AND AROUND THE BAR.
6. EXPOSED END OF DOWEL SHALL BE COATED WITH A THIN UNIFORM COAT OF GRAPHITE GREASE. DOWEL BASKET ASSEMBLIES SHALL BE CONSTRUCTED IN ACCORDANCE WITH STANDARD PLAN 502.10. IN LIEU OF GRAPHITE GREASE, THE DOWEL BAR BASKET SUPPLIER MAY PROVIDE COMPLETED BASKET UNITS PRE-DIPPED IN AN APPROVED BONDBREAKER.
7. REPAIR ONLY ONE LANE AT A TIME.
8. D = DOWEL DIAMETER (INCLUDING PROTECTIVE COATING, IF ANY).

TWO OR MORE LANES

1. STANDARD WIRE FABRIC REINFORCING SHALL BE USED IN PATCHES HAVING DISTANCES BETWEEN TRANSVERSE JOINTS OF > 15′.
2. 1 1/4″ SMOOTH EPOXY COATED DOWELS SHALL BE USED IN ALL CLASS A PAVEMENT REPAIR TRANSVERSE JOINTS.
3. THE ANCHORING MATERIAL (EPOXY OR POLYESTER) SHALL BE PLACED TO THE BACK OF THE PREDRILLED HOLE BEFORE INSERTING THE TIE BAR.
4. THE TIE BAR IS INSERTED INTO THE HOLE WITH A TWISTING MOTION SO THAT THE MATERIAL IN THE BACK OF THE HOLE IS FORCED UP AND AROUND THE BAR.
5. EXPOSED END OF DOWEL SHALL BE COATED WITH A THIN UNIFORM COAT OF GRAPHITE GREASE. DOWEL BASKET ASSEMBLIES SHALL BE CONSTRUCTED IN ACCORDANCE WITH STANDARD PLAN 502.10. IN LIEU OF GRAPHITE GREASE, THE DOWEL BAR BASKET SUPPLIER MAY PROVIDE COMPLETED BASKET UNITS PRE-DIPPED IN AN APPROVED BONDBREAKER.
6. D = DOWEL DIAMETER (INCLUDING PROTECTIVE COATING, IF ANY).

ONE LANE

GENERAL NOTES:

ALL SAW CUTS SHALL BE MADE WITH A DIAMOND SAW EXCEPT THE CENTER RELIEF CUT.

FOR DETAILS OF TYPE Ⓛ JOINT. SEE STANDARD PLAN 502.05.

FIBER REINFORCING MAY BE SUBSTITUTED FOR STANDARD WIRE FABRIC REINFORCING WHEN APPROVED BY THE ENGINEER.

MISSOURI HIGHWAYS AND TRANSPORTATION COMMISSION

PAVEMENT REPAIR
CLASS A

DATE:_____ | EFFECTIVE: 01-01-2005 | **613.00L** | 1/2

NON-REINFORCED AND REINFORCED PORTLAND CEMENT CONCRETE

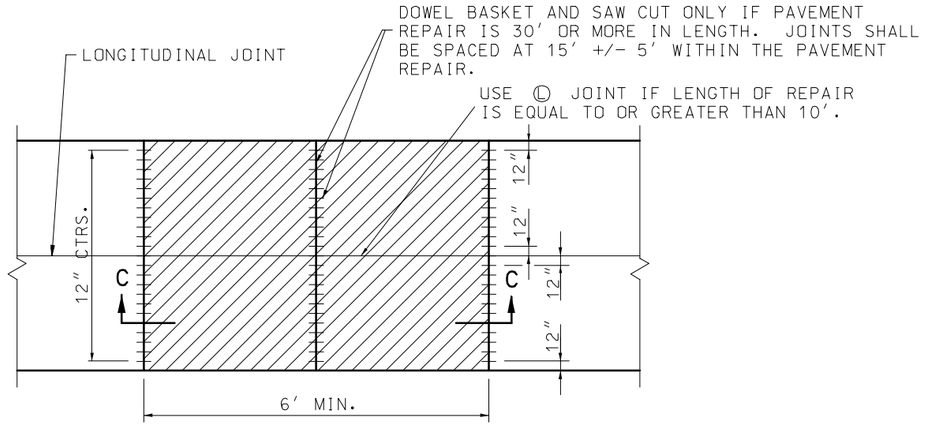

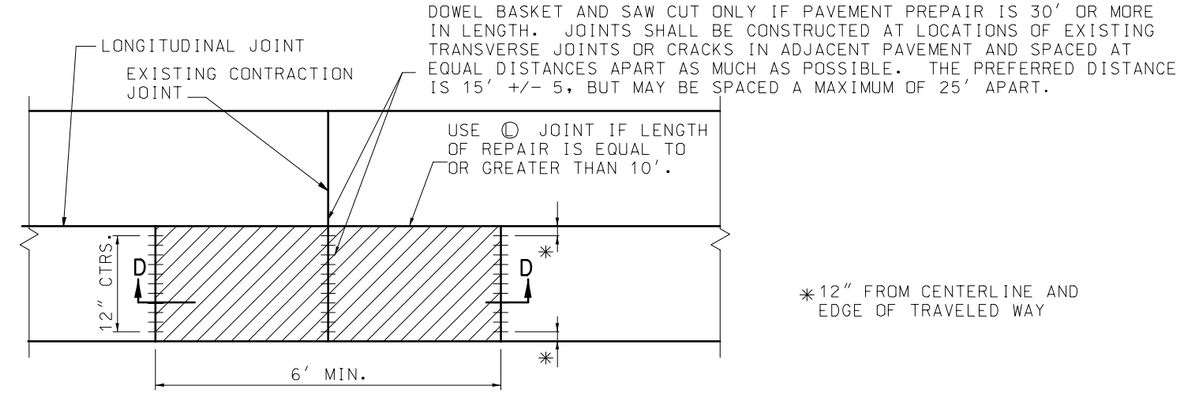

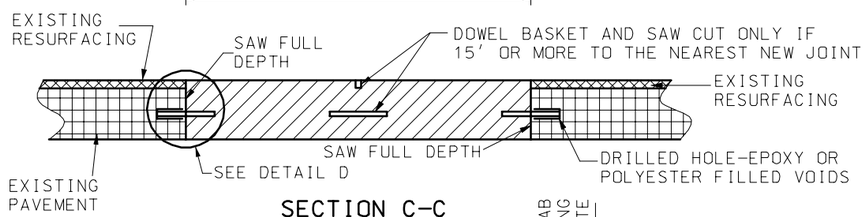

SECTION C-C

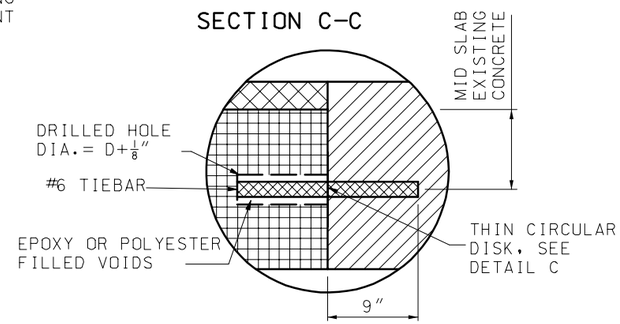

DETAIL D

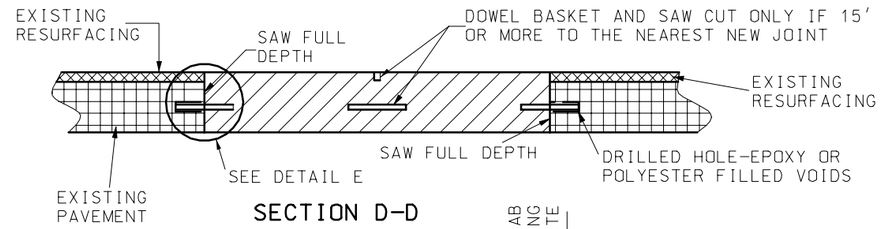

SECTION D-D

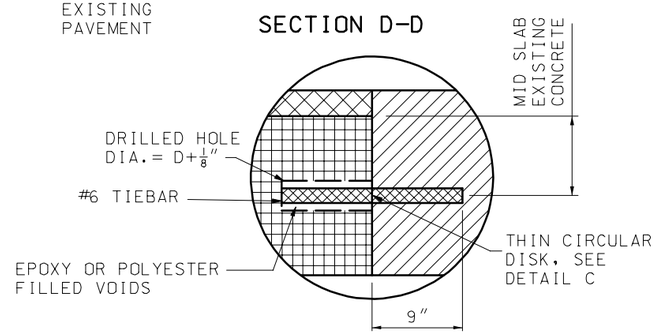

DETAIL E

1. INSTALL TYPE L JOINT IN LONGITUDINAL JOINT WHERE LENGTH OF REPAIR IS 10′ OR GREATER.
2. STANDARD WIRE FABRIC REINFORCING SHALL BE USED IN PATCHES HAVING DISTANCES BETWEEN TRANSVERSE JOINTS OF > 15′.
3. #6 EPOXY COATED BARS SHALL BE USED IN ALL CLASS B PAVEMENT REPAIR TRANSVERSE JOINTS.
4. THE ANCHORING MATERIAL (EPOXY OR POLYESTER) SHALL BE PLACED TO THE BACK OF THE PREDRILLED HOLE BEFORE INSERTING THE TIE BAR.
5. THE TIE BAR IS INSERTED INTO THE HOLE WITH A TWISTING MOTION SO THAT THE MATERIAL IN THE BACK OF THE HOLE IS FORCED UP AND AROUND THE BAR.
6. REPAIR ONLY ONE LANE AT A TIME.
7. D = TIE BAR DIAMETER (INCLUDING PROTECTIVE COATING, IF ANY).
8. FINISH CONCRETE TO EXISTING PAVEMENT SURFACE LEVEL.
9. HOLE SHALL BE LARGE ENOUGH TO ALLOW FREE HAND TURNING OF THE BAR, BUT NOT TO EXCEED THE BAR DIAMETER BY MORE THAN 1/4″.
10. DOWEL BASKET ASSEMBLIES SHALL BE CONSTRUCTED IN ACCORDANCE WITH STANDARD PLAN 502.10.

TWO OR MORE LANES

1. STANDARD WIRE FABRIC REINFORCING SHALL BE USED IN PATCHES.
2. #6 EPOXY COATED BARS SHALL BE USED IN ALL CLASS B PAVEMENT REPAIR TRANSVERSE JOINTS.
3. THE ANCHORING MATERIAL (EPOXY OR POLYESTER) SHALL BE PLACED TO THE BACK OF THE PREDRILLED HOLE BEFORE INSERTING THE TIE BAR.
4. THE TIE BAR IS INSERTED INTO THE HOLE WITH A TWISTING MOTION SO THAT THE MATERIAL IN THE BACK OF THE HOLE IS FORCED UP AND AROUND THE BAR.
5. D = TIE BAR DIAMETER (INCLUDING PROTECTIVE COATING, IF ANY).
6. FINISH CONCRETE TO EXISTING PAVEMENT SURFACE LEVEL.
7. HOLE SHALL BE LARGE ENOUGH TO ALLOW FREE HAND TURNING OF THE BAR, BUT NO TO EXCEED THE BAR DIAMETER BY MORE THAN 1/4″
8. DOWEL BASKET ASSEMBLIES SHALL BE CONSTRUCTED IN ACCORDANCE WITH STANDARD PLAN 502.10.

ONE LANE

GENERAL NOTES:

ALL SAW CUTS SHALL BE MADE WITH A DIAMOND SAW EXCEPT THE CENTER RELIEF CUT.

FOR DETAILS OF TYPE Ⓛ JOINT. SEE STANDARD PLAN 502.05.

FIBER REINFORCING MAY BE SUBSTITUTED FOR STANDARD WIRE FABRIC REINFORCING WHEN APPROVED BY THE ENGINEER.

NON-REINFORCED AND REINFORCED PORTLAND CEMENT CONCRETE

MISSOURI HIGHWAYS AND TRANSPORTATION COMMISSION

PAVEMENT REPAIR
CLASS B

DATE:_____ | EFFECTIVE:01-01-2005 | **613.00L** | 2/2