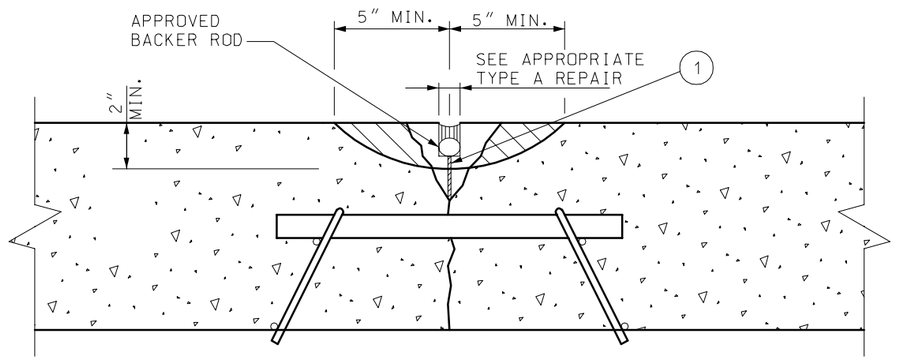

MILLING OPTION

1 THE INITIAL RE-ESTABLISHMENT OF THE JOINT OR CRACK IN THE PLASTIC CONCRETE SHALL BE ACCOMPLISHED WITH AN APPROVED CUTTER BAR OR WITH MINIMUM 1/4" COMPRESSION RELIEF MATERIAL (SAWING NOT ALLOWED).

JOINT COMPRESSION RELIEF TO THE TOP OF THE DOWEL BARS SHALL BE PROVIDED BY A MINIMUM 1/4" SAWCUT AS SOON AS POSSIBLE AFTER INITIAL SET OR MINIMUM 1/4" COMPRESSION RELIEF MATERIAL AS NOTED ABOVE.

AREA TO BE REMOVED

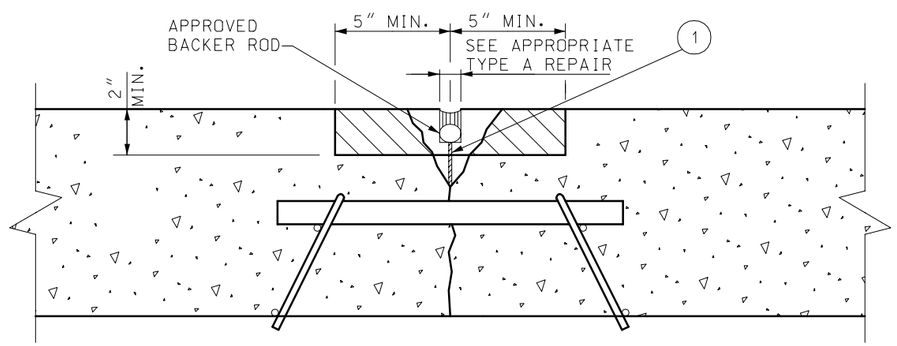

SAWING OPTION

GENERAL NOTES:

THE LIMITS OF THE REMOVAL AREA WILL BE DEFINED BY THE ENGINEER.

ALL CONCRETE SHALL BE REMOVED TO LIMITS SHOWN IN THE DETAIL, INCLUDING DETERIORATED CONCRETE TO A MAXIMUM OF 1/2 THE PAVEMENT DEPTH OR TOP OF DOWELS BY MILLING.

EXPOSED SURFACE SHALL BE CLEANED BY SANDBLASTING, HIGH-PRESSURE WATER BLASTING OR OTHER METHODS APPROVED BY THE ENGINEER.

EXPOSED SURFACES OF DOWELS, IF ANY, SHALL BE COATED WITH AN APPROVED BOND BREAKER.

JOINTS AND CRACKS SHALL BE SEALED WITH APPROPRIATE SEALER.

MISSOURI HIGHWAYS AND TRANSPORTATION COMMISSION

PARTIAL DEPTH PAVEMENT REPAIR AT JOINTS AND CRACKS

CLASS A

DATE:_____	EFFECTIVE: 07-01-2004	613.20	1/1