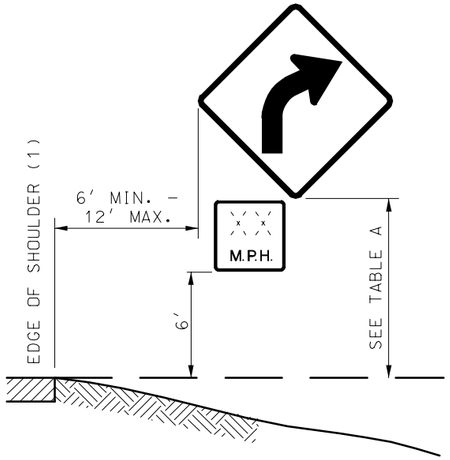

(1) EDGE OF TRAVELED WAY WHERE THERE IS NO PAVED OR STABILIZED SHOULDER.

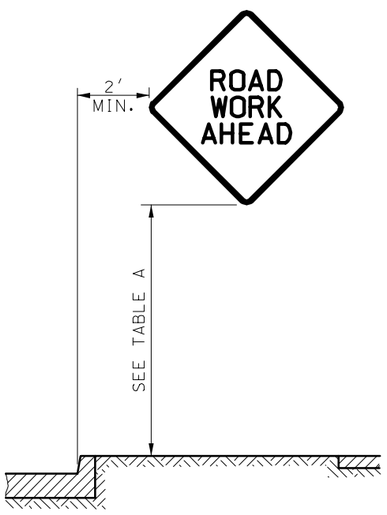

HEIGHT AND LATERAL LOCATIONS FOR POST AND PORTABLE SIGN MOUNTING

WORK ZONE ACTIVITY	SIGN CLASSIFICATION	MOUNTING METHOD	MINIMUM MOUNTING HEIGHT
DAYTIME OPERATIONS	WARNING	1, 2	7 FT.
		3, 4	12 IN.
	GUIDE AND REGULATORY	1, 2	7 FT.
		3, 4	5 FT.
NIGHTTIME OPERATIONS	WARNING, GUIDE AND REGULATORY	1, 2	7 FT.
		3, 4	5 FT.
INACTIVE OR CONTINUOUS OPERATIONS	WARNING, GUIDE AND REGULATORY	1, 2, 4	7 FT.

WORK ZONE ACTIVITY:
- DAYTIME OPERATION – AN ACTIVITY WHERE WORKERS ARE PRESENT ANY TIME FROM DAWN TO DUSK.
- NIGHTTIME OPERATION – AN ACTIVITY WHERE WORKERS ARE PRESENT ANY TIME FROM DUSK TO DAWN.
- INACTIVE OPERATION – NO ACTIVITY OCCURRING ON SITE IN WORK ZONE (DAY, NIGHT, WEEKEND, OFF-SEASON OR OTHER EXTENDED PERIOD OF TIME).
- CONTINUOUS OPERATION – AN ACTIVITY WHERE SIGNS REMAIN IN PLACE 24 HOURS OR LONGER.

SIGN CLASSIFICATION:
REFER TO STANDARD DRAWING 616.10, SHEETS 6, 7, 8 AND 9 OF 9.

MOUNTING METHOD:
1. POST – GROUND-MOUNTED SIGN SUPPORT SYSTEM WITH RIGID SIGN SUBSTRATE.
2. PORTABLE – SKID-MOUNTED OR OTHER SIGN SUPPORT SYSTEM WITH RIGID SIGN SUBSTRATE PERMITTED WHERE POST MOUNTING IS NOT FEASIBLE.
3. TEMPORARY – LIGHTWEIGHT SIGN SUPPORT SYSTEM WITH ROLL-UP OR RIGID SIGN SUBSTRATE.
4. BARRIER – SIGN SUPPORT SYSTEM WITH ROLL-UP OR RIGID SIGN SUBSTRATE PERMITTED WHERE BARRIER IS PRESENT. MUST ASSURE POSITIVE CONNECTION TO BARRIER WITHOUT POTENTIAL FOR VEHICLE SNAGGING.

MOUNTING HEIGHT:
VERTICAL HEIGHT OF SIGN MEASURED FROM THE BOTTOM OF THE SIGN TO THE NEAR EDGE OF PAVEMENT.

TABLE A
WORK ZONE SIGN MOUNTING REQUIREMENTS

	POST TYPE		
SIGN AREA (SQ.FT.)	U-CHANNEL	WOOD	PERF. SQUARE STEEL TUBING
≤ 10	1 – 3.0 LB./FT.*	1 – 4″ X 4″*	1 – 2″ 12 GA.*
> 10 ≤ 16	2 – 3.0 LB./FT.	2 – 4″ X 4″ 1 – 4″ X 6″*	2 – 2″ 12 GA.
> 16 ≤ 24	2 – 3.0 LB./FT.	2 – 4″ X 6″	3 – 2″ 12 GA.**
> 24 ≤ 30	3 – 3.0 LB./FT.	2 – 4″ X 6″	N/A
> 30 ≤ 50	N/A	2 – 6″ X 6″	N/A

* SIGNS GREATER THAN 4 FEET IN WIDTH, EXCEPT DIAMOND SHAPE SIGNS, REQUIRE TWO POSTS.

** REQUIRES SLIP BASE PER MANUFACTURER'S RECOMMENDATION.

TABLE B
POST SIZE REQUIREMENTS

GENERAL NOTES:

ALL SIGN SUPPORT SYSTEMS SHALL COMPLY WITH CRASH TEST REQUIREMENTS OF NCHRP 350 TEST LEVEL 3 EXCEPT FOR THOSE MOUNTED ON BARRIERS.

LONGITUDINAL SPACING OF SIGNS SHOWN IN THE PLANS ARE PREFERRED MINIMUMS, BUT MAY BE ADJUSTED TO MEET EXISTING FIELD CONDITIONS WITH APPROVAL FROM THE ENGINEER.

SIGNS MOUNTED ON PORTABLE OR TEMPORARY SUPPORTS MAY BE PLACED WITHIN THE ROADWAY ITSELF WITH THE APPROVAL OF THE ENGINEER.

SIGNS SHALL NOT BE MOUNTED IN OR ON CHANNELIZERS.

ALL POSTS AND SIGNS SHALL BE INSTALLED AND MAINTAINED IN A PLUMB POSITION.

ALL POSTS SHALL BE EMBEDDED A MINIMUM OF 3 FEET.

BRACING OF SUPPORT POSTS WILL NOT BE ALLOWED.

SIGNS MOUNTED ON TEMPORARY SIGN SUPPORT SYSTEMS SHALL BE WITHIN 30° OF A VERTICAL POSITION FOR DAYTIME OPERATIONS AND WITHIN 5° OF A VERTICAL POSITION FOR NIGHTTIME OPERATIONS.

CONSTRUCTION SIGNS SHALL NOT BE LOCATED ON SIDEWALKS, BICYCLE LANES, OR AREAS DESIGNATED FOR PEDESTRIAN OR BICYCLE TRAFFIC.

SUPPORT POST SHALL NOT EXTEND ABOVE THE SIGN UNLESS NEEDED FOR WARNING LIGHT ATTACHMENT.

ALL BATTERY PACKS SEPARATE FROM WARNING LIGHT SHALL BE MOUNTED ON A SUPPORT POST NO HIGHER THAN 18″ ABOVE GROUND LINE. IF USED, WARNING LIGHTS SHALL NOT COVER ANY PORTION OF THE SIGN FACE.

WHERE TEMPORARY SIGNS MAY BE OBSCURED BY PHYSICAL FEATURES (I.E. OTHER TRAFFIC CONTROL DEVICES PARKED CARS, BARRIERS, ETC.), SIGNS SHALL BE MOUNTED AT A MINIMUM OF 5 FEET.

SEE STANDARD PLAN 903.03 FOR U-CHANNEL, WOOD AND PERFORATED SQUARE STEEL TUBE POST DETAILS.

MISSOURI HIGHWAYS AND TRANSPORTATION COMMISSION

TEMPORARY TRAFFIC CONTROL DEVICES
SIGN MOUNTING REQUIREMENTS

DATE:_____ EFFECTIVE: 07-01-2004 **616.10AE** 1/8

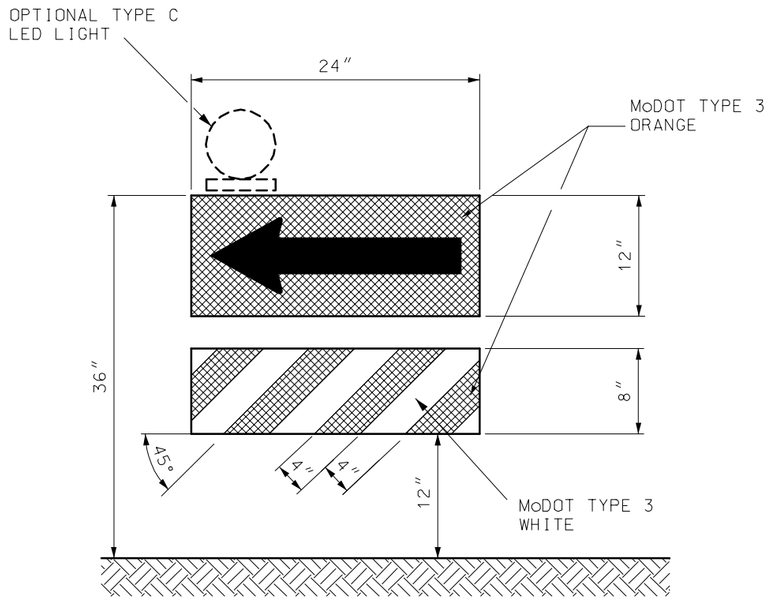

DIRECTION INDICATOR BARRICADE

UPON APPROVAL FROM THE ENGINEER, DIRECTION INDICATOR BARRICADES MAY BE USED IN LIEU OF DRUM-LIKE CHANNELIZERS FOR MERGE TAPERS. NO ADDITIONAL COMPENSATION WILL BE MADE. DIRECTION INDICATOR BARRICADES SHALL NOT BE USED IN SHIFTING TAPERS UNLESS SHOWN ON THE PLANS.

THE PANELS SHALL BE SECURELY ATTACHED TO A SUPPORT THAT IS PORTABLE, CAPABLE OF REMAINING UPRIGHT AND ENTIRELY FREE STANDING.

SHEETING SHALL ONLY BE APPLIED TO TRAFFIC SIDE OF BARRICADE.

DETAIL SHOWN IS FOR INSTANCES WHERE TRAFFIC IS REQUIRED TO MOVE TO THE LEFT. FOR INSTANCES WHERE TRAFFIC IS REQUIRED TO MOVE TO THE RIGHT, THE REVERSE CONFIGURATION SHALL BE ASSEMBLED.

STRIPES ON TRIM-LINE CHANNELIZERS SHALL BE 6″ TO 8″. STRIPES ON DRUM-LIKE CHANNELIZERS SHALL BE 4″ TO 6″.

VERTICAL DIMENSIONS DO NOT INCLUDE PROJECTIONS DESIGNED FOR EASE OF HANDLING.

TRIM-LINE CHANNELIZERS SHALL BE MANUFACTURED FROM LOW DENSITY POLYETHYLENE PLASTIC.

CONES SHALL MAINTAIN THEIR SHAPE UPON EXPOSURE TO NORMAL WORK CONDITIONS.

CONES SHALL BE USED DURING DAYLIGHT HOURS ONLY.

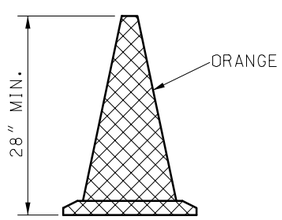

CONE

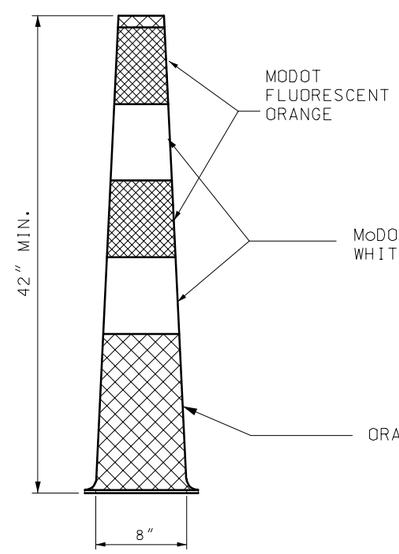

TRIM-LINE

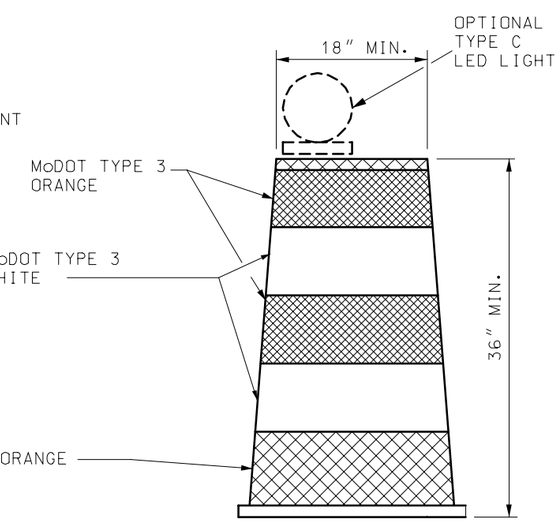

DRUM-LIKE

CHANNELIZERS

GENERAL NOTES:

BALLAST FOR TRAFFIC CONTROL DEVICES SHALL CONFORM TO MANUFACTURERS' RECOMMENDATION FOR FIELD CONDITIONS WHEN APPLICABLE.

IF REQUIRED BY THE ENGINEER OR SPECIFIED ON THE PLANS, EACH DIRECTION INDICATOR BARRICADE OR DRUM-LIKE CHANNELIZER SHALL BE EQUIPPED WITH ONE TYPE C LED PORTABLE LIGHT UNIT. IF USED, THE LIGHT UNIT AND BATTERY COMPARTMENT SHALL BE FURNISHED BY THE DEVICE MANUFACTURER OR OTHERWISE MEET THE MANUFACTURER'S RECOMMENDATIONS FOR DESIGN AND WILL BE REQUIRED ON ALL DEVICES IN THE SERIES.

MISSOURI HIGHWAYS AND TRANSPORTATION COMMISSION

TEMPORARY TRAFFIC CONTROL DEVICES
CHANNELIZERS AND DIRECTION INDICATOR BARRICADE

DATE:_____ EFFECTIVE: 07-01-2004 **616.10AE** 2/8

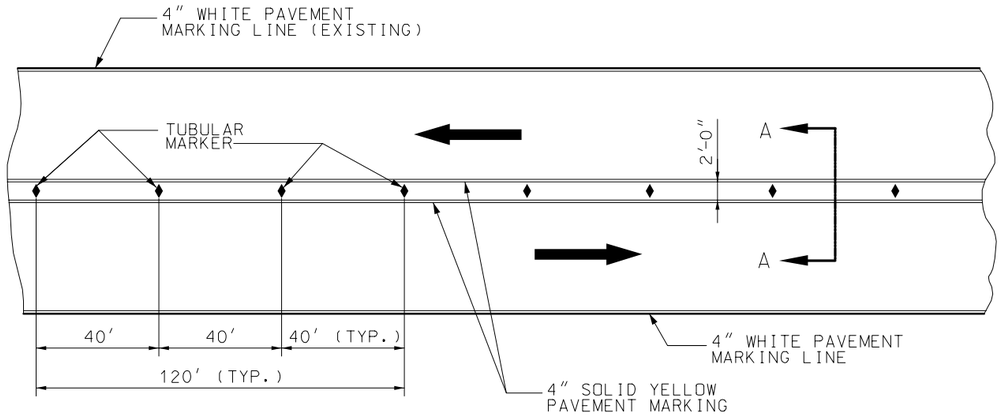

TWO LANE / TWO WAY TRAFFIC DELINEATION PLAN FOR DIVIDED HIGHWAY

IF RAISED PAVEMENT MARKERS ARE PRESENT, THE LENSES SHALL BE REMOVED OR COVERED TO THE SATISFACTION OF THE ENGINEER.

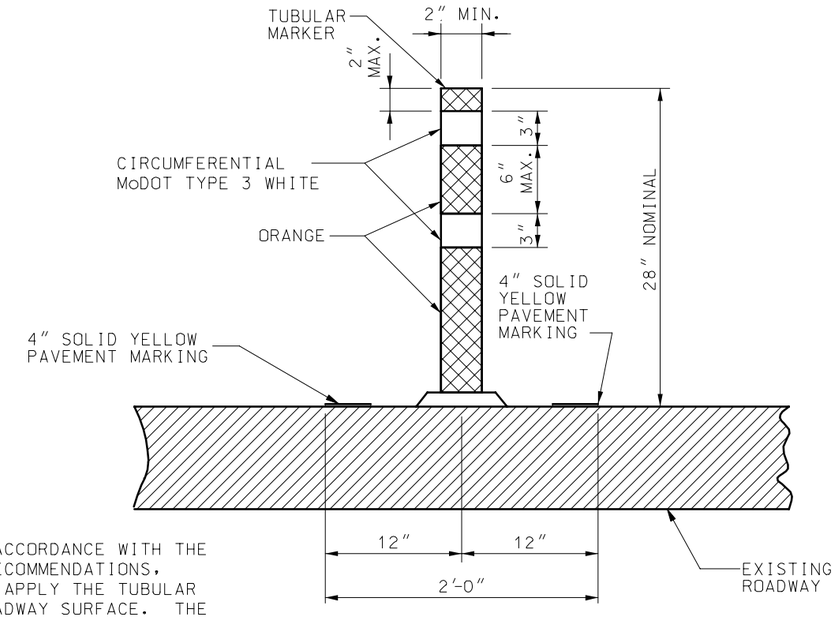

AN ADHESIVE, IN ACCORDANCE WITH THE MANUFACTURER'S RECOMMENDATIONS, SHALL BE USED TO APPLY THE TUBULAR MARKER TO THE ROADWAY SURFACE. THE ADHESIVE SHALL PERMIT EASY REMOVAL OF THE TUBULAR MARKER WITHOUT DAMAGE TO THE ROADWAY SURFACE.

SECTION A-A

TUBULAR MARKER DETAIL

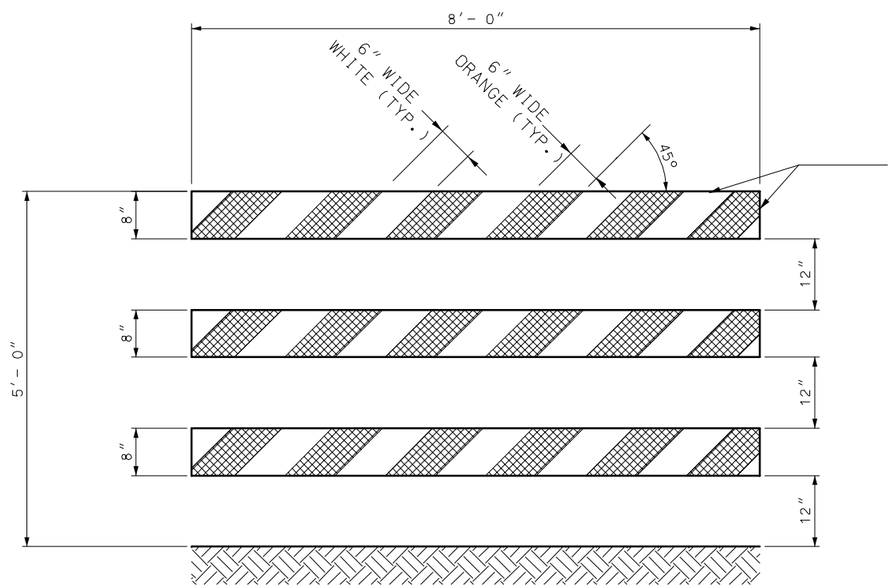

ONE TYPE III MOVABLE BARRICADE WILL BE REQUIRED TO COMPLETELY CLOSE EACH 8' OF TRAVELED WAY WIDTH.

NO SIGNS OR LIGHTING DEVICES SHALL BE MOUNTED OR ATTACHED TO TYPE III MOVABLE BARRICADES.

WHERE A BARRICADE ARRAY EXTENDS ACROSS A ROADWAY, THE STRIPES SHALL SLOPE DOWNWARD IN THE DIRECTION TOWARD WHICH TRAFFIC MUST TURN OR PASS.

WHERE BOTH RIGHT AND LEFT VEHICULAR MOVEMENTS ARE PROVIDED, THE STRIPES SHALL SLOPE DOWNWARD IN BOTH DIRECTIONS FROM THE CENTER OF THE BARRICADE ARRAY.

WHERE NO VEHICULAR MOVEMENTS ARE PROVIDED, THE STRIPES SHALL SLOPE DOWNWARD TOWARD THE CENTER OF THE BARRICADE ARRAY.

TYPE III MOVABLE BARRICADE

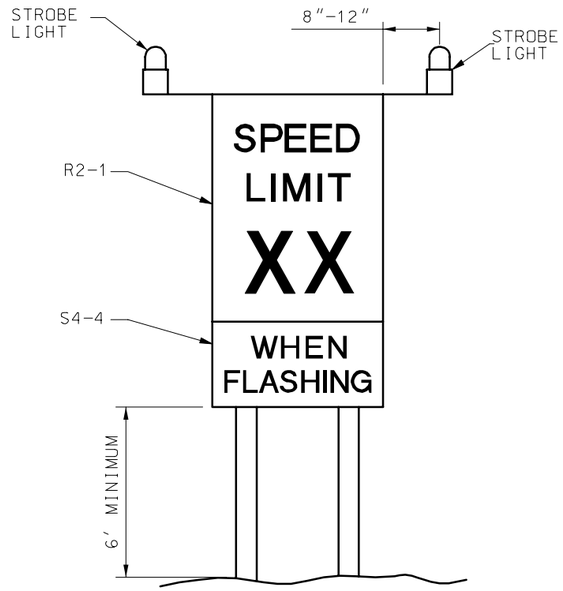

SEE NON-PORTABLE SIGN MOUNTING FOR LATERAL DIMENSIONS

SPEED LIMIT AND STROBE LIGHT ASSEMBLY

THE ASSEMBLY MAY BE EITHER POST- OR PORTABLE-MOUNTED.

THE ASSEMBLY SHALL ONLY BE USED AS SPECIFIED ON THE PLANS OR AS DIRECTED BY THE ENGINEER.

THE ASSEMBLY SHALL BE COVERED OR ROTATED SO THE SIGNS ARE NOT VISIBLE TO TRAFFIC WHEN WORK IS SUSPENDED OR THE CONDITION REQUIRING THE SPEED REDUCTION IS NOT PRESENT FOR 48 HOURS OR MORE.

THE STROBE LIGHTS SHALL BE TURNED OFF WHEN THE SPEED LIMIT IS NOT IN EFFECT.

STROBE LIGHT REQUIREMENTS

STROBE LIGHTS SHALL BE SHIELDED SO THEY WILL NOT BE DIRECTLY VISIBLE FROM THE REAR. NO DIRECT PAYMENT WILL BE MADE FOR THE BATTERIES REQUIRED TO POWER THE STROBE LIGHTS.

AT THE CONTRACTOR'S OPTION, THE STROBE LIGHTS MAY BE CONTROLLED BY A SWITCH LOCATED ON THE SIGN OR MAY BE A STANDARD TWO-CHANNEL DIGITAL TRANSMITTER AND RECEIVER UNIT. IF THE TRANSMITTER AND RECEIVER METHOD IS USED, ONE TRANSMITTER SHALL BE FURNISHED TO THE ENGINEER AT THE TIME OF INSTALLATION OF THE SPEED LIMIT ASSEMBLY. THE TRANSMITTER WILL BE RETURNED TO THE CONTRACTOR AT THE COMPLETION OF THE PROJECT. THE TRANSMITTER AND RECEIVERS WILL REMAIN THE PROPERTY OF THE CONTRACTOR AFTER THE PROJECT IS COMPLETED. NO DIRECT PAYMENT WILL BE MADE FOR THE COST OF THE TRANSMITTER AND RECEIVER.

PORTABLE WARNING LIGHTS

	TYPE A LOW INTENSITY	TYPE B HIGH INTENSITY	TYPE C STEADY BURN
LENS DIRECTIONAL FACES	1 OR 2	1	1 OR 2
FLASHING RATE PER MINUTE	55 TO 75	55 TO 75	CONSTANT
MINIMUM ON-TIME(1)	10%	8%	CONSTANT
HOURS OF OPERATION	DUSK TO DAWN	24 HRS/DAY	DUSK TO DAWN

TYPE A AND C LIGHTS SHALL BE VISIBLE ON A CLEAR NIGHT FROM A DISTANCE OF 3000 FEET(2).

TYPE B LIGHTS SHALL BE VISIBLE ON A SUNNY DAY WHEN VIEWED WITHOUT THE SUN DIRECTLY ON OR BEHIND THE DEVICE FROM A DISTANCE OF 1000 FEET(2).

(1) LENGTH OF TIME THAT INSTANTANEOUS INTENSITY IS EQUAL TO OR GREATER THAN EFFECTIVE INTENSITY.

(2) THIS VISIBILITY MUST BE MAINTAINED WITHIN A SOLID ANGLE 9° ON EACH SIDE OF THE VERTICAL AXIS, AND 5° ABOVE AND 5° BELOW THE HORIZONTAL AXIS.

PORTABLE WARNING LIGHTS SHALL BE BATTERY- OR SOLAR-POWERED.

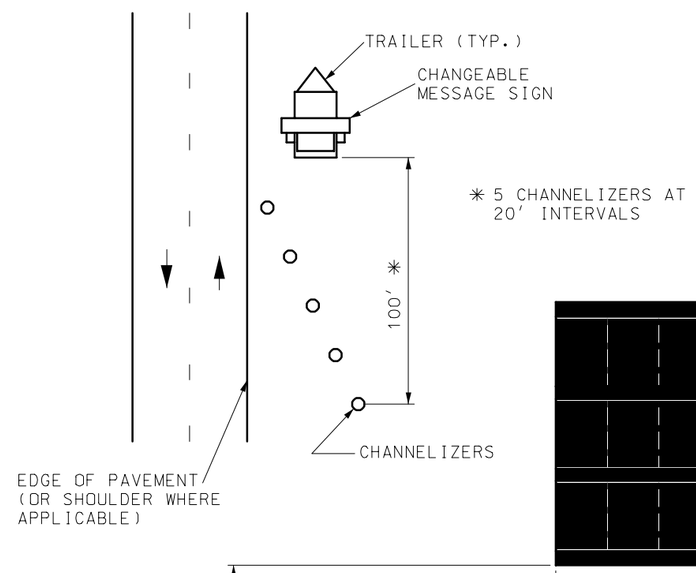

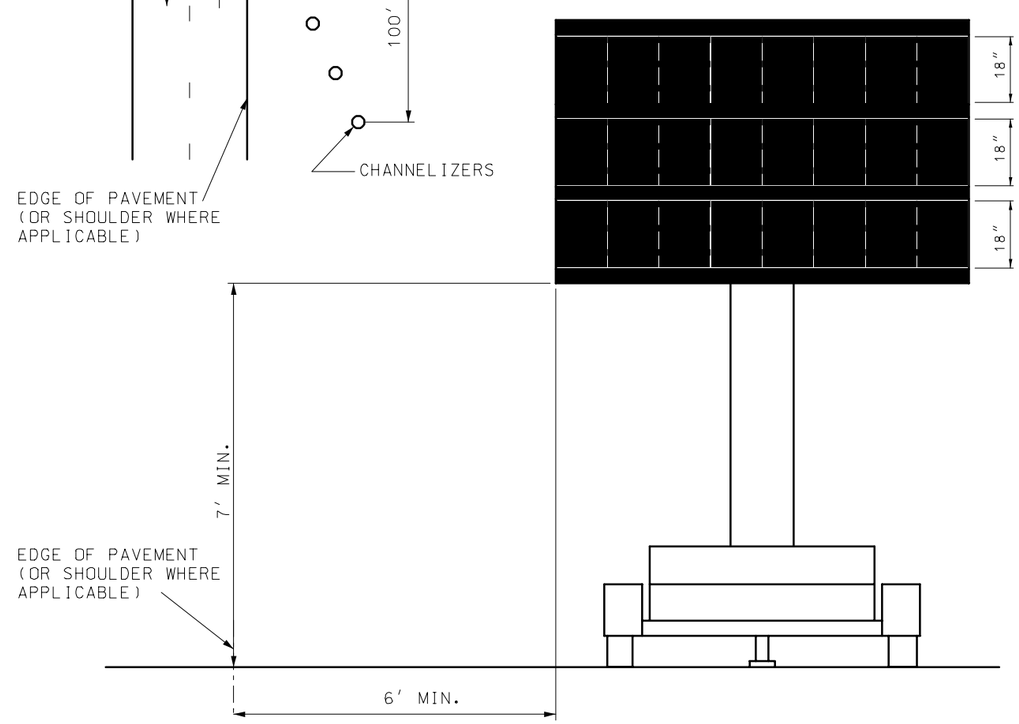

CHANGEABLE MESSAGE SIGN

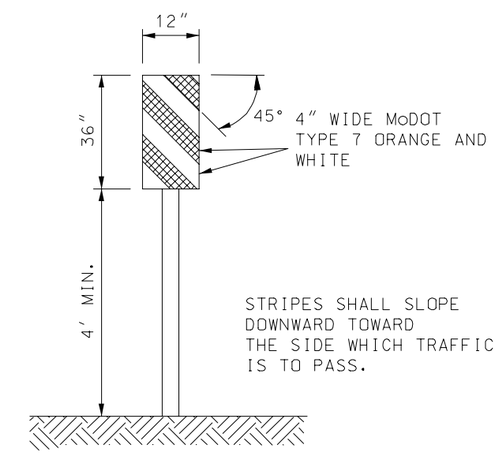

TYPE 3 OBJECT MARKERS

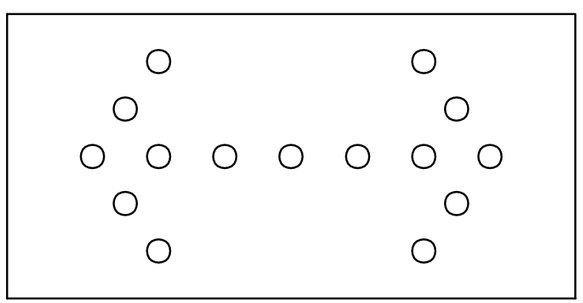

FLASHING ARROW PANEL REQUIREMENTS

PANEL MOUNTING HEIGHT SHALL BE AT LEAST 7 FEET FROM THE ROADWAY SURFACE TO THE LOWEST POINT ON THE PANEL. THE BOTTOM OF THE PANEL SHALL BE RELATIVELY LEVEL WHEN IN USE.

MISSOURI HIGHWAYS AND TRANSPORTATION COMMISSION

TEMPORARY TRAFFIC CONTROL DEVICES

DATE:_____ EFFECTIVE: 07-01-2004 616.10AE 4/8

LOCATION OF ACTIVITY (I.E. WORKERS, EQUIPMENT, MATERIAL) OR TYPE OF OPERATION	POSTED SPEED GREATER THAN 55 MPH		POSTED SPEED LESS THAN OR EQUAL TO 55 MPH	
	PROTECTED	UNPROTECTED	PROTECTED	UNPROTECTED
MULTILANE FACILITY				
BEYOND 30′ OF EOTP	POSTED	POSTED	POSTED	POSTED
10′ TO 30′ OF EOTP	POSTED	POSTED-10	POSTED	POSTED
WITHIN 10′ OF EOTP	POSTED	POSTED-10	POSTED	POSTED-10
IN TRAFFIC LANE	POSTED-10	POSTED-20 (MIN. 45 MPH)	POSTED-10	POSTED-10
HEAD-TO-HEAD	POSTED-10	POSTED-10	POSTED-10	POSTED-10
2-LANE / 2-WAY OPERATION				
BEYOND 30′ OF EOTP	POSTED	POSTED	POSTED	POSTED
10′ TO 30′ OF EOTP	POSTED	POSTED-10 (MIN. 55 MPH)	POSTED	POSTED
WITHIN 10′ OF EOTP	POSTED	POSTED-20 (MIN. 45 MPH)	POSTED	POSTED-10
1 LANE / 2 WAY OPERATION	35 MPH ✳			
TEMPORARY CLOSURE WITH FLAGGER	35 MPH ✳			

✳ CONDITIONS MAY ALLOW FOR SPEEDS GREATER THAN 35 MPH.

LEGEND:

"EOTP" = EDGE OF THROUGH PAVEMENT

"PROTECTED" INDICATES THAT ACTIVITY IS PHYSICALLY SHIELDED BY A CRASH-WORTHY DEVICE (TRAFFIC BARRIER, GUARDRAIL, IMPACT ATTENUATORS, ETC.).

"UNPROTECTED" INDICATES THAT ACTIVITY IS NOT SHIELDED BY A CRASH-WORTHY DEVICE. IT MAY ONLY BE DELINEATED BY CHANNELIZING DEVICES OR PAVEMENT MARKINGS.

"POSTED" INDICATES POSTED (EXISTING) SPEED PRIOR TO WORK ACTIVITY.

"POSTED-XX" INDICATES A REDUCTION IN THE SPEED LIMIT BY THE AMOUNT SHOWN IN MPH.

"MULTILANE FACILITY" OR "2-LANE/2-WAY OPERATION" INDICATES EXISTING GEOMETRICS PRIOR TO WORK ACTIVITY.

GENERAL NOTES:

REDUCED SPEEDS SHALL NOT BE BELOW 35 MPH EXCEPT WHEN LOCAL ORDINANCE PROVIDES FOR A LOWER SPEED, THE LOWER SPEED SHALL BE USED WHEN APPLICABLE.

ON DIVIDED HIGHWAYS, THE REDUCED SPEED IS APPLICABLE TO THE AFFECTED DIRECTION OF TRAVEL ONLY.

IF A SPEED REDUCTION IS USED, EXISTING SPEED LIMIT SIGNS WITHIN THE WORK ZONE SHALL BE COVERED OR REMOVED. SPEED LIMIT SIGNS INDICATING THE NORMAL SPEED LIMIT SHALL BE INSTALLED AT THE END OF THE WORK ZONE, PROVIDED NO FURTHER WORK ZONES WILL BE ENCOUNTERED WITHIN THE NEXT $\frac{1}{2}$ MILE.

IF THERE ARE GEOMETRICS IN THE WORK ZONE THAT REQUIRE A LOWER SPEED THAN THE SPEED INDICATED IN THE CHART (I.E. TEMPORARY BYPASSES, NARROW LANES, ETC.), APPROPRIATE WARNING SIGNS WITH ADVISORY SPEED PLAQUES SHALL BE USED TO ADVISE OF THIS SPECIALIZED SITUATION.

TEMPORARY SPEED LIMIT SIGNS AND REDUCED SPEED AHEAD SIGNS SHALL BE COVERED OR REMOVED WHEN THE CONDITIONS REQUIRING REDUCED SPEEDS DO NOT EXIST.

SPECIAL ACTIVITY WITHIN A WORK ZONE MAY REQUIRE A LOWER SPEED LIMIT THAN THE GENERAL WORK ZONE SPEED LIMIT. THE FURTHER REDUCED SPEED LIMIT SHALL BE EFFECTIVE ONLY FOR THE DURATION OF THAT ACTIVITY AND ONLY FOR THE SPECIFIC AREA OF THAT ACTIVITY.

FOR SPEED REDUCTIONS GREATER THAN 20 MPH, THE SPEED LIMIT SHOULD BE REDUCED IN 2 STAGES.

DEVIATIONS FROM THIS CHART SHALL BE DOCUMENTED.

WORK ZONE SPEED LIMIT

MISSOURI HIGHWAYS AND TRANSPORTATION COMMISSION

TEMPORARY
TRAFFIC CONTROL DEVICES
WORK ZONE SPEED LIMITS

DATE:_____ EFFECTIVE: 07-01-2004 616.10AE

WARNING SIGNS

SIGN	SIZE (IN.)	AREA (SQ. FT.)	COLOR SYM. LEG. BRD.	COLOR BACK GROUND	SHEETING	DESCRIPTION	
W01-1L	48X48	16.00	BK	OR	MoDOT FL. OR	TURN (SYMBOL LEFT ARROW)	
W01-1R	48X48	16.00	BK	OR	MoDOT FL. OR	TURN (SYMBOL RIGHT ARROW)	
W01-2L	48X48	16.00	BK	OR	MoDOT FL. OR	CURVE (SYMBOL LEFT ARROW)	
W01-2R	48X48	16.00	BK	OR	MoDOT FL. OR	CURVE (SYMBOL RIGHT ARROW)	
W01-3L	48X48	16.00	BK	OR	MoDOT FL. OR	REVERSE TURN (SYMBOL LEFT ARROW)	
W01-3R	48X48	16.00	BK	OR	MoDOT FL. OR	REVERSE TURN (SYMBOL RIGHT ARROW)	
W01-4L	48X48	16.00	BK	OR	MoDOT FL. OR	REVERSE CURVE (SYMBOL LEFT ARROW)	
W01-4R	48X48	16.00	BK	OR	MoDOT FL. OR	REVERSE CURVE (SYMBOL RIGHT ARROW)	
W01-4bL	48X48	16.00	BK	OR	MoDOT FL. OR	DOUBLE ARROW REVERSE CURVE (SYMBOL LEFT ARROWS)	(2)
W01-4bR	48X48	16.00	BK	OR	MoDOT FL. OR	DOUBLE ARROW REVERSE CURVE (SYMBOL RIGHT ARROWS)	(2)
W01-4cL	48X48	16.00	BK	OR	MoDOT FL. OR	TRIPLE ARROW REVERSE CURVE (SYMBOL LEFT ARROWS)	(2)
W01-4cR	48X48	16.00	BK	OR	MoDOT FL. OR	TRIPLE ARROW REVERSE CURVE (SYMBOL RIGHT ARROWS)	(2)
W01-6	48X24	8.00	BK	OR	MoDOT FL. OR	HORIZONTAL ARROW (SYMBOL)	
W01-6a	72X36	18.00	BK	OR	MoDOT FL. OR	HORIZONTAL ARROW (SYMBOL ON BARRICADE)	(1)
W01-7	48X24	8.00	BK	OR	MoDOT FL. OR	DOUBLE HEAD HORIZONTAL ARROW (SYMBOL)	
W01-7a	72X36	18.00	BK	OR	MoDOT FL. OR	DOUBLE HEAD HORIZONTAL ARROW (SYMBOL ON BARRICADE)	(1)
W01-8	18X24	3.00	BK	OR	MoDOT FL. OR	CHEVRON (SYMBOL)	
W01-8a	36X48	12.00	BK	OR	MoDOT FL. OR	CHEVRON (SYMBOL FOR DIVIDED HIGHWAYS)	
W03-1a	48X48	16.00	BK	OR	MoDOT FL. OR	STOP AHEAD (SYMBOL)	
W03-2a	48X48	16.00	BK	OR	MoDOT FL. OR	YIELD AHEAD (SYMBOL)	
W03-3	48X48	16.00	BK	OR	MoDOT FL. OR	SIGNAL AHEAD (SYMBOL)	
W03-4	48X48	16.00	BK	OR	MoDOT FL. OR	BE PREPARED TO STOP	
W04-1L	48X48	16.00	BK	OR	MoDOT FL. OR	MERGE (SYMBOL FROM LEFT)	
W04-1R	48X48	16.00	BK	OR	MoDOT FL. OR	MERGE (SYMBOL FROM RIGHT)	
W05-1	48X48	16.00	BK	OR	MoDOT FL. OR	ROAD/BRIDGE/RAMP NARROWS	(4)
W05-3	48X48	16.00	BK	OR	MoDOT FL. OR	ONE LANE BRIDGE	
W05-5	48X48	16.00	BK	OR	MoDOT FL. OR	NARROW LANES	(3)
W06-1	48X48	16.00	BK	OR	MoDOT FL. OR	DIVIDED HIGHWAY (SYMBOL)	
W06-2	48X48	16.00	BK	OR	MoDOT FL. OR	DIVIDED HIGHWAY END (SYMBOL)	
W06-3	48X48	16.00	BK	OR	MoDOT FL. OR	TWO WAY TRAFFIC (SYMBOL)	
W07-3a	24X18	3.00	BK	OR	MoDOT FL. OR	NEXT XX MILES (PLAQUE)	
W08-1	48X48	16.00	BK	OR	MoDOT FL. OR	BUMP	
W08-2	48X48	16.00	BK	OR	MoDOT FL. OR	DIP	
W08-3	48X48	16.00	BK	OR	MoDOT FL. OR	PAVEMENT ENDS	
W08-4	48X48	16.00	BK	OR	MoDOT FL. OR	SOFT SHOULDER	
W08-5	48X48	16.00	BK	OR	MoDOT FL. OR	SLIPPERY WHEN WET (SYMBOL)	
W08-6	48X48	16.00	BK	OR	MoDOT FL. OR	TRUCK CROSSING	
W08-6c	48X48	16.00	BK	OR	MoDOT FL. OR	TRUCK ENTRANCE	(3)
W08-7	36X36	9.00	BK	OR	MoDOT FL. OR	LOOSE GRAVEL	
W08-9	48X48	16.00	BK	OR	MoDOT FL. OR	LOW SHOULDER	
W08-9a	48X48	16.00	BK	OR	MoDOT FL. OR	SHOULDER DROP-OFF	
W08-11	48X48	16.00	BK	OR	MoDOT FL. OR	UNEVEN LANES	
W08-12	36X36	9.00	BK	OR	MoDOT FL. OR	NO CENTER STRIPE	
W10-1	42 RND.	9.62	BK	YL	MoDOT TYPE 3	RAILROAD CROSSING	
W012-1	24X24	4.00	BK	OR	MoDOT FL. OR	DOUBLE DOWN ARROW (SYMBOL)	
W012-2	48X48	16.00	BK	OR	MoDOT FL. OR	LOW CLEARANCE (SYMBOL)	
W012-2x	24X18	3.00	BK	OR	MoDOT FL. OR	LOW CLEARANCE (PLAQUE)	(3)
W012-3a,b	144X24	24.00	BK	OR	MoDOT FL. OR	OVERHEAD LOW CLEARANCE (FEET AND INCHES)	(3)
SPECIAL	120X60	50.00	BK	OR	MoDOT FL. OR	LOW CLEARANCE XX FT XX IN XX MILES AHEAD	(3)
SPECIAL	120X60	50.00	BK	OR	MoDOT FL. OR	WIDTH RESTRICTION XX FT XX IN XX MILES AHEAD	(3)
W013-1	24X24	4.00	BK	OR	MoDOT FL. OR	ADVISORY SPEED (PLAQUE)	
W016-2a	24X18	3.00	BK	OR	MoDOT FL. OR	500 FEET/1000 FEET (PLAQUE)	
W020-1	48X48	16.00	BK	OR	MoDOT FL. OR	ROAD/BRIDGE/RAMP WORK AHEAD	(4)
W020-2	48X48	16.00	BK	OR	MoDOT FL. OR	DETOUR AHEAD	
W020-3	48X48	16.00	BK	OR	MoDOT FL. OR	ROAD CLOSED AHEAD	
W020-4	48X48	16.00	BK	OR	MoDOT FL. OR	ONE LANE ROAD AHEAD	
W020-5	48X48	16.00	BK	OR	MoDOT FL. OR	RIGHT/CENTER/LEFT LANE CLOSED AHEAD	(4)
W020-5a	48X48	16.00	BK	OR	MoDOT FL. OR	RIGHT/CENTER/LEFT TWO LANES CLOSED AHEAD	(4)

(1) SIGN DEPICTION, ARROW, BORDERS AND SPACING SHALL BE IN ACCORDANCE WITH THE LATEST EDITION OF "STANDARD HIGHWAY SIGNS" BY THE U.S. DEPARTMENT OF TRANSPORTATION - FHWA.

(2) REFER TO THE LATEST EDITION OF MUTCD PART VI BY THE U.S. DEPARTMENT OF TRANSPORTATION - FHWA FOR SIGN DEPICTION. ARROW, BORDERS AND SPACING SHALL CONFORM TO THE GUIDELINES SET FORTH IN THE LATEST EDITION OF "STANDARD HIGHWAY SIGNS" BY THE U.S. DEPARTMENT OF TRANSPORTATION - FHWA.

(3) ARROW, BORDERS AND SPACING SHALL BE IN ACCORDANCE WITH THE LATEST EDITION OF "STANDARD HIGHWAY SIGNS" BY THE U.S. DEPARTMENT OF TRANSPORTATION - FHWA.

(4) USE OF A SUPPLEMENTAL PLATE FOR LINE 1 IS ACCEPTABLE.

(5) PLAQUE AND APPLICABLE REGULATORY SIGN MAY BE MANUFACTURED AS ONE SIGN.

GENERAL NOTES:

SIGN LAYOUTS SHALL BE IN ACCORDANCE WITH THE LATEST EDITION OF "STANDARD HIGHWAY SIGNS" BY THE U.S. DEPARTMENT OF TRANSPORTATION - FHWA, UNLESS SPECIFIED OTHERWISE.

SIGN DIMENSIONS SHOWN ARE MINIMUM. NO ADDITIONAL PAYMENT WILL BE MADE IF CONTRACTORS USE LARGER SIGNS.

NO ADDITIONAL PAYMENT WILL BE MADE FOR PLATES.

ALL PLAQUES SHALL HAVE A BORDER. PLATES SHALL NOT HAVE A BORDER.

MISSOURI HIGHWAYS AND TRANSPORTATION COMMISSION

TEMPORARY TRAFFIC CONTROL DEVICES
WARNING SIGNS

DATE:_____ EFFECTIVE: 07-01-2004 **616.10AE** 6/8

SIGN	SIZE (IN.)	AREA (SQ. FT.)	COLOR SYM. LEG. BRD.	COLOR BACK GROUND	SHEETING	DESCRIPTION	
WARNING SIGNS							
W020-6a	48X48	16.00	BK	OR	MoDOT FL. OR	RIGHT/CENTER/LEFT LANE CLOSED	(3)(4)
W020-7a	48X48	16.00	BK	OR	MoDOT FL. OR	FLAGGER (SYMBOL)	
W021-2	48X48	16.00	BK	OR	MoDOT FL. OR	FRESH OIL	
W021-5b	48X48	16.00	BK	OR	MoDOT FL. OR	SHOULDER WORK AHEAD	(3)
W022-1	48X48	16.00	BK	OR	MoDOT FL. OR	BLASTING ZONE AHEAD	
W022-2	42X36	10.50	BK	OR	MoDOT FL. OR	TURN OFF 2-WAY RADIO AND PHONE	
W022-3	42X36	10.50	BK	OR	MoDOT FL. OR	END BLASTING ZONE	
W022-6e	21X15	2.19	BK	OR	MoDOT FL. OR	WET PAINT (ARROW PIVOTS)	(3)
GUIDE SIGNS							
E05-1	60X48	20.00	BK	OR	MoDOT FL. OR	GORE EXIT	(3)
G020-1	60X24	10.00	BK	OR	MoDOT FL. OR	ROAD WORK NEXT XX MILES	
G020-2	48X24	8.00	BK	OR	MoDOT FL. OR	END ROAD WORK	
G020-4	36X18	4.50	BK	OR	MoDOT FL. OR	PILOT CAR FOLLOW ME	
G023-1	36X12	3.00	BK	OR	MoDOT FL. OR	WORK ZONE (PLAQUE)	(3) (5)
M04-1	24X12	2.00	BK	OR	MoDOT FL. OR	ALTERNATE (PLAQUE)	
M04-8	24X12	2.00	BK	OR	MoDOT FL. OR	DETOUR (PLAQUE)	
M04-8a	24X18	3.00	BK	OR	MoDOT FL. OR	END DETOUR	
M04-9L	48X36	12.00	BK	OR	MoDOT FL. OR	DETOUR (LEFT ARROW)	
M04-9R	48X36	12.00	BK	OR	MoDOT FL. OR	DETOUR (RIGHT ARROW)	
M04-10L	48X18	6.00	BK	OR	MoDOT FL. OR	DETOUR (ARROW LEFT)	
M04-10R	48X18	6.00	BK	OR	MoDOT FL. OR	DETOUR (ARROW RIGHT)	
M5-1	21X15	2.19	BK	WH	MoDOT TYPE 3	ADVANCE LEFT TURN ARROW	
M5-1R	21X15	2.19	BK	WH	MoDOT TYPE 3	ADVANCE RIGHT TURN ARROW	
M6-1	21X15	2.19	BK	WH	MoDOT TYPE 3	TURN ARROW	
M6-3	21X15	2.19	BK	WH	MoDOT TYPE 3	STRAIGHT ARROW	
REGULATORY SIGNS							
R1-1	48X48	13.25	WH	RD	MoDOT TYPE 3	STOP	
R1-2	48 TRI.	6.93	RD	WH	MoDOT TYPE 3	YIELD	
R1-2a	36X36	9.00	BK	WH	MoDOT TYPE 3	TO ONCOMING TRAFFIC (PLAQUE)	
R1-3	20X9	1.25	WH	RD	MoDOT TYPE 3	4/3-WAY (PLAQUE)	
R2-1	36X48	12.00	BK	WH	MoDOT TYPE 3	SPEED LIMIT XX	
R2-5a	36X48	12.00	BK	WH	MoDOT TYPE 3	REDUCED SPEED AHEAD	
R3-1	48X48	16.00	BK/RD	WH	MoDOT TYPE 3	NO RIGHT TURN (SYMBOL)	
R3-2	48X48	16.00	BK/RD	WH	MoDOT TYPE 3	NO LEFT TURN (SYMBOL)	
R3-3	36X36	9.00	BK	WH	MoDOT TYPE 3	NO TURNS	
R3-4	48X48	16.00	BK/RD	WH	MoDOT TYPE 3	NO U-TURN (SYMBOL)	
R3-7L	30X30	6.25	BK	WH	MoDOT TYPE 3	LEFT LANE MUST TURN LEFT	
R3-7R	30X30	6.25	BK	WH	MoDOT TYPE 3	RIGHT LANE MUST TURN RIGHT	
R4-1	36X48	12.00	BK	WH	MoDOT TYPE 3	DO NOT PASS	
R4-2	36X48	12.00	BK	WH	MoDOT TYPE 3	PASS WITH CARE	
R4-7a	36X48	12.00	BK	WH	MoDOT TYPE 3	KEEP RIGHT (HORIZONTAL ARROW)	
R4-8a	36X48	12.00	BK	WH	MoDOT TYPE 3	KEEP LEFT (HORIZONTAL ARROW)	
R5-1	30X30	6.25	RD	WH	MoDOT TYPE 3	DO NOT ENTER	
R5-1a	36X24	6.00	WH	RD	MoDOT TYPE 3	WRONG WAY	
R6-1L	48X18	6.00	BK	WH	MoDOT TYPE 3	ONE WAY ARROW (LEFT)	
R6-1R	48X18	6.00	BK	WH	MoDOT TYPE 3	ONE WAY ARROW (RIGHT)	
R6-2L	24X30	5.00	BK	WH	MoDOT TYPE 3	ONE WAY (LEFT)	
R6-2R	24X30	5.00	BK	WH	MoDOT TYPE 3	ONE WAY (RIGHT)	
R10-6	24X36	6.00	BK	WH	MoDOT TYPE 3	STOP HERE ON RED (45° ARROW)	
R11-2	48X30	10.00	BK	WH	MoDOT TYPE 3	ROAD CLOSED	
R11-3a	60X30	12.50	BK	WH	MoDOT TYPE 3	ROAD CLOSED XX MILES AHEAD LOCAL TRAFFIC ONLY	
R11-4	60X30	12.50	BK	WH	MoDOT TYPE 3	ROAD CLOSED TO THRU TRAFFIC	
CONST-3A	60X48	20.00	BK	WH	MoDOT TYPE 3	FINE SIGN	(3)
CONST-3X	57X9	---	BK	WH	MoDOT TYPE 3	SPEEDING/PASSING (PLATE)	(3)

(1) SIGN DEPICTION, ARROW, BORDERS AND SPACING SHALL BE IN ACCORDANCE WITH THE LATEST EDITION OF "STANDARD HIGHWAY SIGNS" BY THE U.S. DEPARTMENT OF TRANSPORTATION - FHWA.

(2) REFER TO THE LATEST EDITION OF MUTCD PART VI BY THE U.S. DEPARTMENT OF TRANSPORTATION - FHWA FOR SIGN DEPICTION. ARROW, BORDERS AND SPACING SHALL CONFORM TO THE GUIDELINES SET FORTH IN THE LATEST EDITION OF "STANDARD HIGHWAY SIGNS" BY THE U.S. DEPARTMENT OF TRANSPORTATION - FHWA.

(3) ARROW, BORDERS AND SPACING SHALL BE IN ACCORDANCE WITH THE LATEST EDITION OF "STANDARD HIGHWAY SIGNS" BY THE U.S. DEPARTMENT OF TRANSPORTATION - FHWA.

(4) USE OF A SUPPLEMENTAL PLATE FOR LINE 1 IS ACCEPTABLE.

(5) PLAQUE AND APPLICABLE REGULATORY SIGN MAY BE MANUFACTURED AS ONE SIGN.

GENERAL NOTES:

SIGN LAYOUTS SHALL BE IN ACCORDANCE WITH THE LATEST EDITION OF "STANDARD HIGHWAY SIGNS" BY THE U.S. DEPARTMENT OF TRANSPORTATION - FHWA, UNLESS SPECIFIED OTHERWISE.

SIGN DIMENSIONS SHOWN ARE MINIMUM. NO ADDITIONAL PAYMENT WILL BE MADE IF CONTRACTORS USE LARGER SIGNS.

NO ADDITIONAL PAYMENT WILL BE MADE FOR PLATES.

ALL PLAQUES SHALL HAVE A BORDER. PLATES SHALL NOT HAVE A BORDER.

MISSOURI HIGHWAYS AND TRANSPORTATION COMMISSION

TEMPORARY TRAFFIC CONTROL DEVICES
WARNING, GUIDE AND REGULATORY SIGNS

DATE:_____ EFFECTIVE: 07-01-2004 **616.10AE** 7/8

W05-5 (3)

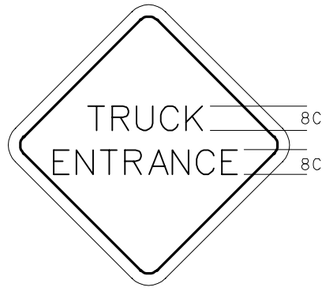

W08-6c (3)

W012-2x (3)

(1) SIGN DEPICTION, ARROW, BORDERS AND SPACING SHALL BE IN ACCORDANCE WITH THE LATEST EDITION OF "STANDARD HIGHWAY SIGNS" BY THE U.S. DEPARTMENT OF TRANSPORTATION - FHWA.

(2) REFER TO THE LATEST EDITION OF MUTCD PART VI BY THE U.S. DEPARTMENT OF TRANSPORTATION - FHWA FOR SIGN DEPICTION. ARROW, BORDERS AND SPACING SHALL CONFORM TO THE GUIDELINES SET FORTH IN THE LATEST EDITION OF "STANDARD HIGHWAY SIGNS" BY THE U.S. DEPARTMENT OF TRANSPORTATION - FHWA.

(3) ARROW, BORDERS AND SPACING SHALL BE IN ACCORDANCE WITH THE LATEST EDITION OF "STANDARD HIGHWAY SIGNS" BY THE U.S. DEPARTMENT OF TRANSPORTATION - FHWA.

(4) USE OF A SUPPLEMENTAL PLATE FOR LINE 1 IS ACCEPTABLE.

(5) PLAQUE AND APPLICABLE REGULATORY SIGN MAY BE MANUFACTURED AS ONE SIGN.

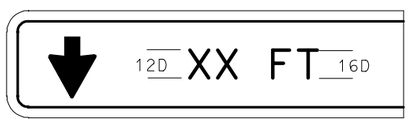

W012-3a (3)

W012-3b (3)

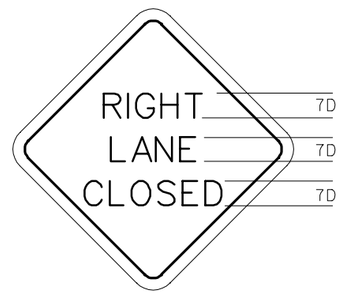

W020-6a (3)(4)

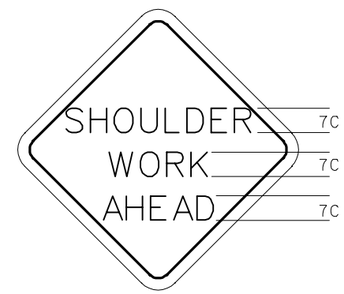

W021-5b (3)

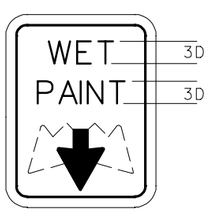

W022-6e (3)

G023-1 (3)

CONST-3A (3)

GENERAL NOTES:

SIGN LAYOUTS SHALL BE IN ACCORDANCE WITH THE LATEST EDITION OF "STANDARD HIGHWAY SIGNS" BY THE U.S. DEPARTMENT OF TRANSPORTATION - FHWA UNLESS SPECIFIED OTHERWISE.

SIGN DIMENSIONS SHOWN ARE MINIMUM. NO ADDITIONAL PAYMENT WILL BE MADE IF CONTRACTORS USE LARGER SIGNS.

NO ADDITIONAL PAYMENT WILL BE MADE FOR PLATES.

ALL PLAQUES SHALL HAVE A BORDER. PLATES SHALL NOT HAVE A BORDER.

LETTER DIMENSIONS SHALL BE AS SHOWN.

SPECIAL (3)

SPECIAL (3)

CONST-3X (3)

MISSOURI HIGHWAYS AND TRANSPORTATION COMMISSION

TRAFFIC CONTROL DEVICES

DATE:_____ EFFECTIVE: 07-01-2004 **616.10AE** 8/8