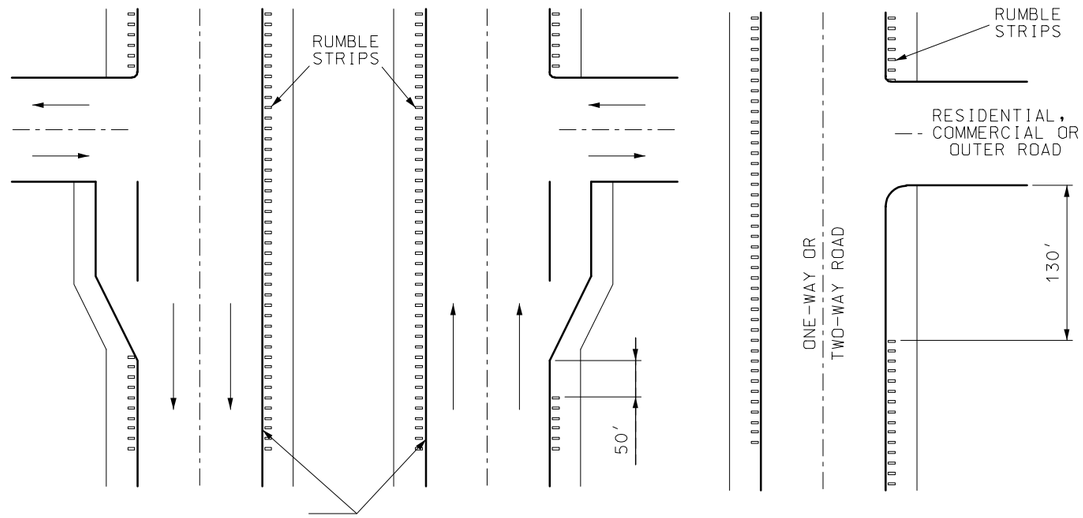

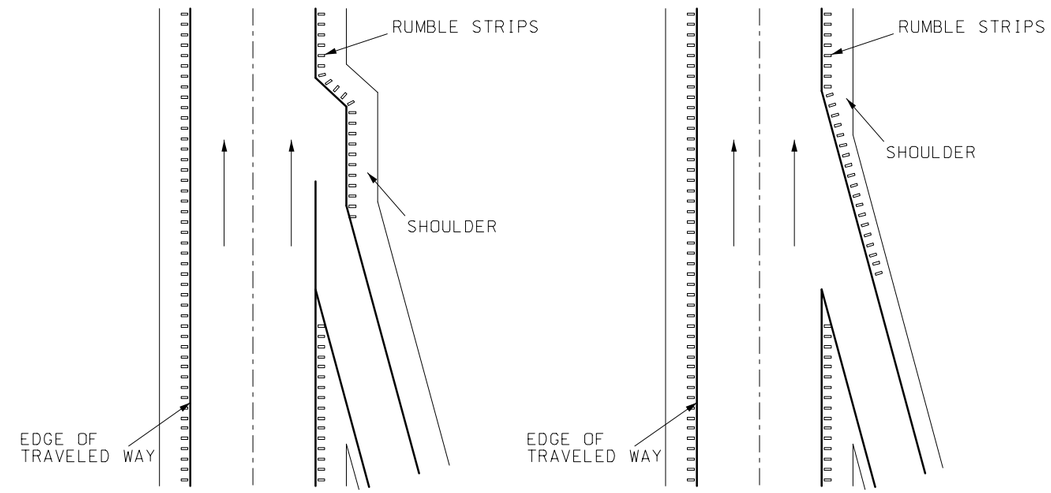

ACCELERATION OR DECELERATION LANE
ACCELERATION LANE SHOWN

RUMBLE STRIP LAYOUTS

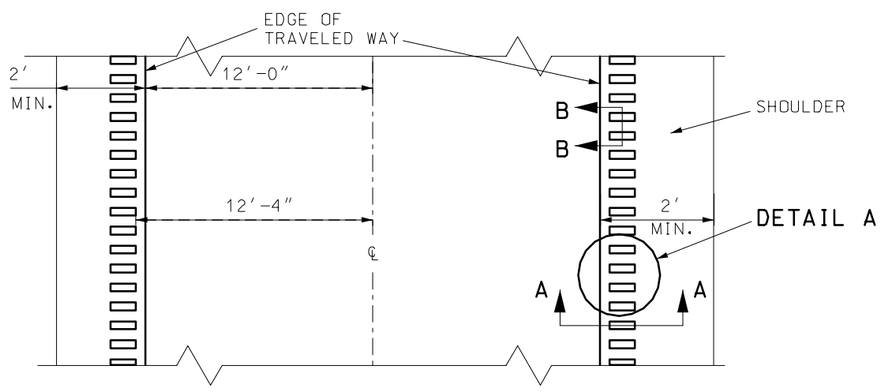

ROADWAY PLAN
FOR TWO-WAY ROAD, FREEWAY OR EXPRESSWAY

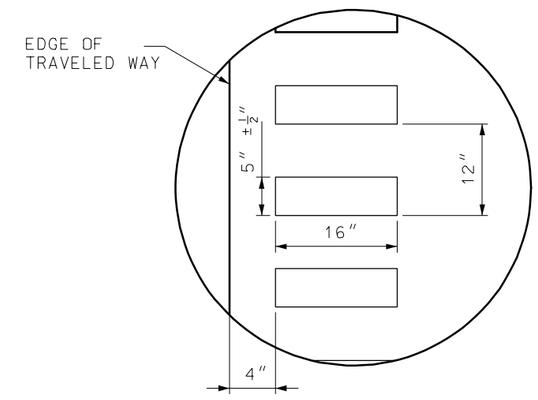

DETAIL A

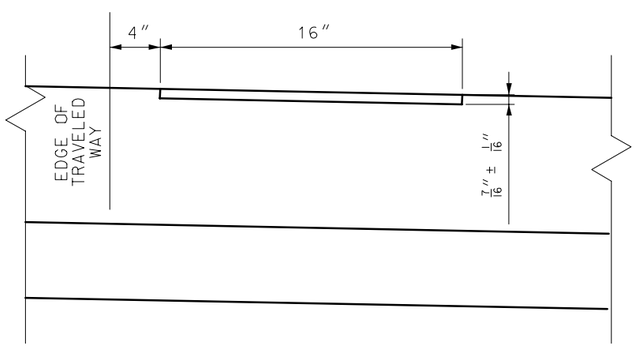

SECTION A–A

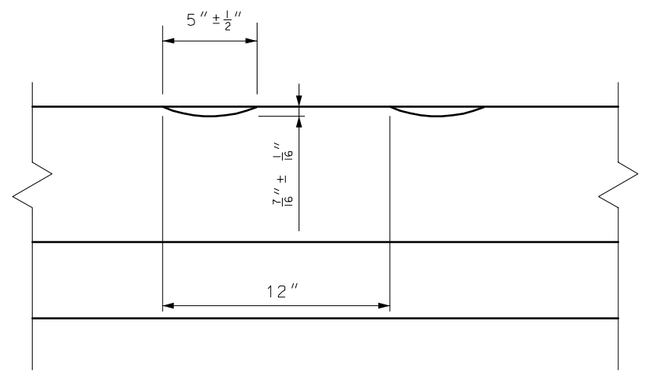

SECTION B–B

GENERAL NOTES:

RUMBLE STRIPS SHALL BE PLACED ON THE INSIDE SHOULDERS OF FREEWAYS OR EXPRESSWAYS IF THE SHOULDERS ARE 2′ OR WIDER.

ALL RUMBLE STRIPS SHALL BE MILLED.

MISSOURI HIGHWAYS AND TRANSPORTATION COMMISSION

RUMBLE STRIPS
SHOULDER

DATE:_____ | EFFECTIVE: 07-01-2004 | **626.00C** | 1/1