Span (S) = 4 ft
HT (ft) = 4 or 5

	DESIGN FILL	MEMBER THICKNESSES			TOP SLAB BARS				BOTTOM SLAB BARS				WALL BARS					COEFFICIENTS (see note)				"C" Multiplier	"K" Multiplier	
		TS	BS	TX	A1 Bars		J3 Bars		A2 Bars		J4 Bars		B2 Bars		F Bars		J4		J3			S = 4 ft	HT = 4 ft	HT = 5 ft
	(ft-in)	Thick	Thick.	Thick	Size	c to c	Size	c to c	Size	c to c	Size	c to c	G1	Size	c to c	Size	c to c	K3	C4	K2	C1	in	in	in
HS20	0'-9"	11	8	8	4	7.5	4	11.0	4	7.0	4	11.5	12	5	11.5	4	14.0	0.87	0.53	0.46	0.70	56	62	74
	2'-7"	8	8	8	4	11.5	4	11.5	4	9.0	4	11.5	12	5	11.5	4	14.0	0.91	0.50	0.44	0.56	56	59	71
	4'-3"	8	8	8	4	11.5	4	11.5	4	11.5	4	11.5	0	5	11.5	4	14.0	0.91	0.49	0.44	0.52	56	59	71
	5'-11"	8	8	8	4	11.5	4	11.5	4	11.5	4	11.5	0	5	11.5	4	14.0	0.91	0.48	0.44	0.49	56	59	71
	7'-6"	8	8	8	4	11.5	4	11.5	4	11.5	4	11.5	0	5	11.5	4	14.0	0.91	0.47	0.44	0.48	56	59	71
HS20 MOD	0'-8"	12	9	8	4	6.0	4	9.5	4	6.0	4	11.5	12	5	11.5	4	14.0	0.87	0.54	0.46	0.70	56	64	76
	2'-7"	8	8	8	4	10.5	4	11.5	4	7.5	4	11.5	12	5	11.5	4	14.0	0.91	0.50	0.44	0.56	56	59	71
	4'-3"	8	8	8	4	11.5	4	11.5	4	11.5	4	11.5	0	5	11.5	4	14.0	0.91	0.49	0.44	0.52	56	59	71
	5'-11"	8	8	8	4	11.5	4	11.5	4	11.5	4	11.5	0	5	11.5	4	14.0	0.91	0.48	0.44	0.49	56	59	71
	7'-6"	8	8	8	4	11.5	4	11.5	4	11.5	4	11.5	0	5	11.5	4	14.0	0.91	0.47	0.44	0.48	56	59	71
HS20 or HS20 MOD	9'-2"	8	8	8	4	11.5	4	11.5	4	11.5	4	11.5	0	5	11.5	4	14.0	0.91	0.46	0.44	0.47	56	59	71
	10'-10"	8	8	8	4	11.5	4	11.5	4	11.5	4	11.5	0	5	11.5	4	14.0	0.91	0.46	0.44	0.47	56	59	71
	12'-5"	8	8	8	4	11.5	4	11.5	4	11.5	4	11.5	0	5	11.5	4	14.0	0.91	0.45	0.44	0.46	56	59	71
	14'-1"	8	8	8	4	11.5	4	11.5	4	11.5	4	11.5	0	5	11.5	4	14.0	0.91	0.45	0.44	0.46	56	59	71
	15'-9"	8	8	8	4	11.5	4	11.5	4	10.5	4	11.5	0	5	11.5	4	14.0	0.91	0.45	0.44	0.45	56	59	71
	17'-5"	8	8	8	4	11.5	4	11.5	4	9.5	4	11.5	0	5	11.5	4	14.0	0.91	0.45	0.44	0.45	56	59	71
	19'-0"	8	8	8	4	11.5	4	11.5	4	9.0	4	11.5	0	5	11.5	4	14.0	0.91	0.45	0.44	0.45	56	59	71
	20'-8"	8	9	8	4	11.0	4	11.5	4	8.0	4	11.5	0	5	11.5	4	14.0	0.91	0.45	0.44	0.45	56	60	72
	22'-4"	8	9	8	4	10.5	4	11.5	4	8.5	4	11.5	0	5	11.5	4	14.0	0.91	0.44	0.43	0.45	56	60	72
	23'-11"	8	9	8	4	9.5	4	11.5	4	8.0	4	11.5	0	5	11.5	4	14.0	0.91	0.44	0.43	0.45	56	60	72
	25'-7"	8	9	8	4	9.0	4	11.0	4	7.5	4	11.5	0	5	11.5	4	14.0	0.91	0.44	0.43	0.45	56	60	72
	27'-3"	8	9	8	4	8.5	4	10.5	4	7.0	4	10.5	0	5	11.5	4	14.0	0.91	0.44	0.43	0.45	56	60	72
	28'-10"	8	10	8	4	8.0	4	9.5	4	6.5	4	11.0	0	5	11.5	4	14.0	0.91	0.44	0.43	0.45	56	61	73
	30'-6"	8	10	8	4	7.5	4	9.0	4	7.0	4	10.5	0	5	11.5	4	14.0	0.91	0.44	0.42	0.45	56	61	73
	32'-2"	8	10	8	4	7.0	4	9.0	4	6.5	4	9.5	0	5	11.5	4	14.0	0.91	0.44	0.42	0.45	56	61	73

SPAN (S) = 4 ft
HT (ft) = 6 or 7

	DESIGN FILL	MEMBER THICKNESSES			TOP SLAB BARS				BOTTOM SLAB BARS				WALL BARS					COEFFICIENTS (see note)				"C" Multiplier	"K" Multiplier	
		TS	BS	TX	A1 Bars		J3 Bars		A2 Bars		J4 Bars		B2 Bars		F Bars		J4		J3			S = 4 ft	HT = 6 ft	HT = 7 ft
	(ft-in)	Thick	Thick.	Thick	Size	c to c	Size	c to c	Size	c to c	Size	c to c	G1	Size	c to c	Size	c to c	K3	C4	K2	C1	in	in	in
HS20	0'-9"	11	8	8	4	7.0	4	11.0	4	6.0	4	11.5	12	5	11.5	4	14.0	0.90	0.73	0.34	0.70	56	86	98
	2'-7"	8	8	8	4	11.5	4	11.5	4	8.5	4	11.5	12	5	11.5	4	14.0	0.93	0.73	0.31	0.70	56	83	95
	4'-3"	8	8	8	4	11.5	4	11.5	4	11.5	4	11.5	0	5	11.5	4	14.0	0.93	0.73	0.31	0.72	56	83	95
	5'-11"	8	8	8	4	11.5	4	11.5	4	11.5	4	11.5	0	5	11.5	4	14.0	0.93	0.73	0.31	0.70	56	83	95
	7'-6"	8	8	8	4	11.5	4	11.5	4	11.5	4	11.5	0	5	11.5	4	14.0	0.93	0.72	0.31	0.70	56	83	95
HS20 MOD	0'-9"	11	9	8	5	9.0	4	11.0	5	8.5	4	11.5	12	5	11.5	4	14.0	0.90	0.73	0.33	0.70	56	87	99
	2'-7"	8	8	8	4	10.0	4	11.5	4	7.0	4	11.5	12	5	11.5	4	14.0	0.93	0.73	0.31	0.70	56	83	95
	4'-3"	8	8	8	4	11.5	4	11.5	4	11.5	4	11.5	0	5	11.5	4	14.0	0.93	0.73	0.31	0.72	56	83	95
	5'-11"	8	8	8	4	11.5	4	11.5	4	11.5	4	11.5	0	5	11.5	4	14.0	0.93	0.73	0.31	0.70	56	83	95
	7'-6"	8	8	8	4	11.5	4	11.5	4	11.5	4	11.5	0	5	11.5	4	14.0	0.93	0.72	0.31	0.70	56	83	95
HS20 or HS20 MOD	9'-2"	8	8	8	4	11.5	4	11.5	4	11.5	4	11.5	0	5	11.5	4	14.0	0.93	0.67	0.31	0.70	56	83	95
	10'-10"	8	8	8	4	11.5	4	11.5	4	11.5	4	10.5	0	5	11.5	4	14.0	0.93	0.65	0.31	0.70	56	83	95
	12'-5"	8	8	8	4	11.5	4	11.5	4	11.5	4	9.0	0	5	11.5	4	14.0	0.93	0.64	0.31	0.75	56	83	95
	14'-1"	8	8	8	4	11.5	4	11.5	4	11.5	4	8.5	0	5	11.5	4	14.0	0.93	0.63	0.31	0.70	56	83	95
	15'-9"	8	8	8	4	11.5	4	11.0	4	11.0	4	7.5	0	5	11.5	4	14.0	0.93	0.62	0.31	0.66	56	83	95
	17'-5"	8	8	8	4	11.5	4	9.5	4	10.0	4	7.0	0	5	11.5	4	14.0	0.93	0.61	0.31	0.65	56	83	95
	19'-0"	8	8	8	4	11.5	4	9.0	4	9.0	4	7.0	0	5	11.5	4	14.0	0.93	0.61	0.31	0.64	56	83	95
	20'-8"	8	9	8	4	11.5	4	9.0	4	9.5	4	7.0	0	5	11.5	4	14.0	0.93	0.64	0.31	0.63	56	84	96
	22'-4"	8	9	9	4	11.5	4	10.5	4	9.0	4	7.5	0	5	11.5	4	14.0	0.93	0.59	0.31	0.58	57	84	96
	23'-11"	8	9	9	4	10.5	4	9.0	4	8.5	4	7.0	0	5	11.5	4	14.0	0.93	0.59	0.31	0.58	57	84	96
	25'-7"	8	9	9	4	10.0	4	9.0	4	8.0	4	7.0	0	5	11.5	4	14.0	0.93	0.59	0.31	0.57	57	84	96
	27'-3"	8	10	9	4	9.0	4	8.5	4	7.5	4	7.0	0	5	11.5	4	14.0	0.93	0.62	0.31	0.57	57	85	97
	28'-10"	8	10	10	4	9.0	4	9.0	4	8.0	4	7.5	0	5	11.5	4	14.0	0.93	0.57	0.30	0.55	58	85	97
	30'-6"	8	10	10	4	8.5	4	8.5	4	7.5	4	7.0	0	5	11.5	4	14.0	0.93	0.57	0.30	0.55	58	85	97
	32'-2"	8	10	10	4	8.0	4	8.0	4	7.0	4	7.0	0	5	11.5	4	14.0	0.93	0.57	0.30	0.54	58	85	97

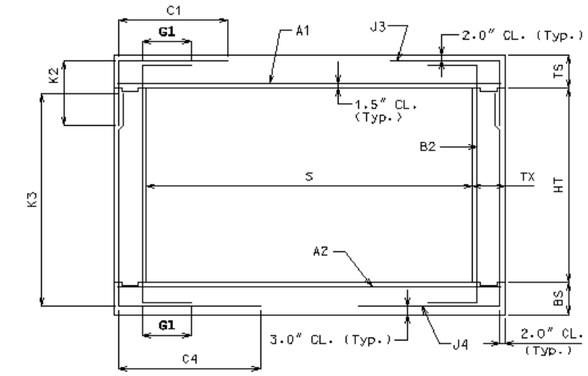

SECTION THRU BOX

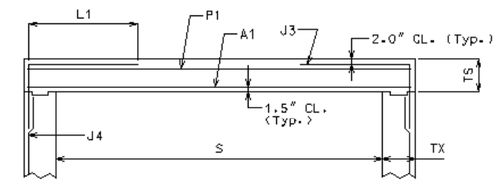

PART SECTION THRU BOX FOR MODIFIED J3 ALTERNATIVE
(B2 BAR NOT SHOWN FOR CLARITY)

NOTE: IF DESIGN FILL FALLS BETWEEN TABULATED FILLS, USE THE ADJACENT TABULATED FILL WHICH YIELDS THE GREATER MEMBER THICKNESS. IF THE MEMBER THICKNESSES ARE EQUAL, USE THE ADJACENT TABULATED FILL WHICH YIELDS THE GREATER AREA OF REINFORCEMENT.

SPECIAL DESIGNS ARE REQUIRED WHEN THE DESIGN FILL IS OUTSIDE THE RANGE OF TABULATED FILLS.

ALL DIMENSIONS ARE IN inch UNLESS OTHERWISE SPECIFIED.

COEFFICIENTS: DIMENSIONS MARKED WITH C# OR K# ARE THE PRODUCT OF THE COEFFICIENT AND ITS ASSOCIATED MULTIPLIER.

DESIGN FILL HEIGHT GIVEN IN THE TABLES IS THE HEIGHT FROM THE TOP OF THE EARTH FILL OR ROADWAY TO THE TOP OF THE TOP SLAB.

ALL CULVERTS MEET STRENGTH REQUIREMENTS FOR MILITARY 24 kips TANDEM AXLE LOADING.

AT CONTRACTOR'S OPTION, A MODIFIED J3 ALTERNATIVE MAY BE UTILIZED WHEN THE DISTANCE BETWEEN THE ENDS OF J3 BARS AT TOP SLAB IS LESS THAN 2'-0". J3 BARS WITH HORIZONTAL LENGTH L1 (Instead of C1) MUST BE USED, WHERE L1 IS EQUAL TO 18", 22", AND 28" FOR #4, #5, AND #6 BARS, RESPECTIVELY. ADDITIONAL P1 BAR IS REQUIRED WITH THE MODIFIED J3 ALTERNATIVE AND MUST BE OF THE SAME SIZE AND SPACING AS J3 BAR WITH A LENGTH EQUAL TO A1 BAR. NO ADDITIONAL PAYMENT WILL BE MADE FOR THIS SUBSTITUTION.

MISSOURI HIGHWAY AND TRANSPORTATION COMMISSION

CONCRETE SINGLE BOX CULVERT
MEMBER SIZES AND REINFORCEMENT
(HS20 & HS20 MOD. LOADING)

DATE: | EFFECTIVE: 04-01-2002 | 703.15C | 1/13

| | DESIGN FILL | MEMBER THICKNESSES | | | Span (S) = 5 ft; HT (ft) = 3 | | |

	DESIGN FILL	MEMBER THICKNESSES			TOP SLAB BARS				BOTTOM SLAB BARS				WALL BARS					COEFFICIENTS (see note)				"C" Multiplier	"K" Multiplier	
					Span (S) = 6 ft, HT (ft) = 4 or 5																			
		TS	BS	TX	A1	Bars	J3	Bars	A2	Bars	J4	Bars		B2 Bars		F	Bars	J4		J3		S = 6 ft	HT = 4 ft	HT = 5 ft
	(ft-in)	Thick	Thick.	Thick	Size	c to c	Size	c to c	Size	c to c	Size	c to c	G1	Size	c to c	Size	c to c	K3	C4	K2	C1	in	in	in
HS20	0'-9"	11	9	8	5	8.5	4	11.0	5	8.0	4	9.0	12	5	11.5	4	14.0	0.87	0.37	0.46	0.40	80	63	75
HS20	2'-7"	8	9	8	4	7.0	4	10.5	4	6.0	4	11.5	12	5	11.5	4	14.0	0.91	0.35	0.43	0.37	80	60	72
HS20	4'-3"	8	8	8	4	11.0	4	11.5	4	7.5	4	11.5	0	5	11.5	4	14.0	0.91	0.35	0.44	0.35	80	59	71
HS20	5'-11"	8	8	8	4	11.0	4	11.5	4	7.5	4	11.5	0	5	11.5	4	14.0	0.91	0.34	0.44	0.35	80	59	71
HS20	7'-6"	8	8	8	4	10.0	4	11.5	4	7.0	4	11.5	0	5	11.5	4	14.0	0.91	0.34	0.44	0.34	80	59	71
HS20 MOD	0'-8"	12	9	8	5	7.0	4	9.5	5	7.0	4	7.0	12	5	11.5	4	14.0	0.86	0.37	0.46	0.40	80	64	76
HS20 MOD	2'-7"	8	9	8	4	6.0	4	9.0	5	8.0	4	11.0	12	5	11.5	4	14.0	0.91	0.35	0.43	0.37	80	60	72
HS20 MOD	4'-3"	8	8	8	4	9.5	4	11.5	4	7.0	4	11.5	0	5	11.5	4	14.0	0.91	0.35	0.44	0.36	80	59	71
HS20 MOD	5'-11"	8	8	8	4	9.5	4	11.5	4	7.0	4	11.5	0	5	11.5	4	14.0	0.91	0.34	0.44	0.35	80	59	71
HS20 MOD	7'-6"	8	8	8	4	9.0	4	11.5	4	7.0	4	11.5	0	5	11.5	4	14.0	0.91	0.34	0.44	0.34	80	59	71
HS20 or HS20 MOD	9'-2"	8	8	8	4	11.5	4	11.5	4	8.0	4	11.5	0	5	11.5	4	14.0	0.91	0.34	0.44	0.33	80	59	71
HS20 or HS20 MOD	10'-10"	8	8	8	4	9.5	4	11.5	4	7.0	4	11.5	0	5	11.5	4	14.0	0.91	0.33	0.44	0.33	80	59	71
HS20 or HS20 MOD	12'-5"	8	9	8	4	8.5	4	11.5	4	6.5	4	10.5	0	5	11.5	4	14.0	0.91	0.32	0.44	0.33	80	60	72
HS20 or HS20 MOD	14'-1"	8	9	8	4	7.5	4	9.5	4	6.0	4	10.5	0	5	11.5	4	14.0	0.91	0.32	0.43	0.33	80	60	72
HS20 or HS20 MOD	15'-9"	8	9	8	4	7.0	4	9.0	5	8.5	4	9.5	0	5	11.5	4	14.0	0.91	0.32	0.43	0.33	80	60	72
HS20 or HS20 MOD	17'-5"	8	10	8	4	6.0	4	8.0	5	8.5	4	10.5	0	5	11.5	4	14.0	0.91	0.30	0.42	0.34	80	61	73
HS20 or HS20 MOD	19'-0"	8	10	8	5	9.0	4	7.0	5	7.5	4	9.0	0	5	11.5	4	14.0	0.91	0.30	0.42	0.33	80	61	73
HS20 or HS20 MOD	20'-7"	9	10	8	5	9.0	4	7.5	5	7.0	4	8.5	0	5	11.5	4	14.0	0.90	0.31	0.43	0.32	80	62	74
HS20 or HS20 MOD	22'-3"	9	11	8	5	8.5	4	7.0	5	7.5	4	9.0	0	5	11.5	4	14.0	0.90	0.29	0.42	0.32	80	63	75
HS20 or HS20 MOD	23'-10"	9	11	8	5	7.5	4	6.5	5	7.0	4	9.0	0	5	11.5	4	14.0	0.90	0.29	0.42	0.32	80	63	75
HS20 or HS20 MOD	25'-5"	10	11	8	5	7.5	4	7.0	5	6.5	4	7.5	0	5	11.5	4	14.0	0.89	0.30	0.43	0.31	80	64	76
HS20 or HS20 MOD	27'-1"	10	12	8	5	7.0	4	6.5	5	7.0	4	8.5	0	5	11.5	4	14.0	0.89	0.29	0.43	0.31	80	65	77
HS20 or HS20 MOD	28'-8"	10	12	8	5	7.0	4	6.0	5	6.5	4	8.0	0	5	11.5	4	14.0	0.89	0.29	0.43	0.31	80	65	77
HS20 or HS20 MOD	30'-3"	11	12	8	5	7.0	4	6.5	5	6.0	4	7.0	0	5	11.5	4	14.0	0.88	0.29	0.44	0.30	80	66	78
HS20 or HS20 MOD	31'-11"	11	13	8	5	7.0	4	6.0	5	6.0	4	8.0	0	5	11.5	4	14.0	0.88	0.28	0.43	0.31	80	67	79

	DESIGN FILL	MEMBER THICKNESSES			TOP SLAB BARS				BOTTOM SLAB BARS				WALL BARS					COEFFICIENTS (see note)				"C" Multiplier	"K" Multiplier	
					Span (S) = 6 ft, HT (ft) = 6 or 7																			
		TS	BS	TX	A1	Bars	J3	Bars	A2	Bars	J4	Bars		B2 Bars		F	Bars	J4		J3		S = 6 ft	HT = 6 ft	HT = 7 ft
	(ft-in)	Thick	Thick.	Thick	Size	c to c	Size	c to c	Size	c to c	Size	c to c	G1	Size	c to c	Size	c to c	K3	C4	K2	C1	in	in	in
HS20	0'-9"	11	9	8	5	8.0	4	11.0	5	7.0	4	9.0	12	5	11.5	4	14.0	0.90	0.48	0.33	0.64	80	87	99
HS20	2'-7"	8	9	8	4	7.0	4	11.0	5	9.0	4	11.5	12	5	11.5	4	14.0	0.93	0.44	0.31	0.48	80	84	96
HS20	4'-3"	8	8	8	4	10.0	4	11.5	4	7.0	4	11.5	0	5	11.5	4	14.0	0.93	0.41	0.31	0.43	80	83	95
HS20	5'-11"	8	8	8	4	10.5	4	11.5	4	7.0	4	10.5	0	5	11.5	4	14.0	0.93	0.40	0.31	0.41	80	83	95
HS20	7'-6"	8	8	8	4	9.5	4	11.5	4	6.5	4	9.0	0	5	11.5	4	14.0	0.93	0.39	0.31	0.39	80	83	95
HS20 MOD	0'-8"	12	10	8	5	7.0	4	9.5	5	7.0	4	9.0	12	5	11.5	4	14.0	0.90	0.51	0.34	0.65	80	89	101
HS20 MOD	2'-7"	8	9	8	5	8.5	4	9.0	5	7.0	4	10.5	12	5	11.5	4	14.0	0.93	0.44	0.31	0.48	80	84	96
HS20 MOD	4'-3"	8	8	8	4	9.0	4	11.5	4	6.0	4	11.0	0	5	11.5	4	14.0	0.93	0.41	0.31	0.43	80	83	95
HS20 MOD	5'-11"	8	8	8	4	9.0	4	11.5	4	6.5	4	10.5	0	5	11.5	4	14.0	0.93	0.40	0.31	0.41	80	83	95
HS20 MOD	7'-6"	8	8	8	4	9.0	4	11.5	4	6.0	4	9.0	0	5	11.5	4	14.0	0.93	0.39	0.31	0.39	80	83	95
HS20 or HS20 MOD	9'-2"	8	8	8	4	11.0	4	11.5	4	7.5	4	9.0	0	5	11.5	4	14.0	0.93	0.38	0.31	0.38	80	83	95
HS20 or HS20 MOD	10'-10"	8	8	8	4	9.5	4	11.0	4	6.5	4	8.0	0	5	11.5	4	14.0	0.93	0.38	0.31	0.38	80	83	95
HS20 or HS20 MOD	12'-5"	8	9	8	4	8.5	4	9.0	4	6.5	4	9.0	0	5	11.5	4	14.0	0.93	0.37	0.31	0.38	80	84	96
HS20 or HS20 MOD	14'-1"	8	9	8	4	7.5	4	8.5	4	6.0	4	8.0	0	5	11.5	4	14.0	0.93	0.37	0.31	0.37	80	84	96
HS20 or HS20 MOD	15'-9"	8	9	8	4	7.0	4	7.0	5	8.5	4	7.0	0	5	11.5	4	14.0	0.93	0.37	0.31	0.37	80	84	96
HS20 or HS20 MOD	17'-5"	8	10	8	4	6.0	4	7.0	5	8.5	4	7.0	0	5	11.5	4	14.0	0.93	0.36	0.30	0.37	80	85	97
HS20 or HS20 MOD	19'-0"	8	10	8	5	9.0	4	6.0	5	7.5	4	6.5	0	5	11.5	4	14.0	0.93	0.36	0.30	0.37	80	85	97
HS20 or HS20 MOD	20'-7"	9	11	8	5	9.0	4	6.0	5	7.0	4	6.5	0	5	11.5	4	14.0	0.92	0.36	0.31	0.37	80	87	99
HS20 or HS20 MOD	22'-3"	9	11	8	5	8.5	5	8.5	5	7.5	4	6.0	0	5	11.5	4	14.0	0.92	0.36	0.32	0.37	80	87	99
HS20 or HS20 MOD	23'-10"	9	11	9	5	7.5	4	6.0	5	7.0	4	6.5	0	5	11.5	4	14.0	0.92	0.36	0.31	0.37	81	87	99
HS20 or HS20 MOD	25'-5"	10	12	9	5	8.0	4	6.0	5	7.0	4	6.5	0	5	11.5	4	14.0	0.92	0.36	0.32	0.37	81	89	101
HS20 or HS20 MOD	27'-1"	10	12	9	5	7.5	5	9.0	5	7.0	4	6.0	0	5	11.5	4	14.0	0.92	0.36	0.36	0.38	81	89	101
HS20 or HS20 MOD	28'-8"	10	12	9	5	7.0	5	8.5	5	6.5	5	9.0	0	5	11.5	4	14.0	0.92	0.36	0.36	0.38	81	89	101
HS20 or HS20 MOD	30'-3"	11	13	10	5	7.0	4	6.0	5	6.5	4	6.5	0	5	11.5	4	14.0	0.91	0.36	0.32	0.37	82	91	103
HS20 or HS20 MOD	31'-11"	11	13	10	5	7.0	5	9.0	5	6.5	4	6.0	0	5	11.5	4	14.0	0.91	0.36	0.37	0.38	82	91	103

	DESIGN FILL	MEMBER THICKNESSES			TOP SLAB BARS				BOTTOM SLAB BARS				WALL BARS					COEFFICIENTS (see note)				"C" Multiplier	"K" Multiplier	
					Span (S) = 6 ft, HT (ft) = 8 or 9																			
		TS	BS	TX	A1	Bars	J3	Bars	A2	Bars	J4	Bars		B2 Bars		F	Bars	J4		J3		S = 6 ft	HT = 8 ft	HT =9 ft
	(ft-in)	Thick	Thick.	Thick	Size	c to c	Size	c to c	Size	c to c	Size	c to c	G1	Size	c to c	Size	c to c	K3	C4	K2	C1	in	in	in
HS20	0'-9"	11	9	9	5	8.0	4	11.0	5	7.0	4	8.5	12	5	11.5	4	14.0	0.92	0.67	0.26	0.64	81	111	123
HS20	2'-7"	8	9	9	4	6.5	4	10.5	5	8.5	4	9.5	12	5	11.5	4	14.0	0.95	0.67	0.24	0.64	81	108	120
HS20	4'-3"	8	8	9	4	9.5	4	11.5	4	6.5	4	7.5	0	5	11.5	4	14.0	0.95	0.53	0.24	0.64	81	107	119
HS20	5'-11"	8	8	9	4	10.0	4	11.5	4	6.5	4	7.0	0	5	11.5	4	14.0	0.95	0.49	0.24	0.57	81	107	119
HS20	7'-6"	8	8	9	4	9.5	4	10.5	4	6.5	4	6.5	0	5	11.5	4	14.0	0.95	0.48	0.24	0.53	81	107	119
HS20 MOD	0'-8"	12	10	9	5	7.0	4	9.5	5	6.5	4	8.0	12	5	11.5	4	14.0	0.92	0.67	0.27	0.64	81	113	125
HS20 MOD	2'-7"	8	10	9	5	8.5	4	9.0	5	7.0	4	9.0	12	5	11.5	4	14.0	0.95	0.67	0.24	0.64	81	109	121
HS20 MOD	4'-3"	8	8	9	4	8.5	4	11.5	5	9.0	4	7.0	0	5	11.5	4	14.0	0.95	0.53	0.24	0.64	81	107	119
HS20 MOD	5'-11"	8	8	9	4	9.0	4	11.0	4	6.0	4	7.0	0	5	11.5	4	14.0	0.95	0.49	0.24	0.57	81	107	119
HS20 MOD	7'-6"	8	8	9	4	9.0	4	10.5	4	6.0	4	6.5	0	5	11.5	4	14.0	0.95	0.48	0.24	0.53	81	107	119
HS20 or HS20 MOD	9'-2"	8	8	9	4	11.0	4	10.5	4	7.0	4	6.0	0	5	11.5	4	14.0	0.95	0.47	0.24	0.50	81	107	119
HS20 or HS20 MOD	10'-10"	8	8	9	4	9.5	4	9.0	4	6.5	5	8.5	0	5	11.5	4	14.0	0.95	0.47	0.24	0.48	81	107	119
HS20 or HS20 MOD	12'-5"	8	9	9	4	9.0	4	8.0	4	6.5	4	6.0	0	5	11.5	4	14.0	0.95	0.47	0.24	0.47	81	108	120
HS20 or HS20 MOD	14'-1"	8	9	9	4	7.5	4	7.0	4	6.0	5	8.5	0	5	11.5	4	14.0	0.95	0.47	0.24	0.46	81	108	120
HS20 or HS20 MOD	15'-9"	8	10	9	4	7.0	4	6.5	5	8.5	4	6.0	0	5	11.5	4	14.0	0.95	0.47	0.24	0.46	81	109	121
HS20 or HS20 MOD	17'-5"	8	10	9	4	7.0	4	6.0	5	9.0	5	8.5	0	5	11.5	4	14.0	0.95	0.48	0.24	0.45	81	109	121
HS20 or HS20 MOD	19'-0"	8	10	10	4	6.0	4	6.0	5	8.0	5	8.5	0	5	11.5	4	14.0	0.95	0.46	0.24	0.44	82	109	121
HS20 or HS20 MOD	20'-7"	9	11	10	4	6.5	4	6.0	5	8.5	5	9.0	0	5	11.5	4	14.0	0.94	0.47	0.24	0.45	82	111	123
HS20 or HS20 MOD	22'-3"	9	11	10	5	9.0	5	9.0	5	8.0	5	8.5	0	5	11.0	4	14.0	0.94	0.46	0.28	0.45	82	111	123
HS20 or HS20 MOD	23'-10"	9	11	11	5	9.0	4	6.0	5	7.5	5	8.5	0	5	11.5	4	14.0	0.94	0.45	0.24	0.44	83	111	123
HS20 or HS20 MOD	25'-5"	10	12	11	5	9.0	4	6.0	5	8.0	5	9.0	0	5	11.5	4	14.0	0.93	0.46	0.25	0.44	83	113	125
HS20 or HS20 MOD	27'-1"	10	12	11	5	8.5	5	9.0	5	7.0	5	8.5	0	5	11.0	4	14.0	0.93	0.46	0.29	0.45	83	113	125
HS20 or HS20 MOD	28'-8"	10	12	11	5	8.0	5	8.5	5	7.0	5	7.5	0	5	10.5	4	14.0	0.93	0.45	0.29	0.45	83	113	125
HS20 or HS20 MOD	30'-3"	11	13	12	5	8.5	5	9.0	5	7.0	5	8.5	0	5	11.0	4	14.0	0.93	0.45	0.29	0.45	84	115	127
HS20 or HS20 MOD	31'-11"	11	13	12	5	8.0	5	8.5	5	7.0	5	8.0	0	5	11.0	4	14.0	0.93	0.45	0.29	0.45	84	115	127

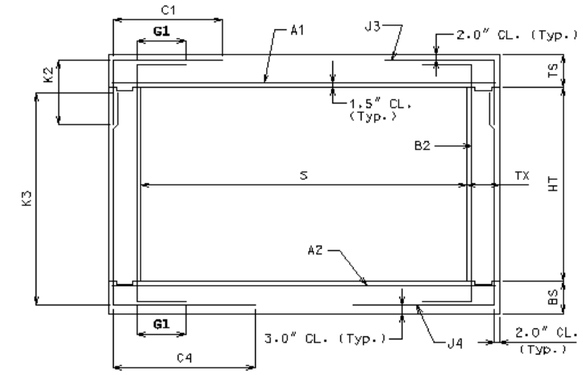

SECTION THRU BOX

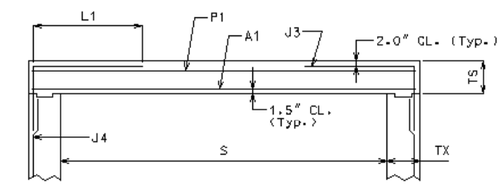

PART SECTION THRU BOX FOR MODIFIED J3 ALTERNATIVE
(B2 BAR NOT SHOWN FOR CLARITY)

NOTE: IF DESIGN FILL FALLS BETWEEN TABULATED FILLS, USE THE ADJACENT TABULATED FILL WHICH YIELDS THE GREATER MEMBER THICKNESS. IF THE MEMBER THICKNESSES ARE EQUAL, USE THE ADJACENT TABULATED FILL WHICH YIELDS THE GREATER AREA OF REINFORCEMENT.

SPECIAL DESIGNS ARE REQUIRED WHEN THE DESIGN FILL IS OUTSIDE THE RANGE OF TABULATED FILLS.

ALL DIMENSIONS ARE IN inch UNLESS OTHERWISE SPECIFIED.

COEFFICIENTS: DIMENSIONS MARKED WITH C# OR K# ARE THE PRODUCT OF THE COEFFICIENT AND ITS ASSOCIATED MULTIPLIER.

DESIGN FILL HEIGHT GIVEN IN THE TABLES IS THE HEIGHT FROM THE TOP OF THE EARTH FILL OR ROADWAY TO THE TOP OF THE TOP SLAB.

ALL CULVERTS MEET STRENGTH REQUIREMENTS FOR MILITARY 24 kips TANDEM AXLE LOADING.

AT CONTRACTOR'S OPTION, A MODIFIED J3 ALTERNATIVE MAY BE UTILIZED WHEN THE DISTANCE BETWEEN THE ENDS OF J3 BARS AT TOP SLAB IS LESS THAN 2'-0". J3 BARS WITH HORIZONTAL LENGTH L1 (Instead of C1) MUST BE USED, WHERE L1 IS EQUAL TO 18", 22", AND 28" FOR #4, #5, AND #6 BARS, RESPECTIVELY. ADDITIONAL P1 BAR IS REQUIRED WITH THE MODIFIED J3 ALTERNATIVE AND MUST BE OF THE SAME SIZE AND SPACING AS J3 BAR WITH A LENGTH EQUAL TO A1 BAR. NO ADDITIONAL PAYMENT WILL BE MADE FOR THIS SUBSTITUTION.

MISSOURI HIGHWAY AND TRANSPORTATION COMMISSION

CONCRETE SINGLE BOX CULVERT

MEMBER SIZES AND REINFORCEMENT

(HS20 & HS20 MOD. LOADING)

DATE: | EFFECTIVE: 04-01-2002 | **703.15C** | 3/13

Span (S) = 7 ft

HT (ft) = 4 or 5 or 6

	DESIGN FILL	MEMBER THICKNESSES			TOP SLAB BARS				BOTTOM SLAB BARS				WALL BARS					COEFFICIENTS (see note)				"C" Multiplier	"K" Multiplier		
		TS	BS	TX	A1	Bars	J3	Bars	A2	Bars	J4	Bars		B2 Bars		F	Bars	J4		J3		S = 7 ft	HT = 4 ft	HT = 5 ft	HT = 6 ft
	(ft-in)	Thick	Thick.	Thick	Size	c to c	Size	c to c	Size	c to c	Size	c to c	G1	Size	c to c	Size	c to c	K3	C4	K2	C1	in	in	in	in
HS20	0'-9"	11	9	8	5	7.0	4	11.0	5	7.0	4	7.5	12	5	11.5	4	14.0	0.89	0.36	0.46	0.41	92	63	75	87
	2'-6"	9	10	8	4	6.0	4	9.0	5	7.5	4	8.5	12	5	11.5	4	14.0	0.91	0.33	0.44	0.35	92	62	74	86
	4'-3"	8	8	8	4	7.5	4	11.0	5	8.5	4	9.5	0	5	11.5	4	14.0	0.92	0.33	0.44	0.34	92	59	71	83
	5'-11"	8	8	8	4	7.5	4	11.0	5	8.5	4	9.0	0	5	11.5	4	14.0	0.92	0.32	0.44	0.33	92	59	71	83
	7'-6"	8	9	8	4	7.5	4	10.5	5	8.5	4	9.0	0	5	11.5	4	14.0	0.92	0.31	0.44	0.32	92	60	72	84
HS20 MOD	0'-8"	12	10	8	5	6.5	4	9.5	5	6.0	4	7.0	12	5	11.5	4	14.0	0.88	0.36	0.46	0.42	92	65	77	89
	2'-6"	9	10	8	5	7.5	4	7.5	5	6.5	4	9.0	12	5	11.5	4	14.0	0.91	0.33	0.43	0.35	92	62	74	86
	4'-3"	8	9	8	4	7.0	4	9.5	5	8.5	4	10.5	0	5	11.5	4	14.0	0.92	0.32	0.43	0.34	92	60	72	84
	5'-11"	8	9	8	4	7.0	4	9.5	5	9.0	4	9.0	0	5	11.5	4	14.0	0.92	0.31	0.44	0.33	92	60	72	84
	7'-6"	8	9	8	4	7.0	4	9.0	5	8.5	4	9.5	0	5	11.5	4	14.0	0.92	0.31	0.43	0.33	92	60	72	84
HS20 or HS20 MOD	9'-2"	8	8	8	4	8.5	4	11.0	5	9.0	4	9.0	0	5	11.5	4	14.0	0.92	0.32	0.44	0.32	92	59	71	83
	10'-10"	8	9	8	4	7.0	4	9.0	5	9.0	4	9.0	0	5	11.5	4	14.0	0.92	0.30	0.43	0.32	92	60	72	84
	12'-5"	8	9	8	4	6.5	4	8.0	5	7.5	4	8.0	0	5	11.5	4	14.0	0.92	0.30	0.43	0.32	92	60	72	84
	14'-1"	8	10	8	5	9.0	4	7.0	5	7.5	4	8.5	0	5	11.5	4	14.0	0.92	0.29	0.42	0.32	92	61	73	85
	15'-9"	8	10	8	5	8.0	4	6.0	5	7.0	4	7.5	0	5	11.5	4	14.0	0.92	0.29	0.42	0.32	92	61	73	85
	17'-4"	9	11	8	5	8.0	4	6.5	5	7.0	4	7.5	0	5	11.5	4	14.0	0.91	0.28	0.43	0.30	92	63	75	87
	18'-11"	9	12	8	5	7.0	5	9.0	5	6.5	4	7.0	0	5	11.5	4	14.0	0.91	0.28	0.42	0.31	92	64	76	88
	20'-6"	10	12	8	5	7.0	4	6.0	5	6.0	4	6.5	0	5	11.5	4	14.0	0.90	0.28	0.43	0.29	92	65	77	89
	22'-2"	10	12	8	5	7.0	5	8.5	5	6.0	4	7.0	0	5	11.5	4	14.0	0.90	0.27	0.43	0.30	92	65	77	89
	23'-9"	10	12	8	5	6.0	5	7.5	6	8.0	4	6.5	0	5	11.5	4	14.0	0.90	0.27	0.49	0.30	92	65	77	89
	25'-4"	11	13	8	5	6.0	5	8.0	6	7.5	4	6.5	0	5	11.5	4	14.0	0.90	0.27	0.44	0.29	92	67	79	91
	27'-0"	11	13	8	6	8.5	5	7.5	6	8.0	4	6.0	0	5	11.5	4	14.0	0.90	0.27	0.49	0.29	92	67	79	91
	28'-6"	12	13	9	6	8.5	5	9.0	6	7.5	4	6.0	0	5	11.5	4	14.0	0.89	0.28	0.44	0.30	93	68	80	92
	30'-2"	12	14	9	6	8.0	5	8.5	6	7.5	4	6.5	0	5	11.5	4	14.0	0.89	0.27	0.43	0.30	93	69	81	93
	31'-10"	12	14	9	6	7.5	5	7.5	6	7.0	4	6.5	0	5	11.5	4	14.0	0.89	0.27	0.49	0.30	93	69	81	93

SPAN (S) = 7 ft

HT (ft) = 7 or 8

	DESIGN FILL	MEMBER THICKNESSES			TOP SLAB BARS				BOTTOM SLAB BARS				WALL BARS					COEFFICIENTS (see note)				"C" Multiplier	"K" Multiplier	
		TS	BS	TX	A1	Bars	J3	Bars	A2	Bars	J4	Bars		B2 Bars		F	Bars	J4		J3		S = 7 ft	HT = 7 ft	HT = 8 ft
	(ft-in)	Thick	Thick.	Thick	Size	c to c	Size	c to c	Size	c to c	Size	c to c	G1	Size	c to c	Size	c to c	K3	C4	K2	C1	in	in	in
HS20	0'-9"	11	9	8	5	7.0	4	11.0	5	6.0	4	7.0	12	5	11.5	4	14.0	0.91	0.48	0.29	0.62	92	99	111
	2'-6"	9	10	8	5	8.0	4	8.0	5	6.5	4	8.5	12	5	11.5	4	14.0	0.94	0.43	0.27	0.46	92	98	110
	4'-3"	8	8	8	4	7.0	4	10.5	5	7.5	4	7.5	0	5	11.5	4	14.0	0.94	0.39	0.27	0.41	92	95	107
	5'-11"	8	8	8	4	7.5	4	9.5	5	7.5	4	7.0	0	5	11.5	4	14.0	0.94	0.38	0.27	0.39	92	95	107
	7'-6"	8	9	8	4	7.0	4	9.0	5	8.5	4	8.0	0	5	11.5	4	14.0	0.94	0.37	0.27	0.37	92	96	108
HS20 MOD	0'-8"	12	10	8	5	6.0	4	9.5	6	8.0	4	7.0	12	5	11.5	4	14.0	0.91	0.50	0.30	0.62	92	101	113
	2'-6"	9	10	8	5	7.0	4	7.5	6	8.5	4	8.5	12	5	11.5	4	14.0	0.93	0.44	0.27	0.50	92	98	110
	4'-3"	8	9	8	4	6.5	4	9.0	5	7.5	4	9.0	0	5	11.5	4	14.0	0.94	0.40	0.27	0.41	92	96	108
	5'-11"	8	9	8	4	7.0	4	9.0	5	8.0	4	8.5	0	5	11.5	4	14.0	0.94	0.38	0.27	0.39	92	96	108
	7'-6"	8	9	8	4	7.0	4	8.0	5	8.0	4	7.5	0	5	11.5	4	14.0	0.94	0.37	0.27	0.37	92	96	108
HS20 or HS20 MOD	9'-2"	8	8	8	4	8.0	4	9.0	5	8.5	4	6.5	0	5	11.5	4	14.0	0.94	0.36	0.27	0.36	92	95	107
	10'-10"	8	9	8	4	7.0	4	7.5	5	8.5	4	7.0	0	5	11.5	4	14.0	0.94	0.35	0.27	0.36	92	96	108
	12'-5"	8	9	8	4	6.0	4	6.5	5	7.5	4	6.5	0	5	11.5	4	14.0	0.94	0.35	0.27	0.35	92	96	108
	14'-1"	8	10	8	5	9.0	4	6.0	5	7.5	4	6.0	0	5	11.5	4	14.0	0.94	0.34	0.27	0.35	92	97	109
	15'-9"	8	10	8	5	8.0	5	8.5	5	7.0	5	8.5	0	5	11.5	4	14.0	0.94	0.35	0.28	0.36	92	97	109
	17'-4"	9	11	8	5	8.0	5	7.5	5	7.0	5	8.5	0	5	11.5	4	14.0	0.93	0.34	0.32	0.35	92	99	111
	18'-11"	9	11	9	5	7.0	5	8.5	5	6.5	5	9.0	0	5	11.5	4	14.0	0.93	0.34	0.32	0.36	93	99	111
	20'-6"	10	12	9	5	7.0	5	8.0	5	6.5	5	8.5	0	5	11.5	4	14.0	0.93	0.34	0.32	0.35	93	101	113
	22'-2"	10	12	9	5	7.0	5	7.0	5	6.0	5	8.0	0	5	11.5	4	14.0	0.93	0.34	0.32	0.35	93	101	113
	23'-9"	10	12	10	5	6.5	5	8.0	6	8.5	5	8.5	0	5	11.5	4	14.0	0.93	0.34	0.32	0.36	94	101	113
	25'-4"	11	13	10	5	6.5	5	7.5	5	6.0	5	8.5	0	5	11.5	4	14.0	0.92	0.34	0.32	0.35	94	103	115
	27'-0"	11	13	10	5	6.0	5	7.0	6	8.0	5	8.0	0	5	11.5	4	14.0	0.92	0.34	0.32	0.35	94	103	115
	28'-6"	12	14	10	5	6.0	5	7.0	6	7.5	5	7.5	0	5	11.5	4	14.0	0.91	0.34	0.33	0.35	94	105	117
	30'-2"	12	14	11	5	6.0	5	7.5	6	8.0	5	8.5	0	5	11.5	4	14.0	0.91	0.34	0.33	0.35	95	105	117
	31'-10"	12	14	11	6	8.5	5	7.0	6	7.5	5	7.5	0	5	11.5	4	14.0	0.91	0.34	0.33	0.35	95	105	117

SPAN (S) = 7 ft

HT (ft) = 9 or 10

	DESIGN FILL	MEMBER THICKNESSES			TOP SLAB BARS				BOTTOM SLAB BARS				WALL BARS					COEFFICIENTS (see note)				"C" Multiplier	"K" Multiplier	
		TS	BS	TX	A1	Bars	J3	Bars	A2	Bars	J4	Bars		B2 Bars		F	Bars	J4		J3		S = 7 ft	HT = 9 ft	HT = 10 ft
	(ft-in)	Thick	Thick.	Thick	Size	c to c	Size	c to c	Size	c to c	Size	c to c	G1	Size	c to c	Size	c to c	K3	C4	K2	C1	in	in	in
HS20	0'-9"	11	10	9	5	7.0	4	9.5	5	6.5	4	7.5	12	5	11.5	4	14.0	0.93	0.65	0.23	0.63	93	124	136
	2'-6"	9	10	9	5	9.0	4	8.5	5	7.0	4	7.5	12	5	11.5	4	14.0	0.95	0.65	0.22	0.63	93	122	134
	4'-3"	8	9	9	4	7.5	4	9.0	5	8.5	4	7.0	0	5	11.5	4	14.0	0.95	0.53	0.22	0.62	93	120	132
	5'-11"	8	9	9	4	7.5	4	9.0	5	8.5	4	6.5	0	5	11.5	4	14.0	0.95	0.49	0.22	0.52	93	120	132
	7'-6"	8	9	9	4	7.5	4	7.5	5	8.5	5	9.0	0	5	11.5	4	14.0	0.95	0.47	0.22	0.48	93	120	132
HS20 MOD	0'-8"	12	11	9	5	6.0	4	9.0	6	8.0	4	7.0	12	5	11.5	4	14.0	0.93	0.65	0.24	0.63	93	126	138
	2'-6"	9	10	9	5	7.0	4	7.0	6	8.0	4	7.0	12	5	11.5	4	14.0	0.95	0.65	0.22	0.63	93	122	134
	4'-3"	8	9	9	4	7.0	4	9.0	5	7.5	4	7.0	0	5	11.5	4	14.0	0.95	0.53	0.22	0.62	93	120	132
	5'-11"	8	9	9	4	7.0	4	8.5	5	8.0	4	6.0	0	5	11.5	4	14.0	0.95	0.49	0.22	0.52	93	120	132
	7'-6"	8	9	9	4	7.0	4	7.5	5	7.5	5	9.0	0	5	11.5	4	14.0	0.95	0.47	0.22	0.48	93	120	132
HS20 or HS20 MOD	9'-2"	8	9	9	4	9.0	4	7.5	4	6.0	5	8.5	0	5	11.5	4	14.0	0.95	0.46	0.22	0.45	93	120	132
	10'-10"	8	9	9	4	7.5	4	6.5	5	8.5	5	7.5	0	5	11.5	4	14.0	0.95	0.45	0.22	0.44	93	120	132
	12'-5"	8	10	9	4	6.5	4	6.0	5	7.5	5	8.0	0	5	11.0	4	14.0	0.95	0.45	0.22	0.43	93	121	133
	14'-1"	8	10	9	4	6.0	5	8.5	5	7.5	5	7.0	0	5	11.0	4	14.0	0.95	0.45	0.23	0.43	93	121	133
	15'-9"	8	10	10	5	8.5	5	8.0	5	7.0	5	7.0	0	5	11.5	4	14.0	0.95	0.43	0.25	0.42	94	121	133
	17'-4"	9	11	10	5	8.5	5	8.5	5	7.0	5	7.5	0	5	11.0	4	14.0	0.95	0.43	0.26	0.43	94	123	135
	18'-11"	9	11	10	5	8.0	5	7.5	5	7.0	5	7.0	0	5	10.5	4	14.0	0.95	0.43	0.26	0.42	94	123	135
	20'-6"	10	12	11	5	8.0	5	8.5	5	7.0	5	7.5	0	5	11.0	4	14.0	0.94	0.42	0.26	0.42	95	125	137
	22'-2"	10	12	11	5	7.5	5	7.5	5	6.5	5	7.0	0	5	10.5	4	14.0	0.94	0.42	0.26	0.42	95	125	137
	23'-9"	10	13	11	5	7.0	5	7.0	5	6.5	5	7.0	0	5	10.0	4	14.0	0.94	0.42	0.26	0.42	95	126	138
	25'-4"	11	13	12	5	7.0	5	7.5	5	6.5	5	7.0	0	5	11.0	4	14.0	0.93	0.42	0.26	0.42	96	127	139
	27'-0"	11	13	12	5	7.0	5	7.0	5	6.0	5	7.0	0	5	10.0	4	14.0	0.93	0.42	0.26	0.42	96	127	139
	28'-6"	12	14	12	5	7.0	5	7.0	5	6.0	5	7.0	0	5	9.5	4	14.0	0.93	0.42	0.27	0.42	96	129	141
	30'-2"	12	14	13	5	7.0	5	7.0	5	6.0	5	7.0	0	5	10.5	4	14.0	0.93	0.41	0.27	0.41	97	129	141
	31'-10"	12	15	13	5	6.5	5	7.0	6	8.0	5	7.0	0	5	9.5	4	14.0	0.93	0.41	0.27	0.41	97	130	142

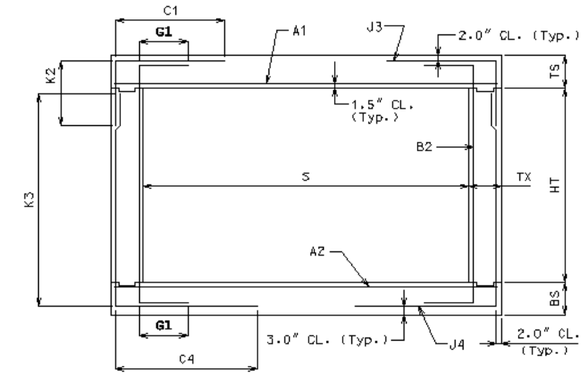

SECTION THRU BOX

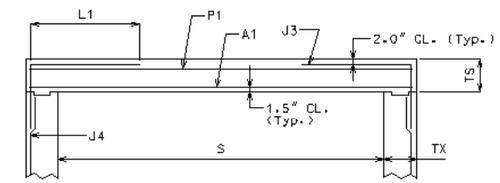

PART SECTION THRU BOX FOR MODIFIED J3 ALTERNATIVE

(B2 BAR NOT SHOWN FOR CLARITY)

NOTE: IF DESIGN FILL FALLS BETWEEN TABULATED FILLS, USE THE ADJACENT TABULATED FILL WHICH YIELDS THE GREATER MEMBER THICKNESS. IF THE MEMBER THICKNESSES ARE EQUAL, USE THE ADJACENT TABULATED FILL WHICH YIELDS THE GREATER AREA OF REINFORCEMENT.

SPECIAL DESIGNS ARE REQUIRED WHEN THE DESIGN FILL IS OUTSIDE THE RANGE OF TABULATED FILLS.

ALL DIMENSIONS ARE IN inch UNLESS OTHERWISE SPECIFIED.

COEFFICIENTS: DIMENSIONS MARKED WITH C# OR K# ARE THE PRODUCT OF THE COEFFICIENT AND ITS ASSOCIATED MULTIPLIER.

DESIGN FILL HEIGHT GIVEN IN THE TABLES IS THE HEIGHT FROM THE TOP OF THE EARTH FILL OR ROADWAY TO THE TOP OF THE TOP SLAB.

ALL CULVERTS MEET STRENGTH REQUIREMENTS FOR MILITARY 24 kips TANDEM AXLE LOADING.

AT CONTRACTOR'S OPTION, A MODIFIED J3 ALTERNATIVE MAY BE UTILIZED WHEN THE DISTANCE BETWEEN THE ENDS OF J3 BARS AT TOP SLAB IS LESS THAN 2'-0". J3 BARS WITH HORIZONTAL LENGTH L1 (Instead of C1) MUST BE USED, WHERE L1 IS EQUAL TO 18", 22", AND 28" FOR #4, #5, AND #6 BARS, RESPECTIVELY. ADDITIONAL P1 BAR IS REQUIRED WITH THE MODIFIED J3 ALTERNATIVE AND MUST BE OF THE SAME SIZE AND SPACING AS J3 BAR WITH A LENGTH EQUAL TO A1 BAR. NO ADDITIONAL PAYMENT WILL BE MADE FOR THIS SUBSTITUTION.

MISSOURI HIGHWAY AND TRANSPORTATION COMMISSION

CONCRETE SINGLE BOX CULVERT

MEMBER SIZES AND REINFORCEMENT

(HS20 & HS20 MOD. LOADING)

DATE: EFFECTIVE: 04-01-2002 **703.15C** 4/13

	DESIGN FILL	MEMBER THICKNESSES			Span (S) = 8 ft; HT (ft) = 5 or 6 or 7																							
					TOP SLAB BARS				BOTTOM SLAB BARS				WALL BARS					COEFFICIENTS (see note)				"C" Multiplier	"K" Multiplier		
		TS	BS	TX	A1	Bars	J3	Bars	A2	Bars	J4	Bars	B2 Bars			F	Bars	J4		J3		S = 8 ft	HT = 5 ft	HT = 6 ft	HT = 7 ft
	(ft-in)	Thick	Thick.	Thick	Size	c to c	Size	c to c	Size	c to c	Size	c to c	G1	Size	c to c	Size	c to c	K3	C4	K2	C1	in	in	in	in
HS20	0'-9"	11	10	8	5	6.5	4	10.5	5	6.0	4	6.5	12	5	11.5	4	14.0	0.90	0.36	0.38	0.43	104	76	88	100
	2'-6"	9	10	8	5	7.0	4	7.0	6	8.5	4	8.0	12	5	11.5	4	14.0	0.92	0.32	0.36	0.34	104	74	86	98
	4'-2"	9	9	8	4	6.0	4	8.5	5	7.0	4	8.5	0	5	11.5	4	14.0	0.93	0.31	0.37	0.33	104	73	85	97
	5'-11"	8	9	8	4	6.0	4	8.0	5	7.0	4	8.0	0	5	11.5	4	14.0	0.93	0.30	0.36	0.32	104	72	84	96
	7'-6"	8	9	8	5	9.0	4	7.0	5	7.0	4	7.0	0	5	11.5	4	14.0	0.93	0.30	0.36	0.31	104	72	84	96
HS20 MOD	0'-8"	12	10	8	6	8.0	4	9.5	6	7.0	4	6.5	12	5	11.5	4	14.0	0.90	0.35	0.39	0.44	104	77	89	101
	2'-6"	9	11	8	5	6.0	4	6.0	6	7.5	4	7.5	12	5	11.5	4	14.0	0.92	0.32	0.36	0.34	104	75	87	99
	4'-3"	8	10	8	5	8.5	4	7.0	5	7.0	4	8.0	0	5	11.5	4	14.0	0.93	0.30	0.36	0.33	104	73	85	97
	5'-11"	8	9	8	5	9.0	4	7.0	5	7.0	4	7.5	0	5	11.5	4	14.0	0.93	0.30	0.36	0.32	104	72	84	96
	7'-6"	8	9	8	5	8.5	4	7.0	5	6.5	4	7.0	0	5	11.5	4	14.0	0.93	0.30	0.36	0.31	104	72	84	96
HS20 MOD or HS20	9'-2"	8	9	8	4	6.5	4	8.0	5	7.5	4	7.5	0	5	11.5	4	14.0	0.93	0.29	0.36	0.30	104	72	84	96
	10'-10"	8	9	8	5	8.5	4	7.0	5	7.0	4	7.0	0	5	11.5	4	14.0	0.93	0.29	0.36	0.30	104	72	84	96
	12'-5"	8	10	8	5	7.5	5	9.0	5	6.5	4	7.0	0	5	11.5	4	14.0	0.93	0.28	0.35	0.31	104	73	85	97
	14'-1"	8	10	8	5	7.0	5	8.0	6	8.5	4	6.0	0	5	11.5	4	14.0	0.93	0.27	0.41	0.31	104	73	85	97
	15'-8"	9	11	8	5	6.5	5	7.5	6	8.5	4	6.0	0	5	11.5	4	14.0	0.92	0.27	0.42	0.30	104	75	87	99
	17'-3"	10	11	8	5	6.5	5	8.0	6	7.5	5	8.5	0	5	11.5	4	14.0	0.91	0.27	0.37	0.29	104	76	88	100
	18'-10"	10	12	8	5	6.0	5	7.0	6	7.5	5	9.0	0	5	11.5	4	14.0	0.92	0.26	0.42	0.29	104	77	89	101
	20'-5"	11	12	8	6	8.5	5	7.0	6	7.0	5	7.5	0	5	11.5	4	14.0	0.91	0.27	0.43	0.28	104	78	90	102
	22'-1"	11	13	8	6	8.0	5	7.0	6	7.0	5	8.0	0	5	11.5	4	14.0	0.91	0.26	0.42	0.28	104	79	91	103
	23'-8"	11	13	9	6	7.0	5	7.0	6	7.0	5	8.5	0	5	11.5	4	14.0	0.91	0.27	0.42	0.29	105	79	91	103
	25'-3"	12	14	9	6	7.5	5	7.0	6	7.0	5	8.5	0	5	11.5	4	14.0	0.90	0.26	0.42	0.28	105	81	93	105
	26'-11"	12	14	9	6	7.0	5	6.5	6	6.5	5	8.0	0	5	11.5	4	14.0	0.90	0.26	0.42	0.28	105	81	93	105
	28'-5"	13	15	9	6	7.0	5	7.0	6	6.5	5	8.5	0	5	11.5	4	14.0	0.89	0.26	0.42	0.28	105	83	95	107
	30'-1"	13	15	10	6	6.5	5	7.0	6	6.5	5	8.5	0	5	11.5	4	14.0	0.89	0.27	0.42	0.29	106	83	95	107
	31'-8"	14	16	10	6	6.5	5	7.0	6	6.0	5	8.5	0	5	11.5	4	14.0	0.89	0.26	0.43	0.28	106	85	97	109

	DESIGN FILL	MEMBER THICKNESSES			SPAN (S) = 8 ft; HT (ft) = 8 or 9																							
					TOP SLAB BARS				BOTTOM SLAB BARS				WALL BARS					COEFFICIENTS (see note)				"C" Multiplier	"K" Multiplier		
		TS	BS	TX	A1	Bars	J3	Bars	A2	Bars	J4	Bars	B2 Bars			F	Bars	J4		J3		S = 8 ft	HT = 8 ft	HT = 9 ft	
	(ft-in)	Thick	Thick.	Thick	Size	c to c	Size	c to c	Size	c to c	Size	c to c	G1	Size	c to c	Size	c to c	K3	C4	K2	C1	in	in	in	
HS20	0'-9"	11	10	9	5	6.0	4	9.5	6	7.5	4	6.5	12	5	11.5	4	14.0	0.92	0.44	0.26	0.61	105	112	124	
	2'-6"	9	10	9	5	7.0	4	7.0	6	8.0	4	7.0	12	5	11.5	4	14.0	0.95	0.41	0.24	0.43	105	110	122	
	4'-3"	8	9	9	4	6.0	4	8.0	5	7.0	4	7.0	0	5	11.5	4	14.0	0.95	0.38	0.24	0.39	105	108	120	
	5'-11"	8	9	9	4	6.0	4	7.5	5	7.0	4	7.0	0	5	11.5	4	14.0	0.95	0.36	0.24	0.37	105	108	120	
	7'-6"	8	9	9	5	9.0	4	7.0	5	6.5	4	6.0	0	5	11.5	4	14.0	0.95	0.35	0.24	0.36	105	108	120	
HS20 MOD	0'-8"	12	10	9	6	7.5	4	9.0	6	7.0	4	6.0	12	5	11.5	4	14.0	0.92	0.45	0.27	0.61	105	113	125	
	2'-6"	9	11	9	5	6.0	4	6.0	6	7.0	4	7.5	12	5	11.5	4	14.0	0.94	0.42	0.24	0.45	105	111	123	
	4'-3"	8	9	9	5	8.0	4	7.0	5	6.0	4	7.0	0	5	11.5	4	14.0	0.95	0.38	0.24	0.39	105	108	120	
	5'-11"	8	9	9	5	8.5	4	7.0	5	6.5	4	6.5	0	5	11.5	4	14.0	0.95	0.36	0.24	0.37	105	108	120	
	7'-6"	8	10	9	5	8.0	4	6.5	5	6.0	4	6.5	0	5	11.5	4	14.0	0.95	0.35	0.24	0.36	105	109	121	
HS20 MOD or HS20	9'-2"	8	9	9	4	6.5	4	7.0	5	7.5	4	6.0	0	5	11.5	4	14.0	0.95	0.34	0.24	0.35	105	108	120	
	10'-10"	8	10	9	5	8.5	4	6.5	5	6.5	4	6.0	0	5	11.5	4	14.0	0.95	0.33	0.24	0.34	105	109	121	
	12'-5"	8	10	9	5	7.5	5	8.5	5	6.5	5	9.0	0	5	11.5	4	14.0	0.95	0.34	0.28	0.35	105	109	121	
	14'-1"	8	11	9	5	7.0	5	7.0	5	6.0	5	8.5	0	5	11.5	4	14.0	0.95	0.33	0.28	0.35	105	110	122	
	15'-8"	9	11	9	5	6.5	5	7.0	6	8.5	5	7.5	0	5	11.5	4	14.0	0.94	0.33	0.28	0.34	105	111	123	
	17'-3"	10	12	9	5	6.5	5	7.0	6	8.5	5	7.0	0	5	11.5	4	14.0	0.93	0.33	0.29	0.34	105	113	125	
	18'-10"	10	12	9	5	6.5	5	6.5	6	8.0	5	7.0	0	5	11.5	4	14.0	0.93	0.32	0.29	0.33	105	113	125	
	20'-5"	11	13	10	5	6.5	5	7.0	6	8.0	5	7.5	0	5	11.5	4	14.0	0.93	0.33	0.29	0.34	106	115	127	
	22'-1"	11	13	10	6	8.5	5	7.0	6	7.5	5	7.0	0	5	11.5	4	14.0	0.93	0.32	0.29	0.34	106	115	127	
	23'-8"	11	14	10	6	8.0	5	6.0	6	7.5	5	7.0	0	5	11.5	4	14.0	0.93	0.32	0.29	0.34	106	116	128	
	25'-3"	12	14	11	6	8.0	5	7.0	6	7.0	5	7.0	0	5	11.5	4	14.0	0.92	0.32	0.29	0.34	107	117	129	
	26'-11"	12	15	11	6	7.5	5	6.5	6	7.0	5	7.0	0	5	11.5	4	14.0	0.92	0.32	0.29	0.34	107	118	130	
	28'-5"	13	15	11	6	7.5	5	6.5	6	7.0	5	7.0	0	5	11.5	4	14.0	0.91	0.32	0.30	0.33	107	119	131	
	30'-1"	13	15	12	6	7.5	5	7.0	6	7.0	5	7.0	0	5	11.5	4	14.0	0.91	0.32	0.30	0.34	108	119	131	
	31'-8"	14	16	12	6	7.5	5	6.5	6	7.0	5	7.0	0	5	11.5	4	14.0	0.91	0.32	0.30	0.33	108	121	133	

	DESIGN FILL	MEMBER THICKNESSES			SPAN (S) = 8 ft; HT (ft) = 10 or 11																							
					TOP SLAB BARS				BOTTOM SLAB BARS				WALL BARS					COEFFICIENTS (see note)				"C" Multiplier	"K" Multiplier		
		TS	BS	TX	A1	Bars	J3	Bars	A2	Bars	J4	Bars	B2 Bars			F	Bars	J4		J3		S = 8 ft	HT = 10 ft	HT = 11 ft	
	(ft-in)	Thick	Thick.	Thick	Size	c to c	Size	c to c	Size	c to c	Size	c to c	G1	Size	c to c	Size	c to c	K3	C4	K2	C1	in	in	in	
HS20	0'-9"	11	10	9	5	6.0	4	7.5	6	7.5	4	6.0	12	5	11.5	4	14.0	0.94	0.64	0.21	0.61	105	136	148	
	2'-7"	8	10	9	5	6.5	4	6.0	6	7.0	4	6.0	12	5	11.0	4	14.0	0.96	0.64	0.20	0.61	105	133	145	
	4'-3"	8	9	9	5	9.0	4	7.0	5	6.5	5	8.5	0	5	11.5	4	14.0	0.96	0.51	0.20	0.55	105	132	144	
	5'-11"	8	9	9	4	6.0	4	6.5	5	6.5	5	7.0	0	5	11.5	4	14.0	0.96	0.47	0.20	0.48	105	132	144	
	7'-6"	8	9	9	5	9.0	4	6.0	5	6.0	5	7.0	0	5	11.5	4	14.0	0.96	0.44	0.20	0.44	105	132	144	
HS20 MOD	0'-8"	12	10	9	6	7.5	4	7.5	6	6.5	5	8.5	12	5	11.5	4	14.0	0.93	0.66	0.22	0.61	105	137	149	
	2'-6"	9	11	9	6	8.5	5	9.0	6	7.0	4	6.0	12	5	11.5	4	14.0	0.95	0.64	0.21	0.63	105	135	147	
	4'-3"	8	10	9	5	8.0	4	6.5	5	6.0	4	6.0	0	5	11.5	4	14.0	0.96	0.55	0.20	0.54	105	133	145	
	5'-11"	8	10	9	5	8.5	4	6.5	5	6.0	5	8.5	0	5	11.5	4	14.0	0.96	0.50	0.20	0.48	105	133	145	
	7'-6"	8	10	9	5	8.5	5	9.0	5	6.5	5	7.5	0	5	11.5	4	14.0	0.96	0.47	0.21	0.45	105	133	145	
HS20 MOD or HS20	9'-2"	8	9	9	4	7.0	5	9.0	5	7.0	5	6.5	0	5	11.0	4	14.0	0.96	0.43	0.21	0.43	105	132	144	
	10'-10"	8	10	9	5	9.0	5	8.0	5	7.0	5	7.0	0	5	10.0	4	14.0	0.96	0.43	0.21	0.42	105	133	145	
	12'-5"	8	10	10	5	8.0	5	7.0	5	6.5	5	6.5	0	5	11.0	4	14.0	0.96	0.41	0.23	0.40	106	133	145	
	14'-1"	8	11	10	5	7.0	5	7.0	5	6.5	5	7.0	0	5	10.0	4	14.0	0.96	0.41	0.23	0.40	106	134	146	
	15'-8"	9	11	10	5	7.0	5	7.0	5	6.0	5	6.5	0	5	9.5	4	14.0	0.95	0.41	0.23	0.40	106	135	147	
	17'-3"	10	12	11	5	7.0	5	7.0	5	6.0	5	7.0	0	5	10.5	4	14.0	0.94	0.40	0.24	0.40	107	137	149	
	18'-10"	10	12	11	5	7.0	5	7.0	6	8.0	5	6.5	0	5	9.5	4	14.0	0.94	0.40	0.24	0.40	107	137	149	
	20'-5"	11	13	12	5	7.0	5	7.0	6	8.5	5	7.0	0	5	10.5	4	14.0	0.94	0.39	0.24	0.39	108	139	151	
	22'-1"	11	13	12	5	6.5	5	7.0	6	8.0	5	6.5	0	5	10.0	4	14.0	0.94	0.39	0.24	0.39	108	139	151	
	23'-8"	11	14	12	5	6.0	5	6.5	6	8.0	5	6.0	0	5	9.0	4	14.0	0.94	0.39	0.24	0.39	108	140	152	
	25'-3"	12	14	13	5	6.0	5	7.0	6	7.5	5	6.5	0	5	10.0	4	14.0	0.93	0.39	0.24	0.39	109	141	153	
	26'-11"	12	15	13	5	6.0	5	6.5	6	7.5	5	6.0	0	5	9.0	4	14.0	0.93	0.39	0.24	0.39	109	142	154	
	28'-5"	13	15	13	6	8.5	5	6.0	6	7.0	6	8.5	0	5	9.0	4	14.0	0.93	0.41	0.25	0.39	109	143	155	
	30'-1"	13	16	14	6	8.5	5	6.5	6	7.0	5	6.5	0	5	9.5	4	14.0	0.93	0.38	0.25	0.39	110	144	156	
	31'-8"	14	16	14	6	8.0	5	6.0	6	7.0	5	6.0	0	5	9.0	4	14.0	0.92	0.38	0.25	0.39	110	145	157	

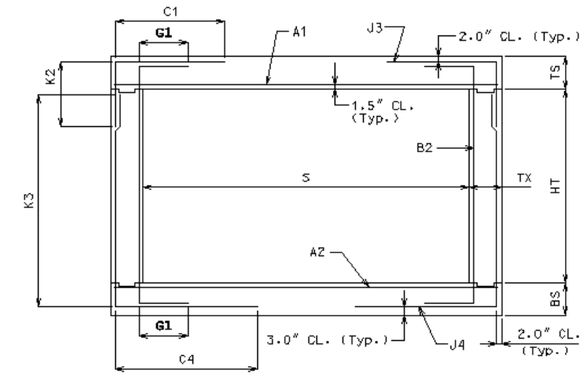

SECTION THRU BOX

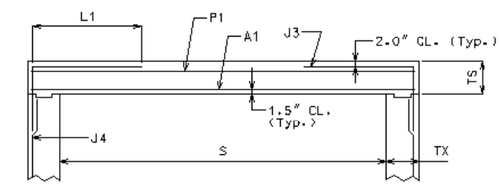

PART SECTION THRU BOX FOR MODIFIED J3 ALTERNATIVE
(B2 BAR NOT SHOWN FOR CLARITY)

NOTE: IF DESIGN FILL FALLS BETWEEN TABULATED FILLS, USE THE ADJACENT TABULATED FILL WHICH YIELDS THE GREATER MEMBER THICKNESS. IF THE MEMBER THICKNESSES ARE EQUAL, USE THE ADJACENT TABULATED FILL WHICH YIELDS THE GREATER AREA OF REINFORCEMENT.

SPECIAL DESIGNS ARE REQUIRED WHEN THE DESIGN FILL IS OUTSIDE THE RANGE OF TABULATED FILLS.

ALL DIMENSIONS ARE IN inch UNLESS OTHERWISE SPECIFIED.

COEFFICIENTS: DIMENSIONS MARKED WITH C# OR K# ARE THE PRODUCT OF THE COEFFICIENT AND ITS ASSOCIATED MULTIPLIER.

DESIGN FILL HEIGHT GIVEN IN THE TABLES IS THE HEIGHT FROM THE TOP OF THE EARTH FILL OR ROADWAY TO THE TOP OF THE TOP SLAB.

ALL CULVERTS MEET STRENGTH REQUIREMENTS FOR MILITARY 24 kips TANDEM AXLE LOADING.

AT CONTRACTOR'S OPTION, A MODIFIED J3 ALTERNATIVE MAY BE UTILIZED WHEN THE DISTANCE BETWEEN THE ENDS OF J3 BARS AT TOP SLAB IS LESS THAN 2'-0". J3 BARS WITH HORIZONTAL LENGTH L1 (Instead of C1) MUST BE USED, WHERE L1 IS EQUAL TO 18", 22", AND 28" FOR #4, #5, AND #6 BARS, RESPECTIVELY. ADDITIONAL P1 BAR IS REQUIRED WITH THE MODIFIED J3 ALTERNATIVE AND MUST BE OF THE SAME SIZE AND SPACING AS J3 BAR WITH A LENGTH EQUAL TO A1 BAR. NO ADDITIONAL PAYMENT WILL BE MADE FOR THIS SUBSTITUTION.

MISSOURI HIGHWAY AND TRANSPORTATION COMMISSION

CONCRETE SINGLE BOX CULVERT

MEMBER SIZES AND REINFORCEMENT

(HS20 & HS20 MOD. LOADING)

DATE: | EFFECTIVE: 04-01-2002 | 703.15C | 5/13

Span (S) = 9 ft; HT (ft) = 6 or 7 or 8

	DESIGN FILL (ft-in)	MEMBER THICKNESSES TS Thick	BS Thick.	TX Thick	TOP SLAB BARS A1 Size	A1 Bars c to c	J3 Size	J3 Bars c to c	BOTTOM SLAB BARS A2 Size	A2 Bars c to c	J4 Size	J4 Bars c to c	WALL BARS G1 Size	B2 Bars c to c	Size	F Bars c to c	COEFFICIENTS (see note) K3	J4 C4	K2	J3 C1	"C" Multiplier S = 9 ft in	"K" Multiplier HT = 6 ft in	HT = 7 ft in	HT = 8 ft in
HS20	0'-9"	11	9	8	6	8.0	4	8.5	6	7.0	5	8.5	12	5	11.5	4	14.0	0.91	0.36	0.33	0.45	116	87	99	111
HS20	2'-6"	9	10	8	6	8.5	5	9.0	6	7.0	4	6.5	12	5	11.5	4	14.0	0.93	0.32	0.36	0.34	116	86	98	110
HS20	4'-3"	8	9	8	5	7.0	4	6.5	6	8.0	4	6.5	0	5	11.5	4	14.0	0.94	0.30	0.31	0.32	116	84	96	108
HS20	5'-11"	8	9	8	5	7.0	4	6.0	6	8.0	4	6.0	0	5	11.5	4	14.0	0.94	0.29	0.31	0.31	116	84	96	108
HS20	7'-6"	8	10	8	5	7.0	5	9.0	6	8.5	4	6.5	0	5	11.5	4	14.0	0.94	0.28	0.36	0.31	116	85	97	109
HS20 MOD	0'-8"	12	10	8	6	7.0	4	8.0	6	6.5	5	8.5	12	5	11.5	4	14.0	0.91	0.36	0.34	0.47	116	89	101	113
HS20 MOD	2'-5"	10	11	8	6	7.0	5	8.5	6	6.5	4	7.0	12	5	11.5	4	14.0	0.92	0.32	0.37	0.34	116	88	100	112
HS20 MOD	4'-3"	8	10	8	5	6.5	5	9.0	6	8.0	4	7.0	0	5	11.5	4	14.0	0.94	0.30	0.36	0.32	116	85	97	109
HS20 MOD	5'-11"	8	10	8	5	7.0	5	9.0	6	8.0	4	6.5	0	5	11.5	4	14.0	0.94	0.29	0.36	0.32	116	85	97	109
HS20 MOD	7'-6"	8	10	8	5	6.5	5	8.5	6	8.0	4	6.0	0	5	11.5	4	14.0	0.94	0.28	0.36	0.31	116	85	97	109
HS20 or HS20 MOD	9'-2"	8	10	8	5	6.0	5	7.0	6	7.0	5	9.0	0	5	11.5	4	14.0	0.94	0.28	0.36	0.30	116	85	97	109
HS20 or HS20 MOD	10'-10"	8	10	8	5	7.0	5	7.5	6	8.5	5	9.0	0	5	11.5	4	14.0	0.94	0.27	0.36	0.30	116	85	97	109
HS20 or HS20 MOD	12'-4"	9	11	8	5	6.5	5	7.5	6	8.0	5	8.5	0	5	11.5	4	14.0	0.93	0.27	0.36	0.29	116	87	99	111
HS20 or HS20 MOD	14'-0"	9	11	8	6	8.5	5	7.0	6	7.0	5	7.5	0	5	11.5	4	14.0	0.93	0.26	0.36	0.29	116	87	99	111
HS20 or HS20 MOD	15'-7"	10	12	8	6	8.5	5	6.5	6	7.0	5	7.0	0	5	11.5	4	14.0	0.93	0.26	0.36	0.28	116	89	101	113
HS20 or HS20 MOD	17'-3"	10	12	8	6	7.0	6	8.5	6	6.5	5	7.0	0	5	11.5	4	14.0	0.93	0.25	0.36	0.30	116	89	101	113
HS20 or HS20 MOD	18'-9"	11	13	9	6	7.0	5	6.5	6	7.0	5	7.5	0	5	11.5	4	14.0	0.92	0.26	0.37	0.28	117	91	103	115
HS20 or HS20 MOD	20'-5"	11	14	9	6	7.0	6	8.5	6	6.0	5	7.5	0	5	11.5	4	14.0	0.92	0.25	0.37	0.28	117	92	104	116
HS20 or HS20 MOD	22'-0"	12	14	9	6	7.0	5	6.0	6	6.0	5	7.0	0	5	11.5	4	14.0	0.91	0.25	0.37	0.27	117	93	105	117
HS20 or HS20 MOD	23'-6"	13	15	9	6	7.0	5	6.0	6	6.5	5	7.0	0	5	11.5	4	14.0	0.90	0.25	0.37	0.27	117	95	107	119
HS20 or HS20 MOD	25'-2"	13	15	10	6	6.0	5	6.0	6	6.0	5	7.0	0	5	11.5	4	14.0	0.90	0.26	0.37	0.27	118	95	107	119
HS20 or HS20 MOD	26'-9"	14	16	10	6	6.5	5	6.0	6	6.0	5	7.0	0	5	11.5	4	14.0	0.90	0.25	0.37	0.27	118	97	109	121
HS20 or HS20 MOD	28'-4"	14	16	10	6	6.0	6	8.5	7	8.0	5	7.0	0	5	11.5	4	14.0	0.90	0.25	0.37	0.29	118	97	109	121
HS20 or HS20 MOD	29'-11"	15	17	11	6	6.0	5	6.5	7	8.0	5	7.0	0	5	11.5	4	14.0	0.89	0.26	0.38	0.32	119	99	111	123
HS20 or HS20 MOD	31'-7"	15	17	11	7	8.0	5	6.0	7	7.5	5	7.0	0	5	11.5	4	14.0	0.89	0.26	0.38	0.32	119	99	111	123

SPAN (S) = 9 ft; HT (ft) = 9 or 10

	DESIGN FILL (ft-in)	MEMBER THICKNESSES TS Thick	BS Thick.	TX Thick	TOP SLAB BARS A1 Size	A1 Bars c to c	J3 Size	J3 Bars c to c	BOTTOM SLAB BARS A2 Size	A2 Bars c to c	J4 Size	J4 Bars c to c	WALL BARS G1 Size	B2 Bars c to c	Size	F Bars c to c	COEFFICIENTS (see note) K3	J4 C4	K2	J3 C1	"C" Multiplier S = 9 ft in	"K" Multiplier HT = 9 ft in	HT = 10 ft in
HS20	0'-9"	11	10	9	6	8.0	4	7.0	6	7.0	4	6.0	12	5	11.5	4	14.0	0.93	0.47	0.23	0.60	117	124	136
HS20	2'-6"	9	11	9	5	6.0	5	9.0	6	7.0	4	6.5	12	5	11.5	4	14.0	0.95	0.42	0.23	0.45	117	123	135
HS20	4'-3"	8	10	9	5	7.5	4	6.5	5	6.0	4	6.5	0	5	11.5	4	14.0	0.95	0.37	0.21	0.38	117	121	133
HS20	5'-11"	8	10	9	5	7.5	4	6.0	5	6.0	4	6.0	0	5	11.5	4	14.0	0.95	0.35	0.21	0.36	117	121	133
HS20	7'-6"	8	10	9	5	7.0	5	9.0	6	8.5	5	8.5	0	5	11.5	4	14.0	0.95	0.34	0.23	0.35	117	121	133
HS20 MOD	0'-8"	12	10	9	6	7.0	4	7.0	6	6.0	5	8.0	12	5	11.5	4	14.0	0.92	0.46	0.24	0.60	117	125	137
HS20 MOD	2'-5"	10	11	9	6	7.0	5	8.5	6	6.5	4	6.0	12	5	11.5	4	14.0	0.94	0.41	0.26	0.49	117	124	136
HS20 MOD	4'-3"	8	10	9	5	7.0	4	6.0	6	7.5	4	6.0	0	5	11.5	4	14.0	0.95	0.37	0.21	0.38	117	121	133
HS20 MOD	5'-11"	8	10	9	5	7.0	5	9.0	6	8.0	5	9.0	0	5	11.5	4	14.0	0.95	0.36	0.23	0.36	117	121	133
HS20 MOD	7'-6"	8	10	9	5	7.0	5	8.5	6	7.5	5	8.5	0	5	11.5	4	14.0	0.95	0.34	0.25	0.35	117	121	133
HS20 or HS20 MOD	9'-2"	8	11	9	5	6.5	5	7.5	6	7.5	5	8.0	0	5	11.5	4	14.0	0.95	0.33	0.25	0.34	117	122	134
HS20 or HS20 MOD	10'-10"	8	11	9	5	7.0	5	7.5	6	8.5	5	7.5	0	5	11.5	4	14.0	0.95	0.33	0.25	0.34	117	122	134
HS20 or HS20 MOD	12'-4"	9	11	9	5	7.0	5	7.0	6	8.0	5	7.0	0	5	11.5	4	14.0	0.95	0.32	0.26	0.33	117	123	135
HS20 or HS20 MOD	14'-0"	9	11	9	5	6.0	5	6.5	6	7.0	5	6.5	0	5	11.5	4	14.0	0.95	0.32	0.26	0.33	117	123	135
HS20 or HS20 MOD	15'-7"	10	12	10	5	6.0	5	7.0	6	7.0	5	7.0	0	5	11.5	4	14.0	0.94	0.32	0.26	0.33	118	125	137
HS20 or HS20 MOD	17'-3"	10	13	10	6	7.5	5	6.0	6	7.0	5	6.5	0	5	11.5	4	14.0	0.94	0.31	0.26	0.33	118	126	138
HS20 or HS20 MOD	18'-9"	11	13	10	6	7.5	6	8.5	6	7.0	5	6.0	0	5	11.5	4	14.0	0.93	0.31	0.30	0.32	118	127	139
HS20 or HS20 MOD	20'-5"	11	14	11	6	7.5	5	6.0	6	7.0	5	7.0	0	5	11.5	4	14.0	0.93	0.31	0.26	0.33	119	128	140
HS20 or HS20 MOD	22'-0"	12	14	11	6	7.0	5	6.0	6	6.5	5	6.0	0	5	11.5	4	14.0	0.93	0.31	0.27	0.32	119	129	141
HS20 or HS20 MOD	23'-6"	13	15	11	6	7.0	6	8.5	6	6.5	5	6.0	0	5	11.5	4	14.0	0.92	0.31	0.28	0.34	119	131	143
HS20 or HS20 MOD	25'-2"	13	15	12	6	7.0	5	6.0	6	6.0	5	6.0	0	5	11.5	4	14.0	0.92	0.31	0.27	0.32	120	131	143
HS20 or HS20 MOD	26'-9"	14	16	12	6	7.0	5	6.0	6	6.5	5	6.0	0	5	11.5	4	14.0	0.92	0.31	0.27	0.32	120	133	145
HS20 or HS20 MOD	28'-4"	14	16	12	6	7.0	6	8.0	6	6.0	6	8.5	0	5	11.5	4	14.0	0.92	0.33	0.31	0.34	120	133	145
HS20 or HS20 MOD	29'-11"	15	17	13	6	7.0	5	6.0	6	6.0	5	6.0	0	5	11.5	4	14.0	0.91	0.31	0.28	0.36	121	135	147
HS20 or HS20 MOD	31'-7"	15	17	13	6	6.5	6	8.0	7	8.0	5	6.0	0	5	11.5	4	14.0	0.91	0.31	0.31	0.38	121	135	147

SPAN (S) = 9 ft; HT (ft) = 11 or 12

	DESIGN FILL (ft-in)	MEMBER THICKNESSES TS Thick	BS Thick.	TX Thick	TOP SLAB BARS A1 Size	A1 Bars c to c	J3 Size	J3 Bars c to c	BOTTOM SLAB BARS A2 Size	A2 Bars c to c	J4 Size	J4 Bars c to c	WALL BARS G1 Size	B2 Bars c to c	Size	F Bars c to c	COEFFICIENTS (see note) K3	J4 C4	K2	J3 C1	"C" Multiplier S = 9 ft in	"K" Multiplier HT = 11 ft in	HT = 12 ft in
HS20	0'-9"	11	10	10	6	7.5	4	7.0	6	7.0	5	9.0	12	5	11.5	4	14.0	0.94	0.65	0.20	0.60	118	148	160
HS20	2'-6"	9	11	10	5	6.0	5	8.5	6	7.0	5	9.0	12	5	11.5	4	14.0	0.95	0.65	0.21	0.62	118	147	159
HS20	4'-3"	8	10	10	5	7.5	5	9.0	6	8.5	5	7.5	0	5	11.5	4	14.0	0.96	0.48	0.19	0.48	118	145	157
HS20	5'-11"	8	10	10	5	7.5	5	8.5	6	8.5	5	7.0	0	5	11.5	4	14.0	0.96	0.44	0.21	0.43	118	145	157
HS20	7'-6"	8	10	10	5	7.0	5	7.0	6	8.0	5	6.5	0	5	11.0	4	14.0	0.96	0.42	0.21	0.41	118	145	157
HS20 MOD	0'-8"	12	11	10	6	7.0	4	6.5	6	6.0	5	7.5	12	5	11.5	4	14.0	0.94	0.65	0.20	0.60	118	150	162
HS20 MOD	2'-5"	10	12	10	6	7.0	5	7.5	6	6.0	5	8.5	12	5	11.5	4	14.0	0.95	0.65	0.22	0.62	118	149	161
HS20 MOD	4'-3"	8	10	10	5	6.5	5	8.5	6	7.0	5	7.5	0	5	11.5	4	14.0	0.96	0.48	0.21	0.48	118	145	157
HS20 MOD	5'-11"	8	10	10	5	7.0	5	7.5	6	7.5	5	7.0	0	5	11.5	4	14.0	0.96	0.44	0.21	0.43	118	145	157
HS20 MOD	7'-6"	8	10	10	5	7.0	5	7.0	6	7.5	5	6.5	0	5	11.0	4	14.0	0.96	0.42	0.21	0.41	118	145	157
HS20 or HS20 MOD	9'-2"	8	11	10	5	6.5	5	6.5	6	8.0	5	7.0	0	5	10.0	4	14.0	0.96	0.42	0.21	0.40	118	146	158
HS20 or HS20 MOD	10'-10"	8	11	10	5	7.0	5	6.5	5	6.0	5	6.5	0	5	9.5	4	14.0	0.96	0.41	0.21	0.39	118	146	158
HS20 or HS20 MOD	12'-4"	9	11	10	5	7.0	5	7.0	6	8.0	6	8.5	0	5	9.0	4	14.0	0.95	0.42	0.21	0.39	118	147	159
HS20 or HS20 MOD	14'-0"	9	12	11	5	6.5	5	6.5	6	8.0	5	6.5	0	5	9.5	4	14.0	0.95	0.39	0.21	0.38	119	148	160
HS20 or HS20 MOD	15'-7"	10	12	11	5	6.5	5	6.5	6	7.5	6	8.5	0	5	9.0	4	14.0	0.95	0.40	0.22	0.38	119	149	161
HS20 or HS20 MOD	17'-3"	10	13	12	5	6.0	5	6.0	6	7.5	5	6.0	0	5	9.5	4	14.0	0.95	0.38	0.22	0.37	120	150	162
HS20 or HS20 MOD	18'-9"	11	13	12	5	6.0	5	6.0	6	7.0	6	8.5	0	5	9.0	4	14.0	0.94	0.40	0.22	0.38	120	151	163
HS20 or HS20 MOD	20'-5"	11	14	13	6	8.5	5	6.0	6	7.0	5	6.5	0	5	9.5	4	14.0	0.94	0.37	0.22	0.37	121	152	164
HS20 or HS20 MOD	22'-0"	12	15	13	6	8.0	5	6.0	6	7.0	6	8.5	0	5	9.0	4	14.0	0.94	0.39	0.23	0.37	121	154	166
HS20 or HS20 MOD	23'-6"	13	15	13	6	8.0	6	8.5	6	7.0	6	8.0	0	5	9.0	4	14.0	0.93	0.39	0.26	0.40	121	155	167
HS20 or HS20 MOD	25'-2"	13	16	14	6	7.5	5	6.0	6	7.0	6	8.5	0	5	9.0	4	14.0	0.93	0.39	0.23	0.37	122	156	168
HS20 or HS20 MOD	26'-9"	14	16	14	6	7.5	6	8.5	6	6.5	6	8.0	0	5	9.0	4	14.0	0.93	0.39	0.26	0.39	122	157	169
HS20 or HS20 MOD	28'-4"	14	17	14	6	7.0	6	8.0	6	6.0	6	7.5	0	5	8.5	4	14.0	0.93	0.39	0.26	0.39	122	158	170
HS20 or HS20 MOD	29'-11"	15	17	15	6	7.0	6	8.5	6	6.5	6	8.0	0	5	9.0	4	14.0	0.92	0.38	0.26	0.43	123	159	171
HS20 or HS20 MOD	31'-7"	15	18	15	6	7.0	6	8.0	6	6.0	6	7.5	0	5	8.5	4	14.0	0.92	0.38	0.26	0.43	123	160	172

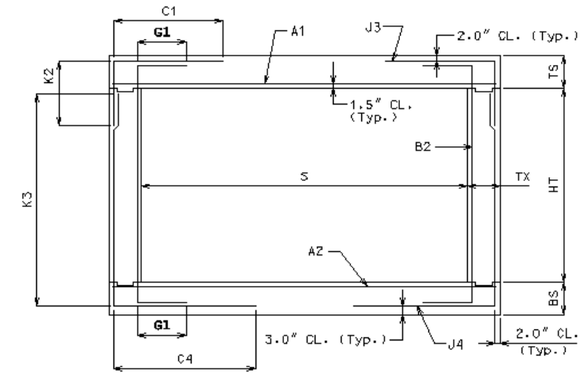

SECTION THRU BOX

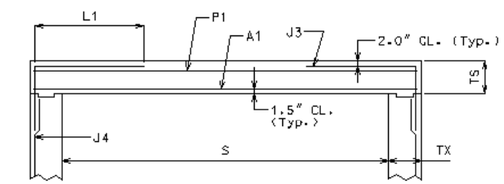

PART SECTION THRU BOX FOR MODIFIED J3 ALTERNATIVE
(B2 BAR NOT SHOWN FOR CLARITY)

NOTE: IF DESIGN FILL FALLS BETWEEN TABULATED FILLS, USE THE ADJACENT TABULATED FILL WHICH YIELDS THE GREATER MEMBER THICKNESS. IF THE MEMBER THICKNESSES ARE EQUAL, USE THE ADJACENT TABULATED FILL WHICH YIELDS THE GREATER AREA OF REINFORCEMENT.

SPECIAL DESIGNS ARE REQUIRED WHEN THE DESIGN FILL IS OUTSIDE THE RANGE OF TABULATED FILLS.

ALL DIMENSIONS ARE IN inch UNLESS OTHERWISE SPECIFIED.

COEFFICIENTS: DIMENSIONS MARKED WITH C# OR K# ARE THE PRODUCT OF THE COEFFICIENT AND ITS ASSOCIATED MULTIPLIER.

DESIGN FILL HEIGHT GIVEN IN THE TABLES IS THE HEIGHT FROM THE TOP OF THE EARTH FILL OR ROADWAY TO THE TOP OF THE TOP SLAB.

ALL CULVERTS MEET STRENGTH REQUIREMENTS FOR MILITARY 24 kips TANDEM AXLE LOADING.

AT CONTRACTOR'S OPTION, A MODIFIED J3 ALTERNATIVE MAY BE UTILIZED WHEN THE DISTANCE BETWEEN THE ENDS OF J3 BARS AT TOP SLAB IS LESS THAN 2'-0". J3 BARS WITH HORIZONTAL LENGTH L1 (Instead of C1) MUST BE USED, WHERE L1 IS EQUAL TO 18", 22", AND 28" FOR #4, #5, AND #6 BARS, RESPECTIVELY. ADDITIONAL P1 BAR IS REQUIRED WITH THE MODIFIED J3 ALTERNATIVE AND MUST BE OF THE SAME SIZE AND SPACING AS J3 BAR WITH A LENGTH EQUAL TO A1 BAR. NO ADDITIONAL PAYMENT WILL BE MADE FOR THIS SUBSTITUTION.

MISSOURI HIGHWAY AND TRANSPORTATION COMMISSION

CONCRETE SINGLE BOX CULVERT

MEMBER SIZES AND REINFORCEMENT

(HS20 & HS20 MOD. LOADING)

DATE: EFFECTIVE: 04-01-2002 **703.15C** 6/13

Span (S) = 10 ft

HT (ft) = 7 or 8 or 9

	DESIGN FILL	MEMBER THICKNESSES			TOP SLAB BARS				BOTTOM SLAB BARS				WALL BARS					COEFFICIENTS (see note)				"C" Multiplier	"K" Multiplier		
		TS	BS	TX	A1	Bars	J3	Bars	A2	Bars	J4	Bars		B2	Bars	F	Bars	J4		J3		S = 10 ft	HT = 7 ft	HT = 8 ft	HT = 9 ft
	(ft-in)	Thick	Thick.	Thick	Size	c to c	Size	c to c	Size	c to c	Size	c to c	G1	Size	c to c	Size	c to c	K3	C4	K2	C1	in	in	in	in
HS20	0'-9"	11	10	9	6	7.0	4	7.0	6	6.5	5	7.5	12	5	11.5	4	14.0	0.92	0.36	0.29	0.45	129	100	112	124
	2'-6"	9	11	9	6	7.0	5	7.0	6	7.0	4	6.5	12	5	11.5	4	14.0	0.94	0.32	0.32	0.34	129	99	111	123
	4'-2"	9	10	9	5	7.0	4	6.0	6	7.5	4	6.0	0	5	11.5	4	14.0	0.94	0.30	0.27	0.31	129	98	110	122
	5'-10"	9	10	9	5	6.5	5	9.0	6	7.0	5	9.0	0	5	11.5	4	14.0	0.94	0.29	0.32	0.30	129	98	110	122
	7'-5"	9	10	9	5	6.0	5	8.0	6	7.0	5	8.0	0	5	11.5	4	14.0	0.94	0.29	0.32	0.30	129	98	110	122
HS20 MOD	0'-8"	12	10	9	6	6.5	4	7.0	7	8.0	5	7.0	12	5	11.5	4	14.0	0.92	0.36	0.30	0.47	129	101	113	125
	2'-4"	11	12	9	6	6.5	5	7.5	6	6.0	4	6.5	12	5	11.5	4	14.0	0.93	0.32	0.33	0.34	129	102	114	126
	4'-2"	9	11	9	6	8.5	5	8.5	6	6.5	5	9.0	0	5	11.5	4	14.0	0.94	0.30	0.32	0.32	129	99	111	123
	5'-10"	9	10	9	5	6.0	5	8.5	6	7.0	5	8.5	0	5	11.5	4	14.0	0.94	0.29	0.32	0.31	129	98	110	122
	7'-5"	9	11	9	5	6.0	5	7.0	6	7.0	5	9.0	0	5	11.5	4	14.0	0.94	0.28	0.32	0.30	129	99	111	123
HS20 or HS20 MOD	9'-1"	9	11	9	6	8.0	5	7.0	6	7.0	5	8.0	0	5	11.5	4	14.0	0.94	0.27	0.32	0.30	129	99	111	123
	10'-9"	9	11	9	5	6.0	5	7.0	6	7.5	5	8.0	0	5	11.5	4	14.0	0.94	0.27	0.32	0.29	129	99	111	123
	12'-4"	9	11	9	6	7.5	5	6.0	6	6.5	5	7.0	0	5	11.5	4	14.0	0.94	0.27	0.32	0.29	129	99	111	123
	13'-11"	10	12	9	6	7.0	5	6.0	6	6.5	5	7.0	0	5	11.5	4	14.0	0.93	0.26	0.32	0.28	129	101	113	125
	15'-6"	11	13	9	6	7.0	6	8.5	6	6.0	5	7.0	0	5	11.5	4	14.0	0.93	0.25	0.33	0.27	129	103	115	127
	17'-2"	11	13	9	6	6.5	6	7.5	7	8.0	5	6.0	0	5	11.5	4	14.0	0.93	0.25	0.37	0.29	129	103	115	127
	18'-8"	12	14	9	6	6.5	6	8.0	7	8.0	5	6.0	0	5	11.5	4	14.0	0.92	0.25	0.37	0.28	129	105	117	129
	20'-4"	12	15	10	7	8.0	6	7.5	7	7.0	5	7.0	0	5	11.5	4	14.0	0.92	0.25	0.37	0.29	130	106	118	130
	21'-11"	13	15	10	7	8.0	6	8.0	7	7.5	5	6.0	0	5	11.5	4	14.0	0.91	0.25	0.37	0.28	130	107	119	131
	23'-5"	14	16	10	6	6.0	6	8.0	7	7.5	5	6.0	0	5	11.5	4	14.0	0.91	0.24	0.34	0.28	130	109	121	133
	25'-1"	14	16	11	7	7.5	6	8.0	7	7.0	5	6.0	0	5	11.5	4	14.0	0.91	0.25	0.37	0.29	131	109	121	133
	26'-8"	15	17	11	7	7.5	6	8.0	7	7.0	5	6.0	0	5	11.5	4	14.0	0.90	0.25	0.34	0.32	131	111	123	135
	28'-3"	15	17	11	7	7.0	6	7.5	7	7.0	6	8.5	0	5	11.5	4	14.0	0.90	0.27	0.38	0.32	131	111	123	135
	29'-10"	16	18	11	7	7.0	6	7.5	7	7.0	6	8.5	0	5	11.5	4	14.0	0.90	0.26	0.34	0.31	131	113	125	137
	31'-6"	16	19	12	7	7.0	6	7.5	7	6.5	5	6.5	0	5	11.5	4	14.0	0.90	0.25	0.38	0.32	132	114	126	138

SPAN (S) = 10 ft

HT (ft) = 10 or 11

	DESIGN FILL	MEMBER THICKNESSES			TOP SLAB BARS				BOTTOM SLAB BARS				WALL BARS					COEFFICIENTS (see note)				"C" Multiplier	"K" Multiplier	
		TS	BS	TX	A1	Bars	J3	Bars	A2	Bars	J4	Bars		B2	Bars	F	Bars	J4		J3		S = 10 ft	HT = 10 ft	HT = 11 ft
	(ft-in)	Thick	Thick.	Thick	Size	c to c	Size	c to c	Size	c to c	Size	c to c	G1	Size	c to c	Size	c to c	K3	C4	K2	C1	in	in	in
HS20	0'-9"	11	10	9	6	7.0	4	6.0	6	6.5	5	8.0	12	5	11.5	4	14.0	0.94	0.48	0.21	0.59	129	136	148
	2'-6"	9	11	9	6	7.0	5	7.0	6	6.5	5	8.5	12	5	11.5	4	14.0	0.95	0.42	0.23	0.45	129	135	147
	4'-2"	9	10	9	5	6.5	5	8.5	6	7.0	5	7.5	0	5	11.5	4	14.0	0.95	0.37	0.22	0.39	129	134	146
	5'-10"	9	10	9	5	6.5	5	8.5	6	7.0	5	7.0	0	5	11.5	4	14.0	0.95	0.35	0.23	0.36	129	134	146
	7'-5"	9	11	9	5	6.5	5	7.0	6	7.0	5	7.0	0	5	11.5	4	14.0	0.95	0.34	0.23	0.34	129	135	147
HS20 MOD	0'-8"	12	11	9	6	6.0	5	9.0	6	6.0	5	7.5	12	5	11.5	4	14.0	0.93	0.51	0.23	0.61	129	138	150
	2'-4"	11	12	9	6	6.5	5	7.0	7	8.0	5	8.5	12	5	11.5	4	14.0	0.94	0.42	0.24	0.52	129	138	150
	4'-2"	9	11	9	6	8.5	5	7.5	6	6.5	5	7.5	0	5	11.5	4	14.0	0.95	0.38	0.23	0.39	129	135	147
	5'-10"	9	11	9	5	6.0	5	7.5	6	7.0	5	7.0	0	5	11.5	4	14.0	0.95	0.35	0.23	0.36	129	135	147
	7'-5"	9	11	9	5	6.0	5	7.0	6	7.0	5	7.0	0	5	11.5	4	14.0	0.95	0.34	0.23	0.34	129	135	147
HS20 or HS20 MOD	9'-1"	9	11	9	6	8.0	5	6.5	6	6.5	5	6.0	0	5	11.5	4	14.0	0.95	0.32	0.23	0.33	129	135	147
	10'-9"	9	11	9	5	6.5	5	6.5	6	7.0	5	6.0	0	5	11.5	4	14.0	0.95	0.32	0.23	0.32	129	135	147
	12'-4"	9	12	10	6	8.0	5	6.0	6	6.5	5	6.5	0	5	11.5	4	14.0	0.95	0.31	0.23	0.32	130	136	148
	13'-11"	10	12	10	6	7.5	6	8.5	6	6.5	6	8.5	0	5	11.5	4	14.0	0.94	0.33	0.27	0.32	130	137	149
	15'-6"	11	13	10	6	8.0	6	8.0	6	6.5	6	8.0	0	5	11.5	4	14.0	0.94	0.32	0.25	0.33	130	139	151
	17'-2"	11	14	11	6	7.0	6	8.0	6	6.0	5	6.0	0	5	11.5	4	14.0	0.94	0.30	0.27	0.34	131	140	152
	18'-8"	12	14	11	6	7.0	6	8.0	6	6.0	6	8.0	0	5	11.5	4	14.0	0.93	0.32	0.28	0.33	131	141	153
	20'-4"	12	15	12	6	7.0	6	8.0	6	6.0	6	6.0	0	5	11.5	4	14.0	0.93	0.30	0.27	0.34	132	142	154
	21'-11"	13	15	12	6	6.5	6	8.0	7	8.0	6	8.0	0	5	11.5	4	14.0	0.93	0.32	0.28	0.33	132	143	155
	23'-5"	14	16	12	6	6.5	6	7.5	7	8.0	6	8.0	0	5	11.5	4	14.0	0.92	0.32	0.28	0.33	132	145	157
	25'-1"	14	17	13	6	6.5	6	8.0	7	8.0	6	8.5	0	5	11.5	4	14.0	0.92	0.32	0.28	0.33	133	146	158
	26'-8"	15	17	13	6	6.0	6	7.5	7	7.5	6	8.0	0	5	11.5	4	14.0	0.92	0.32	0.29	0.36	133	147	159
	28'-3"	15	18	13	6	6.0	6	7.0	7	7.5	6	7.5	0	5	11.5	4	14.0	0.92	0.31	0.28	0.36	133	148	160
	29'-10"	16	18	14	6	6.0	6	7.5	7	7.0	6	8.0	0	5	9.5	4	14.0	0.91	0.32	0.29	0.36	134	149	161
	31'-6"	16	19	14	7	8.0	6	7.0	7	7.0	6	8.0	0	5	11.5	4	14.0	0.91	0.32	0.29	0.36	134	150	162

SPAN (S) = 10 ft

HT (ft) = 12 or 13

	DESIGN FILL	MEMBER THICKNESSES			TOP SLAB BARS				BOTTOM SLAB BARS				WALL BARS					COEFFICIENTS (see note)				"C" Multiplier	"K" Multiplier	
		TS	BS	TX	A1	Bars	J3	Bars	A2	Bars	J4	Bars		B2	Bars	F	Bars	J4		J3		S = 10 ft	HT = 12 ft	HT = 13 ft
	(ft-in)	Thick	Thick.	Thick	Size	c to c	Size	c to c	Size	c to c	Size	c to c	G1	Size	c to c	Size	c to c	K3	C4	K2	C1	in	in	in
HS20	0'-9"	11	10	10	6	7.0	5	9.0	6	6.0	5	7.0	12	5	10.5	4	14.0	0.95	0.63	0.20	0.61	130	160	172
	2'-6"	9	11	10	6	7.0	5	7.0	6	6.0	5	7.0	12	5	9.0	4	14.0	0.96	0.63	0.20	0.61	130	159	171
	4'-2"	9	10	10	5	6.5	5	8.5	6	6.5	5	6.0	0	5	10.5	4	14.0	0.96	0.46	0.20	0.51	130	158	170
	5'-10"	9	10	10	5	7.0	5	7.5	6	7.0	6	8.0	0	5	9.5	4	14.0	0.96	0.44	0.20	0.44	130	158	170
	7'-5"	9	11	10	5	6.5	5	7.0	6	7.0	5	6.0	0	5	9.0	4	14.0	0.96	0.42	0.20	0.41	130	159	171
HS20 MOD	0'-8"	12	11	10	6	6.0	5	8.5	7	7.5	5	7.0	12	5	11.5	4	14.0	0.94	0.63	0.21	0.61	130	162	174
	2'-4"	11	12	10	6	6.5	5	7.0	7	7.5	5	7.0	12	5	11.5	4	14.0	0.95	0.63	0.21	0.61	130	162	174
	4'-2"	9	11	10	5	6.0	5	7.5	6	6.5	5	7.0	0	5	10.5	4	14.0	0.96	0.50	0.20	0.50	130	159	171
	5'-10"	9	11	10	5	6.5	5	7.0	6	7.0	5	6.5	0	5	9.5	4	14.0	0.96	0.45	0.20	0.44	130	159	171
	7'-5"	9	11	10	5	6.0	5	7.0	6	7.0	6	8.5	0	5	9.0	4	14.0	0.96	0.44	0.20	0.41	130	159	171
HS20 or HS20 MOD	9'-1"	9	12	10	6	8.5	5	6.0	6	6.5	6	8.0	0	5	8.5	4	14.0	0.96	0.43	0.20	0.39	130	160	172
	10'-9"	9	11	11	5	6.5	5	6.5	6	7.0	6	7.5	0	5	9.0	4	14.0	0.96	0.40	0.20	0.38	131	159	171
	12'-4"	9	12	11	5	6.0	6	8.0	6	7.0	6	8.0	0	5	8.5	4	14.0	0.96	0.40	0.21	0.39	131	160	172
	13'-11"	10	13	12	6	8.5	5	6.0	6	7.0	6	8.5	0	5	9.0	4	14.0	0.95	0.39	0.20	0.37	132	162	174
	15'-6"	11	13	12	6	8.5	5	6.0	6	7.0	6	8.0	0	5	9.0	4	14.0	0.95	0.39	0.21	0.37	132	163	175
	17'-2"	11	14	13	6	8.0	6	8.5	6	7.0	6	8.0	0	5	9.0	4	14.0	0.95	0.38	0.22	0.38	133	164	176
	18'-8"	12	15	13	6	7.5	6	8.5	6	6.0	6	7.5	0	5	9.0	4	14.0	0.94	0.38	0.24	0.38	133	166	178
	20'-4"	12	15	13	6	7.0	6	7.5	6	6.0	6	7.0	0	5	8.5	4	14.0	0.94	0.37	0.24	0.38	133	166	178
	21'-11"	13	16	14	6	7.0	6	8.0	6	6.0	6	7.5	0	5	9.0	4	14.0	0.94	0.37	0.24	0.38	134	168	180
	23'-5"	14	16	14	6	7.0	6	7.5	6	6.0	6	7.0	0	5	8.5	4	14.0	0.93	0.37	0.24	0.38	134	169	181
	25'-1"	14	17	15	6	7.0	6	8.0	6	6.0	6	7.0	0	5	9.0	4	14.0	0.93	0.37	0.24	0.37	135	170	182
	26'-8"	15	18	15	6	7.0	6	7.0	7	7.5	6	7.0	0	5	8.5	4	14.0	0.93	0.37	0.25	0.41	135	172	184
	28'-3"	15	18	16	6	6.5	6	7.0	7	7.5	6	7.0	0	5	9.0	4	14.0	0.93	0.36	0.24	0.41	136	172	184
	29'-10"	16	19	16	6	6.5	6	7.0	7	7.5	6	7.0	0	5	8.5	4	14.0	0.92	0.36	0.25	0.41	136	174	186
	31'-6"	16	19	16	6	6.0	6	7.0	7	7.5	6	7.0	0	5	7.5	4	14.0	0.92	0.36	0.25	0.41	136	174	186

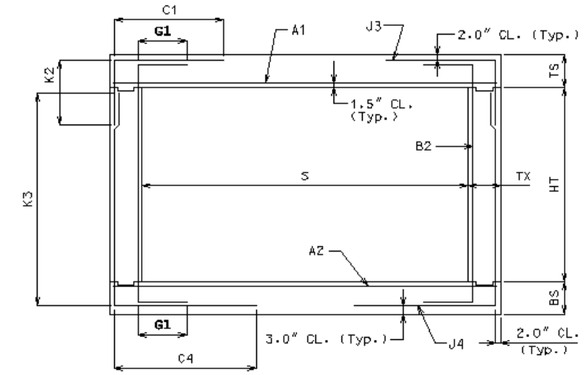

SECTION THRU BOX

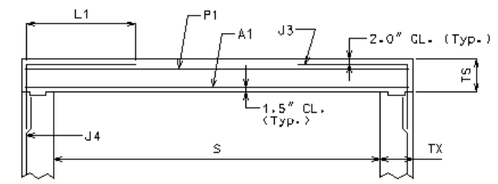

PART SECTION THRU BOX FOR MODIFIED J3 ALTERNATIVE

(B2 BAR NOT SHOWN FOR CLARITY)

NOTE: IF DESIGN FILL FALLS BETWEEN TABULATED FILLS, USE THE ADJACENT TABULATED FILL WHICH YIELDS THE GREATER MEMBER THICKNESS. IF THE MEMBER THICKNESSES ARE EQUAL, USE THE ADJACENT TABULATED FILL WHICH YIELDS THE GREATER AREA OF REINFORCEMENT.

SPECIAL DESIGNS ARE REQUIRED WHEN THE DESIGN FILL IS OUTSIDE THE RANGE OF TABULATED FILLS.

ALL DIMENSIONS ARE IN inch UNLESS OTHERWISE SPECIFIED

COEFFICIENTS: DIMENSIONS MARKED WITH C# OR K# ARE THE PRODUCT OF THE COEFFICIENT AND ITS ASSOCIATED MULTIPLIER.

DESIGN FILL HEIGHT GIVEN IN THE TABLES IS THE HEIGHT FROM THE TOP OF THE EARTH FILL OR ROADWAY TO THE TOP OF THE TOP SLAB.

ALL CULVERTS MEET STRENGTH REQUIREMENTS FOR MILITARY 24 kips TANDEM AXLE LOADING.

AT CONTRACTOR'S OPTION, A MODIFIED J3 ALTERNATIVE MAY BE UTILIZED WHEN THE DISTANCE BETWEEN THE ENDS OF J3 BARS AT TOP SLAB IS LESS THAN 2'-0". J3 BARS WITH HORIZONTAL LENGTH L1 (Instead of C1) MUST BE USED, WHERE L1 IS EQUAL TO 18", 22", AND 28" FOR #4, #5, AND #6 BARS, RESPECTIVELY. ADDITIONAL P1 BAR IS REQUIRED WITH THE MODIFIED J3 ALTERNATIVE AND MUST BE OF THE SAME SIZE AND SPACING AS J3 BAR WITH A LENGTH EQUAL TO A1 BAR. NO ADDITIONAL PAYMEN1 WILL BE MADE FOR THIS SUBSTITUTION.

MISSOURI HIGHWAY AND TRANSPORTATION COMMISSION

CONCRETE SINGLE BOX CULVERT

MEMBER SIZES AND REINFORCEMENT

(HS20 & HS20 MOD. LOADING)

DATE:	EFFECTIVE: 04-01-2002	703.15C	7/13

Span (S) = 11 ft

HT (ft)= 8 or 9 or 10

	DESIGN FILL	MEMBER THICKNESS TS	MEMBER THICKNESS BS	MEMBER THICKNESS TX	TOP SLAB BARS A1 Size	TOP SLAB BARS A1 Bars c to c	TOP SLAB BARS J3 Size	TOP SLAB BARS J3 Bars c to c	BOTTOM SLAB BARS A2 Size	BOTTOM SLAB BARS A2 Bars c to c	BOTTOM SLAB BARS J4 Size	BOTTOM SLAB BARS J4 Bars c to c	WALL BARS B2 Bars G1 Size	WALL BARS B2 Bars c to c	WALL BARS B2 Bars Size	WALL BARS B2 Bars c to c	WALL BARS F Bars Size	WALL BARS F Bars c to c	COEFFICIENTS (see note) J4 K3	COEFFICIENTS (see note) J4 C4	COEFFICIENTS (see note) J3 K2	COEFFICIENTS (see note) J3 C1	"C" Multiplier S = 11 ft	"K" Multiplier HT = 8 ft	"K" Multiplier HT = 9 ft	"K" Multiplier HT = 10 ft
	(ft-in)	Thick	Thick.	Thick																			in	in	in	in
HS20	0'-9"	11	10	9	6	6.5	5	9.0	6	6.0	5	7.5	12	5	11.5	4	14.0	0.93	0.36	0.30	0.49	141	112	124	136
HS20	2'-5"	10	11	9	6	6.5	5	7.0	6	6.0	5	8.0	12	5	11.5	4	14.0	0.94	0.32	0.29	0.34	141	112	124	136
HS20	4'-2"	9	11	9	6	8.0	5	7.5	6	6.5	5	7.5	0	5	11.5	4	14.0	0.95	0.30	0.28	0.31	141	111	123	135
HS20	5'-10"	9	11	9	6	8.0	5	7.0	6	6.0	5	7.5	0	5	11.5	4	14.0	0.95	0.28	0.28	0.30	141	111	123	135
HS20	7'-5"	9	11	9	6	7.5	5	6.5	6	6.5	5	7.0	0	5	11.5	4	14.0	0.95	0.28	0.28	0.29	141	111	123	135
HS20 MOD	0'-7"	13	11	9	6	6.0	4	6.5	7	7.0	5	6.0	12	5	11.5	4	14.0	0.92	0.37	0.27	0.60	141	115	127	139
HS20 MOD	2'-4"	11	12	9	7	7.5	5	6.5	7	7.5	5	8.0	12	5	11.5	4	14.0	0.93	0.32	0.29	0.35	141	114	126	138
HS20 MOD	4'-2"	9	11	9	6	7.0	5	7.0	6	6.0	5	7.5	0	5	11.5	4	14.0	0.95	0.30	0.28	0.31	141	111	123	135
HS20 MOD	5'-10"	9	11	9	6	7.0	5	6.5	6	6.0	5	7.0	0	5	11.5	4	14.0	0.95	0.28	0.28	0.30	141	111	123	135
HS20 MOD	7'-5"	9	11	9	6	7.0	5	6.0	6	6.0	5	7.0	0	5	11.5	4	14.0	0.95	0.28	0.28	0.29	141	111	123	135
HS20 or HS20 MOD	9'-0"	10	12	9	6	7.0	5	6.0	6	6.0	5	7.0	0	5	11.5	4	14.0	0.94	0.27	0.29	0.28	141	113	125	137
HS20 or HS20 MOD	10'-8"	10	12	9	6	6.5	6	8.0	7	7.5	5	6.0	0	5	11.5	4	14.0	0.94	0.26	0.33	0.30	141	113	125	137
HS20 or HS20 MOD	12'-3"	10	12	9	6	7.0	6	8.0	6	6.0	5	6.0	0	5	11.5	4	14.0	0.94	0.26	0.33	0.29	141	113	125	137
HS20 or HS20 MOD	13'-10"	11	13	9	6	6.5	6	7.5	7	8.0	6	8.0	0	5	11.5	4	14.0	0.93	0.27	0.33	0.29	141	115	127	139
HS20 or HS20 MOD	15'-6"	11	14	10	7	8.0	6	7.0	7	7.0	5	6.0	0	5	11.5	4	14.0	0.93	0.25	0.33	0.29	142	116	128	140
HS20 or HS20 MOD	17'-1"	12	14	10	7	8.0	6	7.0	7	7.0	6	8.0	0	5	11.5	4	14.0	0.93	0.27	0.33	0.28	142	117	129	141
HS20 or HS20 MOD	18'-7"	13	15	10	7	8.0	6	7.0	7	7.0	6	8.0	0	5	11.5	4	14.0	0.92	0.26	0.33	0.28	142	119	131	143
HS20 or HS20 MOD	20'-3"	13	16	10	7	7.0	6	7.0	7	7.0	6	8.0	0	5	11.5	4	14.0	0.92	0.26	0.33	0.28	142	120	132	144
HS20 or HS20 MOD	21'-10"	14	16	11	7	7.0	6	7.0	7	7.0	6	8.0	0	5	11.5	4	14.0	0.92	0.26	0.34	0.28	143	121	133	145
HS20 or HS20 MOD	23'-4"	15	17	11	7	7.0	6	7.0	7	7.0	6	8.0	0	5	11.5	4	14.0	0.91	0.26	0.34	0.31	143	123	135	147
HS20 or HS20 MOD	25'-0"	15	18	12	7	7.0	6	7.0	7	6.5	6	8.5	0	5	11.5	4	14.0	0.91	0.26	0.34	0.32	144	124	136	148
HS20 or HS20 MOD	26'-7"	16	18	12	7	7.0	6	7.0	7	6.5	6	8.0	0	5	11.5	4	14.0	0.90	0.26	0.34	0.31	144	125	137	149
HS20 or HS20 MOD	28'-1"	17	19	12	7	7.0	6	7.0	7	6.5	6	8.0	0	5	11.5	4	14.0	0.90	0.26	0.35	0.31	144	127	139	151
HS20 or HS20 MOD	29'-9"	17	19	13	7	6.5	6	7.0	7	6.0	6	8.0	0	5	11.5	4	14.0	0.90	0.27	0.35	0.31	145	127	139	151
HS20 or HS20 MOD	31'-4"	18	20	13	7	6.5	6	7.0	7	6.0	6	8.0	0	5	11.5	4	14.0	0.89	0.26	0.35	0.31	145	129	141	153

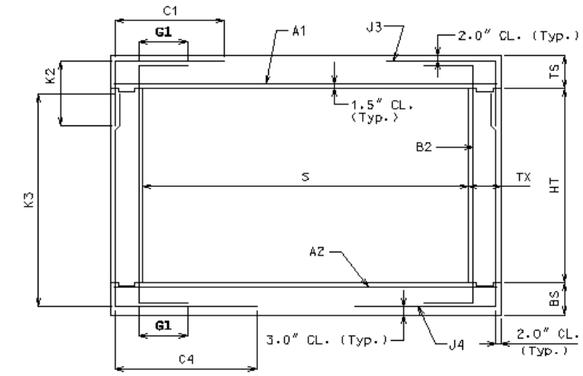

SECTION THRU BOX

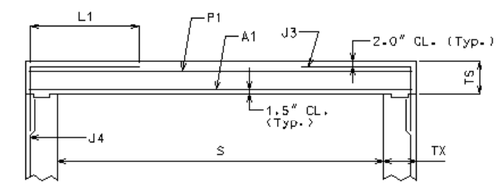

PART SECTION THRU BOX FOR MODIFIED J3 ALTERNATIVE

(B2 BAR NOT SHOWN FOR CLARITY)

SPAN (S) = 11 ft

HT (ft)= 11 or 12

	DESIGN FILL	MEMBER THICKNESS TS	MEMBER THICKNESS BS	MEMBER THICKNESS TX	TOP SLAB BARS A1 Size	TOP SLAB BARS A1 Bars c to c	TOP SLAB BARS J3 Size	TOP SLAB BARS J3 Bars c to c	BOTTOM SLAB BARS A2 Size	BOTTOM SLAB BARS A2 Bars c to c	BOTTOM SLAB BARS J4 Size	BOTTOM SLAB BARS J4 Bars c to c	WALL BARS B2 Bars G1 Size	WALL BARS B2 Bars c to c	WALL BARS B2 Bars Size	WALL BARS B2 Bars c to c	WALL BARS F Bars Size	WALL BARS F Bars c to c	COEFFICIENTS (see note) J4 K3	COEFFICIENTS (see note) J4 C4	COEFFICIENTS (see note) J3 K2	COEFFICIENTS (see note) J3 C1	"C" Multiplier S = 11 ft	"K" Multiplier HT = 11 ft	"K" Multiplier HT = 12 ft
	(ft-in)	Thick	Thick.	Thick																			in	in	in
HS20	0'-9"	11	10	10	6	6.5	5	8.5	7	8.0	5	7.0	12	5	11.5	4	14.0	0.94	0.44	0.23	0.60	142	148	160
HS20	2'-5"	10	11	10	6	6.0	5	7.0	7	7.5	5	7.0	12	5	11.5	4	14.0	0.95	0.40	0.22	0.45	142	148	160
HS20	4'-2"	9	11	10	6	8.0	5	7.0	6	6.5	5	7.0	0	5	11.5	4	14.0	0.95	0.36	0.21	0.37	142	147	159
HS20	5'-10"	9	11	10	6	8.0	5	7.0	6	6.5	5	7.0	0	5	11.5	4	14.0	0.95	0.34	0.21	0.35	142	147	159
HS20	7'-5"	9	11	10	6	7.5	5	6.5	6	6.0	5	6.0	0	5	11.5	4	14.0	0.95	0.33	0.21	0.33	142	147	159
HS20 MOD	0'-7"	13	11	10	6	6.0	5	9.0	7	7.5	5	7.0	12	5	11.5	4	14.0	0.93	0.46	0.22	0.60	142	151	163
HS20 MOD	2'-4"	11	12	10	7	7.5	5	6.5	7	7.0	5	7.0	12	5	11.5	4	14.0	0.94	0.40	0.22	0.48	142	150	162
HS20 MOD	4'-2"	9	11	10	6	7.0	5	7.0	7	8.0	5	7.0	0	5	11.5	4	14.0	0.95	0.36	0.21	0.37	142	147	159
HS20 MOD	5'-10"	9	11	10	6	7.0	5	6.5	6	6.0	5	6.5	0	5	11.5	4	14.0	0.95	0.34	0.21	0.35	142	147	159
HS20 MOD	7'-5"	9	12	10	6	7.0	5	6.0	7	8.0	5	6.0	0	5	11.5	4	14.0	0.95	0.33	0.21	0.33	142	148	160
HS20 or HS20 MOD	9'-0"	10	12	10	6	7.0	6	8.5	6	6.0	6	8.5	0	5	11.5	4	14.0	0.95	0.33	0.25	0.32	142	149	161
HS20 or HS20 MOD	10'-8"	10	13	10	6	6.5	6	7.5	7	7.5	6	7.5	0	5	11.5	4	14.0	0.95	0.33	0.25	0.34	142	150	162
HS20 or HS20 MOD	12'-3"	10	12	10	6	7.5	6	8.0	6	6.0	6	7.0	0	5	11.5	4	14.0	0.95	0.32	0.23	0.33	142	149	161
HS20 or HS20 MOD	13'-10"	11	13	11	6	7.0	6	8.0	6	6.0	6	8.0	0	5	11.5	4	14.0	0.94	0.32	0.25	0.33	143	151	163
HS20 or HS20 MOD	15'-6"	11	14	11	6	6.5	6	7.0	7	8.0	6	7.5	0	5	11.5	4	14.0	0.94	0.31	0.25	0.33	143	152	164
HS20 or HS20 MOD	17'-1"	12	15	12	6	6.5	6	7.5	7	7.5	6	8.0	0	5	11.5	4	14.0	0.94	0.31	0.25	0.33	144	154	166
HS20 or HS20 MOD	18'-7"	13	15	12	6	6.5	6	7.0	7	7.5	6	7.0	0	5	11.5	4	14.0	0.93	0.31	0.26	0.32	144	155	167
HS20 or HS20 MOD	20'-3"	13	16	12	6	6.0	6	7.0	7	7.0	6	7.0	0	5	11.0	4	14.0	0.93	0.31	0.26	0.32	144	156	168
HS20 or HS20 MOD	21'-10"	14	17	13	6	6.0	6	7.0	7	7.0	6	7.5	0	5	11.5	4	14.0	0.93	0.31	0.26	0.32	145	158	170
HS20 or HS20 MOD	23'-4"	15	17	13	7	8.0	6	7.0	7	7.0	6	7.0	0	5	11.0	4	14.0	0.92	0.31	0.26	0.35	145	159	171
HS20 or HS20 MOD	25'-0"	15	18	14	7	7.5	6	6.5	7	7.0	6	7.0	0	5	11.5	4	14.0	0.92	0.31	0.26	0.35	146	160	172
HS20 or HS20 MOD	26'-7"	16	19	14	7	7.5	6	7.0	7	7.0	6	7.0	0	5	11.0	4	14.0	0.92	0.30	0.27	0.35	146	162	174
HS20 or HS20 MOD	28'-1"	17	19	14	7	7.5	6	7.0	7	7.0	6	7.0	0	5	10.5	4	14.0	0.91	0.31	0.27	0.35	146	163	175
HS20 or HS20 MOD	29'-9"	17	20	15	7	7.0	6	7.0	7	6.5	6	7.0	0	5	11.0	4	14.0	0.91	0.31	0.27	0.35	147	164	176
HS20 or HS20 MOD	31'-4"	18	20	15	7	7.0	6	7.0	7	6.5	6	7.0	0	5	10.0	4	14.0	0.91	0.31	0.27	0.35	147	165	177

SPAN (S) = 11 ft

HT (ft)= 13 or 14

	DESIGN FILL	MEMBER THICKNESS TS	MEMBER THICKNESS BS	MEMBER THICKNESS TX	TOP SLAB BARS A1 Size	TOP SLAB BARS A1 Bars c to c	TOP SLAB BARS J3 Size	TOP SLAB BARS J3 Bars c to c	BOTTOM SLAB BARS A2 Size	BOTTOM SLAB BARS A2 Bars c to c	BOTTOM SLAB BARS J4 Size	BOTTOM SLAB BARS J4 Bars c to c	WALL BARS B2 Bars G1 Size	WALL BARS B2 Bars c to c	WALL BARS B2 Bars Size	WALL BARS B2 Bars c to c	WALL BARS F Bars Size	WALL BARS F Bars c to c	COEFFICIENTS (see note) J4 K3	COEFFICIENTS (see note) J4 C4	COEFFICIENTS (see note) J3 K2	COEFFICIENTS (see note) J3 C1	"C" Multiplier S = 11 ft	"K" Multiplier HT = 13 ft	"K" Multiplier HT = 14 ft
	(ft-in)	Thick	Thick.	Thick																			in	in	in
HS20	0'-9"	11	11	11	6	6.5	5	8.0	7	7.5	5	7.0	12	5	11.0	4	14.0	0.95	0.63	0.20	0.61	143	173	185
HS20	2'-5"	10	12	11	6	6.5	5	7.0	7	7.5	5	6.5	12	5	10.0	4	14.0	0.96	0.58	0.19	0.61	143	173	185
HS20	4'-2"	9	11	11	6	8.0	5	7.0	6	6.0	6	8.5	0	5	9.5	4	14.0	0.96	0.46	0.19	0.45	143	171	183
HS20	5'-10"	9	11	11	6	8.0	5	6.5	6	6.0	6	7.5	0	5	9.0	4	14.0	0.96	0.43	0.19	0.41	143	171	183
HS20	7'-5"	9	12	11	6	7.5	6	8.5	6	6.0	6	8.0	0	5	8.5	4	14.0	0.96	0.42	0.20	0.40	143	172	184
HS20 MOD	0'-7"	13	11	11	6	6.0	5	8.0	7	7.0	5	6.5	12	5	11.5	4	14.0	0.94	0.63	0.20	0.61	143	175	187
HS20 MOD	2'-4"	11	12	11	7	7.5	5	6.0	7	7.0	5	6.5	12	5	11.0	4	14.0	0.95	0.55	0.19	0.61	143	174	186
HS20 MOD	4'-2"	9	12	11	6	7.0	5	6.0	7	7.5	5	6.0	0	5	9.5	4	14.0	0.96	0.47	0.19	0.45	143	172	184
HS20 MOD	5'-10"	9	12	11	6	7.5	5	6.0	7	7.5	6	8.5	0	5	9.0	4	14.0	0.96	0.43	0.19	0.41	143	172	184
HS20 MOD	7'-5"	9	12	11	6	7.0	6	8.0	6	6.0	6	8.0	0	5	8.5	4	14.0	0.96	0.42	0.20	0.40	143	172	184
HS20 or HS20 MOD	9'-0"	10	12	11	6	7.5	6	8.0	7	8.0	6	7.0	0	5	8.5	4	14.0	0.96	0.40	0.21	0.38	143	173	185
HS20 or HS20 MOD	10'-8"	10	13	11	6	7.0	6	7.5	6	6.0	6	7.0	0	5	7.5	4	14.0	0.96	0.40	0.21	0.39	143	174	186
HS20 or HS20 MOD	12'-3"	10	13	12	6	7.5	6	8.0	6	6.0	6	7.5	0	5	8.5	4	14.0	0.96	0.38	0.21	0.38	144	174	186
HS20 or HS20 MOD	13'-10"	11	13	12	6	7.5	6	8.0	6	6.0	6	7.0	0	5	7.5	4	14.0	0.95	0.37	0.20	0.38	144	175	187
HS20 or HS20 MOD	15'-6"	11	14	13	6	7.0	6	7.0	6	6.0	6	7.0	0	5	8.5	4	14.0	0.95	0.37	0.22	0.37	145	176	188
HS20 or HS20 MOD	17'-1"	12	15	13	6	7.0	6	7.0	7	8.0	6	7.0	0	5	7.5	4	14.0	0.95	0.37	0.22	0.37	145	178	190
HS20 or HS20 MOD	18'-7"	13	16	14	6	7.0	6	7.5	7	7.5	6	7.0	0	5	8.5	4	14.0	0.94	0.36	0.22	0.37	146	180	192
HS20 or HS20 MOD	20'-3"	13	16	14	6	6.5	6	7.0	7	7.5	6	6.5	0	5	7.5	4	14.0	0.94	0.36	0.22	0.36	146	180	192
HS20 or HS20 MOD	21'-10"	14	17	15	6	6.5	6	7.0	7	7.5	6	7.0	0	5	8.5	4	14.0	0.94	0.35	0.23	0.36	147	182	194
HS20 or HS20 MOD	23'-4"	15	18	15	6	6.0	6	7.0	7	7.0	6	6.5	0	5	7.5	4	14.0	0.93	0.35	0.23	0.39	147	184	196
HS20 or HS20 MOD	25'-0"	15	18	16	6	6.0	6	7.0	7	7.0	6	7.0	0	5	8.5	4	14.0	0.93	0.35	0.23	0.39	148	184	196
HS20 or HS20 MOD	26'-7"	16	19	16	6	6.0	6	7.0	7	7.0	6	6.5	0	5	7.5	4	14.0	0.93	0.35	0.23	0.39	148	186	198
HS20 or HS20 MOD	28'-1"	17	20	17	6	6.0	6	7.0	7	7.0	6	7.0	0	5	8.0	4	14.0	0.92	0.35	0.24	0.39	149	188	200
HS20 or HS20 MOD	29'-9"	17	20	17	7	7.5	6	6.5	7	7.0	6	6.5	0	5	7.5	4	14.0	0.92	0.35	0.23	0.39	149	188	200
HS20 or HS20 MOD	31'-4"	18	21	17	7	7.5	6	6.5	7	7.0	6	6.0	0	5	7.0	4	14.0	0.92	0.35	0.24	0.39	149	190	202

NOTE: IF DESIGN FILL FALLS BETWEEN TABULATED FILLS, USE THE ADJACENT TABULATED FILL WHICH YIELDS THE GREATER MEMBER THICKNESS. IF THE MEMBER THICKNESSES ARE EQUAL, USE THE ADJACENT TABULATED FILL WHICH YIELDS THE GREATER AREA OF REINFORCEMENT.

SPECIAL DESIGNS ARE REQUIRED WHEN THE DESIGN FILL IS OUTSIDE THE RANGE OF TABULATED FILLS.

ALL DIMENSIONS ARE IN inch UNLESS OTHERWISE SPECIFIED

COEFFICIENTS: DIMENSIONS MARKED WITH C# OR K# ARE THE PRODUCT OF THE COEFFICIENT AND ITS ASSOCIATED MULTIPLIER.

DESIGN FILL HEIGHT GIVEN IN THE TABLES IS THE HEIGHT FROM THE TOP OF THE EARTH FILL OR ROADWAY TO THE TOP OF THE TOP SLAB.

ALL CULVERTS MEET STRENGTH REQUIREMENTS FOR MILITARY 24 kips TANDEM AXLE LOADING.

AT CONTRACTOR'S OPTION, A MODIFIED J3 ALTERNATIVE MAY BE UTILIZED WHEN THE DISTANCE BETWEEN THE ENDS OF J3 BARS AT TOP SLAB IS LESS THAN 2'-0". J3 BARS WITH HORIZONTAL LENGTH L1 (Instead of C1) MUST BE USED, WHERE L1 IS EQUAL TO 18", 22", AND 28" FOR #4, #5, AND #6 BARS, RESPECTIVELY. ADDITIONAL P1 BAR IS REQUIRED WITH THE MODIFIED J3 ALTERNATIVE AND MUST BE OF THE SAME SIZE AND SPACING AS J3 BAR WITH A LENGTH EQUAL TO A1 BAR. NO ADDITIONAL PAYMENT WILL BE MADE FOR THIS SUBSTITUTION.

MISSOURI HIGHWAY AND TRANSPORTATION COMMISSION

CONCRETE SINGLE BOX CULVERT

MEMBER SIZES AND REINFORCEMENT

(HS20 & HS20 MOD. LOADING)

DATE: EFFECTIVE: 04-01-2002 **703.15C** 8/13

Span (S) = 12 ft
HT (ft) = 9 or 10 or 11

	DESIGN FILL	MEMBER THICKNESSES			TOP SLAB BARS				BOTTOM SLAB BARS				WALL BARS					COEFFICIENTS (see note)				"C" Multiplier	"K" Multiplier		
		TS	BS	TX	A1	Bars	J3	Bars	A2	Bars	J4	Bars		B2 Bars		F	Bars	J4		J3		S = 12 ft	HT = 9 ft	HT = 10 ft	HT = 11 ft
	(ft-in)	Thick	Thick.	Thick	Size	c to c	Size	c to c	Size	c to c	Size	c to c	G1	Size	c to c	Size	c to c	K3	C4	K2	C1	in	in	in	in
HS20	0'-9"	11	10	9	6	6.0	5	7.5	7	7.0	5	6.5	12	5	11.5	4	14.0	0.94	0.37	0.27	0.58	153	124	136	148
HS20	2'-4"	11	11	9	7	7.5	5	6.5	7	7.0	5	6.5	12	5	11.5	4	14.0	0.94	0.32	0.27	0.35	153	125	137	149
HS20	4'-2"	9	11	9	6	7.0	5	6.0	7	7.5	5	7.0	0	5	11.5	4	14.0	0.95	0.30	0.26	0.31	153	123	135	147
HS20	5'-10"	9	11	9	6	7.0	5	6.0	7	7.5	5	6.0	0	5	11.5	4	14.0	0.95	0.28	0.26	0.30	153	123	135	147
HS20	7'-5"	9	12	9	6	6.5	6	7.5	7	7.5	5	6.0	0	5	11.5	4	14.0	0.95	0.27	0.29	0.31	153	124	136	148
HS20 MOD	0'-7"	13	11	9	7	8.0	5	8.5	7	7.0	5	6.0	12	5	11.5	4	14.0	0.93	0.37	0.28	0.59	153	127	139	151
HS20 MOD	2'-3"	12	12	9	7	7.0	5	6.0	7	6.5	5	6.5	12	5	11.5	4	14.0	0.93	0.32	0.27	0.36	153	127	139	151
HS20 MOD	4'-1"	10	12	9	6	6.5	5	6.0	7	7.0	5	7.0	0	5	11.5	4	14.0	0.94	0.30	0.26	0.31	153	125	137	149
HS20 MOD	5'-10"	9	12	9	6	6.5	6	8.0	7	7.5	5	6.5	0	5	11.5	4	14.0	0.95	0.28	0.29	0.31	153	124	136	148
HS20 MOD	7'-4"	10	12	9	6	6.5	6	8.0	7	7.0	6	8.5	0	5	11.5	4	14.0	0.94	0.29	0.27	0.30	153	125	137	149
HS20 or HS20 MOD	9'-0"	10	12	9	6	6.0	6	7.0	7	7.0	6	7.5	0	5	11.5	4	14.0	0.94	0.28	0.29	0.30	153	125	137	149
HS20 or HS20 MOD	10'-7"	11	13	9	6	6.0	6	7.0	7	7.0	6	7.0	0	5	11.5	4	14.0	0.94	0.27	0.30	0.28	153	127	139	151
HS20 or HS20 MOD	12'-2"	11	14	9	7	7.5	6	6.0	7	7.0	6	7.0	0	5	11.5	4	14.0	0.94	0.26	0.30	0.28	153	128	140	152
HS20 or HS20 MOD	13'-10"	11	14	10	7	8.0	6	6.5	7	7.0	6	8.0	0	5	11.5	4	14.0	0.94	0.26	0.30	0.29	154	128	140	152
HS20 or HS20 MOD	15'-5"	12	14	10	7	7.5	6	6.5	7	6.5	6	7.0	0	5	11.5	4	14.0	0.93	0.26	0.30	0.28	154	129	141	153
HS20 or HS20 MOD	17'-0"	13	15	11	7	7.0	6	7.0	7	6.5	6	7.0	0	5	11.5	4	14.0	0.93	0.26	0.30	0.28	155	131	143	155
HS20 or HS20 MOD	18'-6"	14	16	11	7	7.0	6	7.0	7	6.5	6	7.0	0	5	11.5	4	14.0	0.92	0.26	0.31	0.27	155	133	145	157
HS20 or HS20 MOD	20'-2"	14	17	11	7	7.0	6	6.0	7	6.0	6	7.0	0	5	11.5	4	14.0	0.92	0.25	0.31	0.27	155	134	146	158
HS20 or HS20 MOD	21'-9"	15	18	12	7	7.0	6	6.5	7	6.0	6	7.5	0	5	11.5	4	14.0	0.92	0.26	0.31	0.31	156	136	148	160
HS20 or HS20 MOD	23'-3"	16	18	12	7	6.5	6	6.5	7	6.0	6	7.0	0	5	11.5	4	14.0	0.91	0.26	0.31	0.30	156	137	149	161
HS20 or HS20 MOD	24'-11"	16	19	12	7	6.5	6	6.0	7	6.0	6	7.0	0	5	11.5	4	14.0	0.91	0.25	0.31	0.30	156	138	150	162
HS20 or HS20 MOD	26'-6"	17	20	13	7	6.0	6	6.5	8	7.5	6	7.0	0	5	11.5	4	14.0	0.91	0.25	0.32	0.30	157	140	152	164
HS20 or HS20 MOD	28'-0"	18	20	13	7	6.0	6	6.5	8	7.5	6	7.0	0	5	11.0	4	14.0	0.90	0.26	0.32	0.30	157	141	153	165
HS20 or HS20 MOD	29'-8"	18	21	13	7	6.0	6	6.0	8	7.5	6	7.0	0	5	11.5	4	14.0	0.90	0.25	0.32	0.30	157	142	154	166
HS20 or HS20 MOD	31'-3"	19	22	14	7	6.0	6	6.5	8	7.0	6	7.0	0	5	11.0	4	14.0	0.90	0.25	0.32	0.30	158	144	156	168

Span (S) = 12 ft
HT (ft) = 12 or 13

	DESIGN FILL	MEMBER THICKNESSES			TOP SLAB BARS				BOTTOM SLAB BARS				WALL BARS					COEFFICIENTS (see note)				"C" Multiplier	"K" Multiplier	
		TS	BS	TX	A1	Bars	J3	Bars	A2	Bars	J4	Bars		B2 Bars		F	Bars	J4		J3		S = 12 ft	HT = 12 ft	HT = 13 ft
	(ft-in)	Thick	Thick.	Thick	Size	c to c	Size	c to c	Size	c to c	Size	c to c	G1	Size	c to c	Size	c to c	K3	C4	K2	C1	in	in	in
HS20	0'-9"	11	10	10	6	6.0	5	7.0	7	7.0	5	6.0	12	5	11.0	4	14.0	0.95	0.45	0.21	0.60	154	160	172
HS20	2'-4"	11	12	10	6	6.0	5	6.0	7	7.0	5	6.5	12	5	11.5	4	14.0	0.95	0.40	0.21	0.49	154	162	174
HS20	4'-2"	9	11	10	6	7.0	5	6.5	7	7.5	5	6.0	0	5	11.5	4	14.0	0.96	0.36	0.20	0.37	154	159	171
HS20	5'-10"	9	12	10	6	7.0	5	6.0	7	7.5	6	8.5	0	5	11.5	4	14.0	0.96	0.36	0.20	0.34	154	160	172
HS20	7'-5"	9	12	10	6	7.0	6	8.0	7	7.5	6	7.5	0	5	11.0	4	14.0	0.96	0.34	0.22	0.35	154	160	172
HS20 MOD	0'-7"	13	11	10	7	7.5	5	7.5	7	7.0	6	8.5	12	5	11.5	4	14.0	0.94	0.48	0.22	0.60	154	163	175
HS20 MOD	2'-3"	12	13	10	7	7.0	6	8.5	7	7.0	5	6.0	12	5	11.5	4	14.0	0.94	0.42	0.22	0.55	154	164	176
HS20 MOD	4'-1"	10	12	10	6	7.0	5	6.0	7	7.0	5	6.0	0	5	11.5	4	14.0	0.95	0.37	0.20	0.38	154	161	173
HS20 MOD	5'-9"	10	12	10	6	7.0	6	8.5	7	7.0	6	8.0	0	5	11.5	4	14.0	0.95	0.36	0.21	0.36	154	161	173
HS20 MOD	7'-4"	10	12	10	6	7.0	6	8.0	7	7.0	6	7.0	0	5	11.0	4	14.0	0.95	0.34	0.23	0.35	154	161	173
HS20 or HS20 MOD	9'-0"	10	13	10	6	6.5	6	7.0	7	7.0	6	7.0	0	5	10.5	4	14.0	0.95	0.33	0.23	0.34	154	162	174
HS20 or HS20 MOD	10'-7"	11	13	11	6	6.5	6	7.0	7	7.0	6	7.0	0	5	11.5	4	14.0	0.95	0.32	0.23	0.33	155	163	175
HS20 or HS20 MOD	12'-2"	11	14	11	7	8.0	6	6.5	7	7.0	6	7.0	0	5	11.0	4	14.0	0.95	0.31	0.23	0.32	155	164	176
HS20 or HS20 MOD	13'-10"	11	14	12	6	6.5	6	7.0	7	7.5	6	7.0	0	5	11.5	4	14.0	0.95	0.31	0.23	0.32	156	164	176
HS20 or HS20 MOD	15'-5"	12	15	12	6	6.0	6	7.0	7	7.0	6	7.0	0	5	11.5	4	14.0	0.94	0.31	0.24	0.32	156	166	178
HS20 or HS20 MOD	17'-0"	13	16	12	6	6.0	6	7.0	7	7.0	6	7.0	0	5	10.5	4	14.0	0.94	0.30	0.24	0.32	156	168	180
HS20 or HS20 MOD	18'-6"	14	16	13	7	8.0	6	7.0	7	7.0	6	7.0	0	5	11.5	4	14.0	0.93	0.30	0.24	0.31	157	169	181
HS20 or HS20 MOD	20'-2"	14	17	13	7	7.5	6	6.0	7	6.5	6	6.5	0	5	11.0	4	14.0	0.93	0.30	0.24	0.31	157	170	182
HS20 or HS20 MOD	21'-9"	15	18	14	7	7.5	6	6.5	7	6.5	6	7.0	0	5	11.0	4	14.0	0.93	0.30	0.24	0.34	158	172	184
HS20 or HS20 MOD	23'-3"	16	19	14	7	7.0	6	6.5	7	6.5	6	6.5	0	5	10.5	4	14.0	0.92	0.30	0.25	0.34	158	174	186
HS20 or HS20 MOD	24'-11"	16	19	15	7	7.0	6	6.0	7	6.0	6	6.5	0	5	11.5	4	14.0	0.92	0.30	0.25	0.34	159	174	186
HS20 or HS20 MOD	26'-6"	17	20	15	7	7.0	6	6.0	7	6.0	6	6.5	0	5	9.5	4	14.0	0.92	0.30	0.25	0.34	159	176	188
HS20 or HS20 MOD	28'-0"	18	21	15	7	7.0	6	6.0	7	6.0	6	6.5	0	5	9.5	4	14.0	0.92	0.30	0.25	0.34	159	178	190
HS20 or HS20 MOD	29'-8"	18	21	16	7	6.5	6	6.0	7	6.0	6	6.5	0	5	10.0	4	14.0	0.92	0.30	0.25	0.34	160	178	190
HS20 or HS20 MOD	31'-3"	19	22	16	7	6.5	6	6.0	8	7.5	6	6.0	0	5	9.0	4	14.0	0.91	0.30	0.26	0.34	160	180	192

Span (S) = 12 ft
HT (ft) = 14 or 15

	DESIGN FILL	MEMBER THICKNESSES			TOP SLAB BARS				BOTTOM SLAB BARS				WALL BARS					COEFFICIENTS (see note)				"C" Multiplier	"K" Multiplier	
		TS	BS	TX	A1	Bars	J3	Bars	A2	Bars	J4	Bars		B2 Bars		F	Bars	J4		J3		S = 12 ft	HT = 14 ft	HT = 15 ft
	(ft-in)	Thick	Thick.	Thick	Size	c to c	Size	c to c	Size	c to c	Size	c to c	G1	Size	c to c	Size	c to c	K3	C4	K2	C1	in	in	in
HS20	0'-9"	11	11	11	6	6.0	5	7.0	7	7.0	6	8.5	12	5	9.0	4	14.0	0.95	0.63	0.18	0.60	155	185	197
HS20	2'-4"	11	12	11	6	6.0	5	6.0	7	7.0	6	8.5	12	5	9.0	4	14.0	0.95	0.58	0.18	0.60	155	186	198
HS20	4'-2"	9	11	11	6	7.0	6	8.0	7	7.0	6	7.0	0	5	8.0	4	14.0	0.96	0.46	0.19	0.46	155	183	195
HS20	5'-10"	9	12	11	6	7.0	6	7.0	7	7.5	6	7.0	0	5	7.5	4	14.0	0.96	0.44	0.20	0.41	155	184	196
HS20	7'-5"	9	12	11	6	7.0	6	7.0	7	7.0	6	7.0	0	5	7.0	4	14.0	0.96	0.41	0.20	0.39	155	184	196
HS20 MOD	0'-7"	13	11	11	7	7.5	5	7.0	7	6.5	6	8.0	12	5	9.5	4	14.0	0.94	0.63	0.19	0.60	155	187	199
HS20 MOD	2'-3"	12	13	11	7	7.0	6	8.0	7	6.5	6	8.0	12	5	9.0	4	14.0	0.95	0.63	0.20	0.61	155	188	200
HS20 MOD	4'-1"	10	12	11	6	7.0	5	6.0	7	7.0	6	8.0	0	5	8.5	4	14.0	0.96	0.48	0.18	0.48	155	185	197
HS20 MOD	5'-9"	10	12	11	6	7.0	6	8.5	7	7.0	6	7.0	0	5	7.5	4	14.0	0.96	0.43	0.19	0.43	155	185	197
HS20 MOD	7'-4"	10	13	11	6	7.0	6	7.5	7	7.0	6	7.0	0	5	7.0	4	14.0	0.96	0.42	0.20	0.41	155	186	198
HS20 or HS20 MOD	9'-0"	10	13	12	6	6.5	6	7.0	7	7.0	6	7.0	0	5	7.5	4	14.0	0.96	0.39	0.20	0.38	156	186	198
HS20 or HS20 MOD	10'-7"	11	14	12	6	6.5	6	7.0	7	7.0	6	6.5	0	5	7.0	4	14.0	0.95	0.38	0.20	0.38	156	188	200
HS20 or HS20 MOD	12'-2"	11	14	13	6	6.5	6	7.0	7	7.0	6	7.0	0	5	7.5	4	14.0	0.95	0.37	0.20	0.37	157	188	200
HS20 or HS20 MOD	13'-10"	11	14	13	6	6.5	6	7.0	7	7.0	6	6.5	0	5	7.0	4	14.0	0.95	0.36	0.20	0.36	157	188	200
HS20 or HS20 MOD	15'-5"	12	15	14	6	6.5	6	7.0	7	7.0	6	7.0	0	5	7.5	4	14.0	0.95	0.36	0.21	0.36	158	190	202
HS20 or HS20 MOD	17'-0"	13	16	14	6	6.5	6	7.0	7	7.0	6	6.0	0	5	7.0	4	14.0	0.95	0.35	0.21	0.36	158	192	204
HS20 or HS20 MOD	18'-6"	14	17	15	6	6.5	6	7.0	7	7.0	6	6.5	0	5	7.5	4	14.0	0.94	0.35	0.21	0.35	159	194	206
HS20 or HS20 MOD	20'-2"	14	17	15	7	8.0	6	6.5	7	7.0	6	6.0	0	5	7.0	4	14.0	0.94	0.34	0.21	0.35	159	194	206
HS20 or HS20 MOD	21'-9"	15	18	16	7	8.0	6	7.0	7	7.0	6	6.0	0	5	7.5	4	14.0	0.94	0.34	0.22	0.38	160	196	208
HS20 or HS20 MOD	23'-3"	16	19	16	7	7.5	6	6.5	7	7.0	6	6.0	0	5	7.0	4	14.0	0.93	0.34	0.22	0.38	160	198	210
HS20 or HS20 MOD	24'-11"	16	20	17	7	7.5	6	6.5	7	6.5	6	6.0	0	5	7.5	4	14.0	0.93	0.34	0.22	0.38	161	199	211
HS20 or HS20 MOD	26'-6"	17	20	17	7	7.0	6	6.0	7	6.5	6	6.0	0	5	7.0	4	14.0	0.93	0.34	0.22	0.38	161	200	212
HS20 or HS20 MOD	28'-0"	18	21	18	7	7.0	6	6.0	7	6.5	6	6.0	0	5	7.0	4	14.0	0.93	0.34	0.22	0.38	162	202	214
HS20 or HS20 MOD	29'-8"	18	22	18	7	7.0	6	6.0	7	6.0	6	6.0	0	5	7.0	4	14.0	0.93	0.34	0.22	0.38	162	203	215
HS20 or HS20 MOD	31'-3"	19	22	19	7	7.0	7	8.0	7	6.0	7	8.0	0	5	7.0	4	14.0	0.92	0.34	0.26	0.39	163	204	216

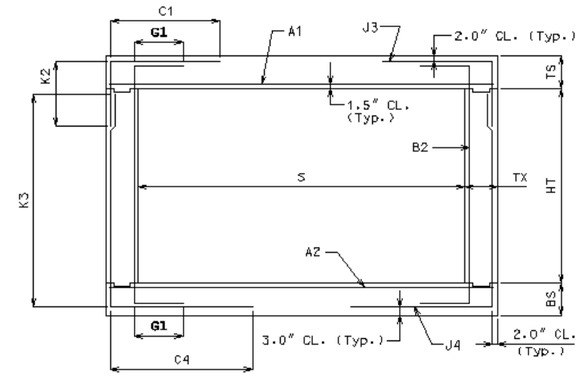

SECTION THRU BOX

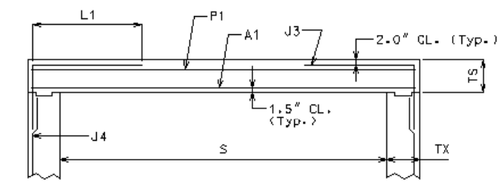

PART SECTION THRU BOX FOR MODIFIED J3 ALTERNATIVE
(B2 BAR NOT SHOWN FOR CLARITY)

NOTE: IF DESIGN FILL FALLS BETWEEN TABULATED FILLS, USE THE ADJACENT TABULATED FILL WHICH YIELDS THE GREATER MEMBER THICKNESS. IF THE MEMBER THICKNESSES ARE EQUAL, USE THE ADJACENT TABULATED FILL WHICH YIELDS THE GREATER AREA OF REINFORCEMENT.

SPECIAL DESIGNS ARE REQUIRED WHEN THE DESIGN FILL IS OUTSIDE THE RANGE OF TABULATED FILLS.

ALL DIMENSIONS ARE IN inch UNLESS OTHERWISE SPECIFIED.

COEFFICIENTS: DIMENSIONS MARKED WITH C# OR K# ARE THE PRODUCT OF THE COEFFICIENT AND ITS ASSOCIATED MULTIPLIER.

DESIGN FILL HEIGHT GIVEN IN THE TABLES IS THE HEIGHT FROM THE TOP OF THE EARTH FILL OR ROADWAY TO THE TOP OF THE TOP SLAB.

ALL CULVERTS MEET STRENGTH REQUIREMENTS FOR MILITARY 24 kips TANDEM AXLE LOADING.

AT CONTRACTOR'S OPTION, A MODIFIED J3 ALTERNATIVE MAY BE UTILIZED WHEN THE DISTANCE BETWEEN THE ENDS OF J3 BARS AT TOP SLAB IS LESS THAN 2'-0". J3 BARS WITH HORIZONTAL LENGTH L1 (Instead of C1) MUST BE USED, WHERE L1 IS EQUAL TO 18", 22", AND 28" FOR #4, #5, AND #6 BARS, RESPECTIVELY. ADDITIONAL P1 BAR IS REQUIRED WITH THE MODIFIED J3 ALTERNATIVE AND MUST BE OF THE SAME SIZE AND SPACING AS J3 BAR WITH A LENGTH EQUAL TO A1 BAR. NO ADDITIONAL PAYMENT WILL BE MADE FOR THIS SUBSTITUTION.

MISSOURI HIGHWAY AND TRANSPORTATION COMMISSION

CONCRETE SINGLE BOX CULVERT

MEMBER SIZES AND REINFORCEMENT

(HS20 & HS20 MOD. LOADING)

DATE: | EFFECTIVE: 04-01-2002 | **703.15C** | 9/13

Span (S) = 13 ft

HT (ft) = 10 or 11 or 12

	DESIGN FILL	MEMBER THICKNESSES			TOP SLAB BARS				BOTTOM SLAB BARS				WALL BARS					COEFFICIENTS (see note)				"C" Multiplier	"K" Multiplier		
		TS	BS	TX	A1	Bars	J3	Bars	A2	Bars	J4	Bars	B2 Bars			F	Bars	J4		J3		S = 13 ft	HT = 10 ft	HT = 11 ft	HT = 12 ft
	(ft-in)	Thick	Thick.	Thick	Size	c to c	Size	c to c	Size	c to c	Size	c to c	G1	Size	c to c	Size	c to c	K3	C4	K2	C1	in	in	in	in
HS20	0'-9"	11	10	10	7	7.5	5	7.0	7	7.0	6	8.5	12	5	11.5	4	14.0	0.94	0.37	0.25	0.54	166	136	148	160
HS20	2'-4"	11	12	10	7	7.0	6	8.0	7	7.0	5	6.5	12	5	11.5	4	14.0	0.94	0.32	0.27	0.37	166	138	150	162
HS20	4'-1"	10	11	10	6	6.5	5	6.0	7	7.0	5	6.0	0	5	11.5	4	14.0	0.95	0.30	0.24	0.30	166	136	148	160
HS20	5'-9"	10	12	10	6	6.5	6	8.0	7	7.0	6	8.5	0	5	11.5	4	14.0	0.95	0.30	0.27	0.29	166	137	149	161
HS20	7'-4"	10	12	10	6	6.0	6	7.0	7	7.0	6	7.5	0	5	11.5	4	14.0	0.95	0.29	0.27	0.30	166	137	149	161
HS20 MOD	0'-7"	13	11	10	7	7.0	5	7.0	7	6.5	6	8.0	12	5	11.5	4	14.0	0.93	0.38	0.26	0.59	166	139	151	163
HS20 MOD	2'-2"	13	13	10	7	6.5	5	6.0	7	6.5	5	6.0	12	5	11.5	4	14.0	0.93	0.32	0.25	0.36	166	141	153	165
HS20 MOD	4'-1"	10	12	10	7	7.5	6	7.5	7	7.0	5	6.0	0	5	11.5	4	14.0	0.95	0.30	0.27	0.32	166	137	149	161
HS20 MOD	5'-9"	10	12	10	7	8.0	6	7.0	7	6.5	6	8.0	0	5	11.5	4	14.0	0.95	0.30	0.27	0.31	166	137	149	161
HS20 MOD	7'-4"	10	13	10	7	7.5	6	7.0	7	7.0	6	8.0	0	5	11.5	4	14.0	0.95	0.28	0.27	0.30	166	138	150	162
HS20 or HS20 MOD	8'-11"	11	13	10	7	7.5	6	7.0	7	6.5	6	7.0	0	5	11.5	4	14.0	0.94	0.28	0.27	0.29	166	139	151	163
HS20 or HS20 MOD	10'-7"	11	14	10	7	7.0	6	6.0	7	6.5	6	7.0	0	5	11.5	4	14.0	0.94	0.27	0.27	0.29	166	140	152	164
HS20 or HS20 MOD	12'-1"	12	15	10	7	7.0	6	6.0	7	6.0	6	6.5	0	5	11.5	4	14.0	0.94	0.26	0.28	0.28	166	142	154	166
HS20 or HS20 MOD	13'-9"	12	15	11	7	7.0	6	6.0	7	6.0	6	7.0	0	5	11.5	4	14.0	0.94	0.26	0.28	0.28	167	142	154	166
HS20 or HS20 MOD	15'-4"	13	15	11	7	7.0	6	6.0	7	6.0	6	6.5	0	5	11.5	4	14.0	0.93	0.26	0.28	0.27	167	143	155	167
HS20 or HS20 MOD	16'-11"	14	16	12	7	7.0	6	6.5	7	6.0	6	7.0	0	5	11.5	4	14.0	0.93	0.26	0.28	0.28	168	145	157	169
HS20 or HS20 MOD	18'-5"	15	17	12	7	7.0	6	6.5	7	6.0	6	7.0	0	5	11.5	4	14.0	0.92	0.26	0.29	0.30	168	147	159	171
HS20 or HS20 MOD	20'-1"	15	18	12	7	6.0	7	8.0	8	7.0	6	6.5	0	5	11.5	4	14.0	0.92	0.25	0.31	0.33	168	148	160	172
HS20 or HS20 MOD	21'-8"	16	19	13	7	6.0	6	6.0	8	7.0	6	7.0	0	5	11.5	4	14.0	0.92	0.25	0.29	0.30	169	150	162	174
HS20 or HS20 MOD	23'-2"	17	19	13	7	6.0	6	6.0	8	7.0	6	6.5	0	5	11.0	4	14.0	0.91	0.25	0.29	0.29	169	151	163	175
HS20 or HS20 MOD	24'-9"	18	20	14	7	6.0	6	6.0	8	7.0	6	6.5	0	5	11.5	4	14.0	0.91	0.26	0.29	0.30	170	153	165	177
HS20 or HS20 MOD	26'-5"	18	21	14	8	7.5	7	8.0	8	7.0	6	6.5	0	5	11.0	4	14.0	0.91	0.25	0.29	0.32	170	154	166	178
HS20 or HS20 MOD	27'-11"	19	22	14	8	7.5	7	8.0	8	7.0	6	6.5	0	5	10.0	4	14.0	0.90	0.25	0.30	0.32	170	156	168	180
HS20 or HS20 MOD	29'-6"	20	22	15	8	7.0	6	6.0	8	7.0	6	6.5	0	5	11.0	4	14.0	0.90	0.25	0.30	0.29	171	157	169	181
HS20 or HS20 MOD	31'-2"	20	23	15	8	7.0	7	7.5	8	7.0	6	6.5	0	5	10.5	4	14.0	0.90	0.25	0.32	0.32	171	158	170	182

SPAN (S) = 13 ft

HT (ft) = 13 or 14

	DESIGN FILL	MEMBER THICKNESSES			TOP SLAB BARS				BOTTOM SLAB BARS				WALL BARS					COEFFICIENTS (see note)				"C" Multiplier	"K" Multiplier	
		TS	BS	TX	A1	Bars	J3	Bars	A2	Bars	J4	Bars	B2 Bars			F	Bars	J4		J3		S = 13 ft	HT = 13 ft	HT = 14 ft
	(ft-in)	Thick	Thick.	Thick	Size	c to c	Size	c to c	Size	c to c	Size	c to c	G1	Size	c to c	Size	c to c	K3	C4	K2	C1	in	in	in
HS20	0'-9"	11	11	11	7	7.5	5	6.5	7	7.0	5	6.0	12	5	11.5	4	14.0	0.95	0.44	0.19	0.59	167	173	185
HS20	2'-4"	11	12	11	7	7.0	6	8.0	7	7.0	6	8.5	12	5	11.5	4	14.0	0.95	0.40	0.22	0.47	167	174	186
HS20	4'-1"	10	12	11	6	6.5	5	6.0	7	7.0	6	8.0	0	5	11.0	4	14.0	0.96	0.37	0.19	0.37	167	173	185
HS20	5'-9"	10	12	11	6	6.5	6	8.0	7	7.0	6	7.5	0	5	11.0	4	14.0	0.96	0.35	0.21	0.34	167	173	185
HS20	7'-4"	10	13	11	6	6.0	6	7.0	7	6.5	6	7.0	0	5	10.5	4	14.0	0.96	0.33	0.21	0.34	167	174	186
HS20 MOD	0'-7"	13	12	11	7	7.0	5	7.0	7	6.5	6	7.5	12	5	11.5	4	14.0	0.94	0.48	0.20	0.59	167	176	188
HS20 MOD	2'-2"	13	13	11	7	6.5	6	8.5	7	6.5	6	8.0	12	5	11.5	4	14.0	0.94	0.41	0.23	0.57	167	177	189
HS20 MOD	4'-1"	10	12	11	7	7.5	6	7.5	7	6.5	6	8.0	0	5	11.0	4	14.0	0.96	0.37	0.21	0.38	167	173	185
HS20 MOD	5'-9"	10	13	11	6	6.0	6	7.5	7	7.0	6	7.5	0	5	11.0	4	14.0	0.96	0.35	0.21	0.36	167	174	186
HS20 MOD	7'-4"	10	13	11	7	8.0	6	7.0	7	6.5	6	7.0	0	5	10.5	4	14.0	0.96	0.33	0.21	0.34	167	174	186
HS20 or HS20 MOD	8'-11"	11	14	11	7	8.0	6	7.0	7	6.5	6	6.5	0	5	10.0	4	14.0	0.95	0.32	0.22	0.33	167	176	188
HS20 or HS20 MOD	10'-7"	11	14	11	7	7.5	6	6.5	7	6.5	6	6.0	0	5	9.5	4	14.0	0.95	0.31	0.22	0.32	167	176	188
HS20 or HS20 MOD	12'-1"	12	15	12	7	7.5	6	6.5	7	6.5	6	6.5	0	5	10.5	4	14.0	0.95	0.31	0.22	0.32	168	178	190
HS20 or HS20 MOD	13'-9"	12	15	12	7	8.0	6	6.0	7	7.0	6	6.0	0	5	10.0	4	14.0	0.95	0.30	0.22	0.31	168	178	190
HS20 or HS20 MOD	15'-4"	13	16	13	7	8.0	6	6.5	7	7.0	6	6.5	0	5	11.0	4	14.0	0.94	0.30	0.22	0.31	169	180	192
HS20 or HS20 MOD	16'-11"	14	17	13	7	7.0	6	6.0	7	6.0	6	6.0	0	5	9.5	4	14.0	0.94	0.30	0.23	0.31	169	182	194
HS20 or HS20 MOD	18'-5"	15	17	14	7	7.0	6	6.0	7	6.0	6	6.0	0	5	11.0	4	14.0	0.94	0.30	0.23	0.32	170	183	195
HS20 or HS20 MOD	20'-1"	15	18	14	7	7.0	7	8.0	7	6.0	6	6.0	0	5	10.0	4	14.0	0.93	0.29	0.27	0.35	170	184	196
HS20 or HS20 MOD	21'-8"	16	19	15	7	7.0	6	6.0	7	6.0	6	6.0	0	5	9.5	4	14.0	0.93	0.29	0.23	0.33	171	186	198
HS20 or HS20 MOD	23'-2"	17	20	15	7	7.0	7	8.0	7	6.0	6	6.0	0	5	9.5	4	14.0	0.92	0.29	0.27	0.36	171	188	200
HS20 or HS20 MOD	24'-9"	18	21	16	7	6.5	6	6.0	8	7.5	6	6.0	0	5	9.5	4	14.0	0.92	0.30	0.28	0.34	172	190	202
HS20 or HS20 MOD	26'-5"	18	21	16	7	6.5	7	8.0	8	7.0	7	8.0	0	5	9.0	4	14.0	0.92	0.32	0.28	0.36	172	190	202
HS20 or HS20 MOD	27'-11"	19	22	17	7	6.0	7	7.5	8	7.0	6	6.0	0	5	7.5	4	14.0	0.92	0.29	0.28	0.36	173	192	204
HS20 or HS20 MOD	29'-6"	20	23	17	7	6.0	7	8.0	8	7.0	7	8.0	0	5	8.5	4	14.0	0.91	0.31	0.28	0.36	173	194	206
HS20 or HS20 MOD	31'-2"	20	23	17	8	7.5	7	7.5	8	7.0	7	7.5	0	5	8.5	4	14.0	0.91	0.31	0.28	0.36	173	194	206

SPAN (S) = 13 ft

HT (ft) = 15 or 16

	DESIGN FILL	MEMBER THICKNESSES			TOP SLAB BARS				BOTTOM SLAB BARS				WALL BARS					COEFFICIENTS (see note)				"C" Multiplier	"K" Multiplier	
		TS	BS	TX	A1	Bars	J3	Bars	A2	Bars	J4	Bars	B2 Bars			F	Bars	J4		J3		S = 13 ft	HT = 15 ft	HT = 16 ft
	(ft-in)	Thick	Thick.	Thick	Size	c to c	Size	c to c	Size	c to c	Size	c to c	G1	Size	c to c	Size	c to c	K3	C4	K2	C1	in	in	in
HS20	0'-9"	11	11	12	7	7.5	5	6.5	7	7.0	6	7.0	12	5	8.5	4	14.0	0.96	0.60	0.17	0.59	168	197	209
HS20	2'-4"	11	12	12	7	7.0	6	8.0	7	6.5	6	7.0	12	5	8.5	4	14.0	0.96	0.50	0.19	0.61	168	198	210
HS20	4'-1"	10	12	12	6	6.5	6	8.0	7	7.0	6	7.0	0	5	7.5	4	14.0	0.96	0.44	0.19	0.46	168	197	209
HS20	5'-9"	10	13	12	6	6.5	6	7.0	7	7.0	6	7.0	0	5	7.0	4	14.0	0.96	0.42	0.19	0.41	168	198	210
HS20	7'-4"	10	13	12	6	6.5	6	7.0	7	7.0	6	6.5	0	5	7.0	4	14.0	0.96	0.40	0.19	0.39	168	198	210
HS20 MOD	0'-7"	13	12	12	7	7.0	5	6.0	7	6.5	6	7.5	12	5	9.0	4	14.0	0.95	0.63	0.18	0.59	168	200	212
HS20 MOD	2'-3"	12	13	12	7	6.5	6	7.0	7	6.0	6	7.0	12	5	8.5	4	14.0	0.95	0.52	0.20	0.61	168	200	212
HS20 MOD	4'-1"	10	13	12	7	8.0	6	7.0	7	6.5	6	7.0	0	5	7.5	4	14.0	0.96	0.47	0.19	0.45	168	198	210
HS20 MOD	5'-9"	10	13	12	6	6.0	6	7.0	7	6.5	6	7.0	0	5	7.0	4	14.0	0.96	0.42	0.19	0.41	168	198	210
HS20 MOD	7'-4"	10	13	12	6	6.0	6	6.5	7	6.5	6	6.5	0	5	7.0	4	14.0	0.96	0.40	0.19	0.39	168	198	210
HS20 or HS20 MOD	8'-11"	11	14	12	6	6.0	6	7.0	7	6.5	7	8.0	0	5	7.0	4	14.0	0.96	0.41	0.19	0.38	168	200	212
HS20 or HS20 MOD	10'-7"	11	15	13	7	8.0	6	6.0	7	6.5	6	6.0	0	5	7.0	4	14.0	0.96	0.37	0.19	0.36	169	201	213
HS20 or HS20 MOD	12'-1"	12	15	14	6	6.0	6	6.5	7	6.5	6	6.0	0	5	7.0	4	14.0	0.95	0.36	0.19	0.36	170	202	214
HS20 or HS20 MOD	13'-8"	13	16	14	7	8.0	6	6.5	7	6.5	7	8.0	0	5	7.0	4	14.0	0.95	0.38	0.20	0.36	170	204	216
HS20 or HS20 MOD	15'-4"	13	16	15	6	6.0	6	7.0	7	7.0	6	6.0	0	5	7.0	4	14.0	0.95	0.35	0.20	0.35	171	204	216
HS20 or HS20 MOD	16'-11"	14	17	15	7	8.0	6	6.5	7	6.5	7	8.0	0	5	7.0	4	14.0	0.95	0.37	0.20	0.35	171	206	218
HS20 or HS20 MOD	18'-6"	14	18	16	7	7.5	6	6.0	7	6.5	6	6.0	0	5	7.0	4	14.0	0.95	0.34	0.20	0.34	172	207	219
HS20 or HS20 MOD	20'-1"	15	19	16	7	7.0	6	6.0	7	6.0	7	7.5	0	5	7.0	4	14.0	0.94	0.36	0.20	0.37	172	209	221
HS20 or HS20 MOD	21'-8"	16	19	17	7	7.0	6	6.0	7	6.0	7	8.0	0	5	7.0	4	14.0	0.94	0.36	0.21	0.37	173	210	222
HS20 or HS20 MOD	23'-2"	17	20	17	7	7.0	7	8.0	7	6.0	7	7.5	0	5	7.0	4	14.0	0.93	0.35	0.24	0.39	173	212	224
HS20 or HS20 MOD	24'-9"	18	21	18	7	7.0	6	6.0	7	6.0	7	7.5	0	5	7.0	4	14.0	0.93	0.35	0.21	0.36	174	214	226
HS20 or HS20 MOD	26'-5"	18	22	18	7	7.0	7	7.5	8	7.5	7	7.5	0	5	7.0	4	14.0	0.93	0.35	0.24	0.39	174	215	227
HS20 or HS20 MOD	27'-11"	19	22	19	7	6.5	7	8.0	8	7.5	7	7.5	0	5	7.0	4	14.0	0.93	0.35	0.25	0.39	175	216	228
HS20 or HS20 MOD	29'-6"	20	23	19	7	6.5	7	7.5	8	7.5	7	7.0	0	5	7.0	4	14.0	0.92	0.35	0.25	0.39	175	218	230
HS20 or HS20 MOD	31'-2"	20	24	20	7	6.5	7	7.5	8	7.0	7	7.5	0	5	7.0	4	14.0	0.92	0.35	0.25	0.39	176	219	231

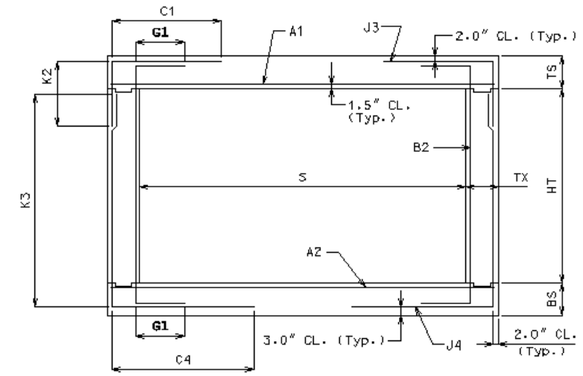

SECTION THRU BOX

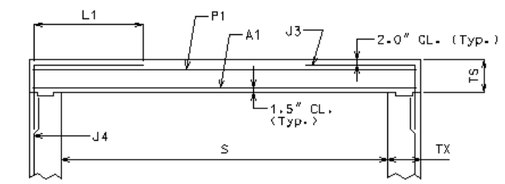

PART SECTION THRU BOX FOR MODIFIED J3 ALTERNATIVE

(B2 BAR NOT SHOWN FOR CLARITY)

NOTE: IF DESIGN FILL FALLS BETWEEN TABULATED FILLS, USE THE ADJACENT TABULATED FILL WHICH YIELDS THE GREATER MEMBER THICKNESS. IF THE MEMBER THICKNESSES ARE EQUAL, USE THE ADJACENT TABULATED FILL WHICH YIELDS THE GREATER AREA OF REINFORCEMENT.

SPECIAL DESIGNS ARE REQUIRED WHEN THE DESIGN FILL IS OUTSIDE THE RANGE OF TABULATED FILLS.

ALL DIMENSIONS ARE IN inch UNLESS OTHERWISE SPECIFIED

COEFFICIENTS: DIMENSIONS MARKED WITH C# OR K# ARE THE PRODUCT OF THE COEFFICIENT AND ITS ASSOCIATED MULTIPLIER.

DESIGN FILL HEIGHT GIVEN IN THE TABLES IS THE HEIGHT FROM THE TOP OF THE EARTH FILL OR ROADWAY TO THE TOP OF THE TOP SLAB.

ALL CULVERTS MEET STRENGTH REQUIREMENTS FOR MILITARY 24 kips TANDEM AXLE LOADING.

AT CONTRACTOR'S OPTION, A MODIFIED J3 ALTERNATIVE MAY BE UTILIZED WHEN THE DISTANCE BETWEEN THE ENDS OF J3 BARS AT TOP SLAB IS LESS THAN 2'-0". J3 BARS WITH HORIZONTAL LENGTH L1 (Instead of C1) MUST BE USED, WHERE L1 IS EQUAL TO 18", 22", AND 28" FOR #4, #5, AND #6 BARS, RESPECTIVELY. ADDITIONAL P1 BAR IS REQUIRED WITH THE MODIFIED J3 ALTERNATIVE AND MUST BE OF THE SAME SIZE AND SPACING AS J3 BAR WITH A LENGTH EQUAL TO A1 BAR. NO ADDITIONAL PAYMEN1 WILL BE MADE FOR THIS SUBSTITUTION.

MISSOURI HIGHWAY AND TRANSPORTATION COMMISSION

CONCRETE SINGLE BOX CULVERT

MEMBER SIZES AND REINFORCEMENT

(HS20 & HS20 MOD. LOADING)

DATE: EFFECTIVE: 04-01-2002 **703.15C** 10/13

Span (S) = 14 ft; HT (ft) = 11 or 12

Load	DESIGN FILL (ft-in)	TS Thick	BS Thick.	TX Thick	TOP SLAB A1 Size	A1 Bars c to c	J3 Size	J3 Bars c to c	BOTTOM SLAB A2 Size	A2 Bars c to c	J4 Size	J4 Bars c to c	WALL G1	B2 Size	B2 Bars c to c	F Size	F Bars c to c	J4 K3	J4 C4	J3 K2	J3 C1	"C" Multiplier S = 14 ft (in)	"K" Multiplier HT = 11 ft (in)	"K" Multiplier HT = 12 ft (in)
HS20	0'-9"	11	13	10	7	7.5	6	8.0	7	7.0	6	8.0	12	5	11.5	4	14.0	0.94	0.37	0.25	0.43	178	151	163
	2'-4"	11	12	10	7	6.0	6	7.0	7	6.5	6	8.5	12	5	11.5	4	14.0	0.94	0.31	0.25	0.33	178	150	162
	4'-1"	10	12	10	7	7.5	6	7.0	7	7.0	5	6.0	0	5	11.5	4	14.0	0.95	0.27	0.25	0.30	178	149	161
	5'-9"	10	12	10	7	7.0	6	7.0	7	6.0	6	7.5	0	5	11.5	4	14.0	0.95	0.28	0.25	0.29	178	149	161
	7'-4"	10	13	10	7	7.0	6	6.0	7	6.0	6	7.5	0	5	11.5	4	14.0	0.95	0.26	0.25	0.29	178	150	162
HS20 MOD	0'-7"	13	15	10	7	7.0	5	6.0	7	7.0	6	8.5	12	5	11.5	4	14.0	0.93	0.37	0.23	0.47	178	155	167
	2'-2"	13	13	10	8	7.5	6	8.0	7	6.0	6	8.0	12	5	11.5	4	14.0	0.93	0.31	0.26	0.33	178	153	165
	4'-0"	11	12	10	7	7.0	6	7.0	7	6.0	6	8.0	0	5	11.5	4	14.0	0.94	0.29	0.25	0.30	178	150	162
	5'-8"	11	13	10	7	7.0	6	7.0	7	6.0	6	8.0	0	5	11.5	4	14.0	0.94	0.27	0.25	0.29	178	151	163
	7'-3"	11	13	10	7	7.0	6	6.5	7	6.0	6	7.0	0	5	11.5	4	14.0	0.94	0.26	0.25	0.28	178	151	163
HS20 or HS20 MOD	8'-11"	11	14	10	7	6.5	7	8.0	7	6.0	6	7.0	0	5	11.5	4	14.0	0.94	0.25	0.30	0.28	178	152	164
	10'-6"	12	15	10	7	6.5	7	8.0	8	7.0	6	6.5	0	5	11.5	4	14.0	0.94	0.24	0.30	0.27	178	154	166
	12'-0"	13	15	10	7	6.5	7	7.5	8	7.0	6	6.0	0	5	11.5	4	14.0	0.93	0.24	0.30	0.28	178	155	167
	13'-7"	14	16	11	7	6.5	6	6.0	8	7.5	6	6.5	0	5	11.5	4	14.0	0.93	0.24	0.26	0.26	179	157	169
	15'-3"	14	16	11	7	6.5	6	6.0	8	7.5	6	6.5	0	5	11.5	4	14.0	0.93	0.24	0.26	0.25	179	157	169
	16'-10"	15	17	11	7	6.5	7	8.0	8	7.5	6	6.0	0	5	11.5	4	14.0	0.92	0.23	0.29	0.30	179	159	171
	18'-5"	15	18	12	7	6.0	7	7.5	8	7.0	6	6.5	0	5	11.5	4	14.0	0.92	0.23	0.31	0.31	180	160	172
	20'-0"	16	19	12	8	7.5	7	7.5	8	7.0	6	6.5	0	5	11.5	4	14.0	0.92	0.23	0.31	0.30	180	162	174
	21'-7"	17	20	13	8	7.5	7	8.0	8	7.0	6	6.5	0	5	11.5	4	14.0	0.91	0.23	0.31	0.30	181	164	176
	23'-1"	18	21	13	8	7.5	7	7.5	8	7.0	6	6.5	0	5	11.5	4	14.0	0.91	0.23	0.32	0.30	181	166	178
	24'-8"	19	21	14	8	7.0	7	8.0	8	6.5	6	6.0	0	5	11.5	4	14.0	0.90	0.23	0.32	0.30	182	167	179
	26'-3"	20	22	14	8	7.0	7	8.0	8	6.5	6	6.0	0	5	11.5	4	14.0	0.90	0.23	0.30	0.30	182	169	181
	27'-10"	20	23	14	8	7.0	7	7.5	8	6.5	6	6.0	0	5	11.0	4	14.0	0.90	0.23	0.32	0.30	182	170	182
	29'-5"	21	24	15	8	7.0	7	7.5	8	6.5	6	6.5	0	5	11.5	4	14.0	0.90	0.23	0.32	0.30	183	172	184
	31'-0"	22	24	15	8	7.0	7	7.5	8	6.0	6	6.0	0	5	11.5	4	14.0	0.89	0.23	0.30	0.29	183	173	185

SPAN (S) = 14 ft; HT (ft) = 13 or 14

Load	DESIGN FILL (ft-in)	TS Thick	BS Thick.	TX Thick	TOP SLAB A1 Size	A1 Bars c to c	J3 Size	J3 Bars c to c	BOTTOM SLAB A2 Size	A2 Bars c to c	J4 Size	J4 Bars c to c	WALL G1	B2 Size	B2 Bars c to c	F Size	F Bars c to c	J4 K3	J4 C4	J3 K2	J3 C1	"C" Multiplier S = 14 ft (in)	"K" Multiplier HT = 13 ft (in)	"K" Multiplier HT = 14 ft (in)
HS20	0'-9"	11	14	11	7	7.5	6	8.5	7	7.0	6	7.5	12	5	11.5	4	14.0	0.95	0.48	0.22	0.60	179	176	188
	2'-4"	11	12	11	7	6.5	6	7.0	7	6.0	6	7.5	12	5	11.5	4	14.0	0.95	0.37	0.22	0.40	179	174	186
	4'-1"	10	12	11	7	8.0	6	7.5	7	7.0	6	8.0	0	5	11.5	4	14.0	0.96	0.34	0.21	0.35	179	173	185
	5'-9"	10	13	11	7	7.5	6	7.0	7	6.0	6	7.0	0	5	11.5	4	14.0	0.96	0.32	0.21	0.33	179	174	186
	7'-4"	10	13	11	7	7.0	6	6.5	7	6.0	6	7.0	0	5	11.5	4	14.0	0.96	0.30	0.21	0.31	179	174	186
HS20 MOD	0'-7"	13	15	11	7	7.0	6	8.5	7	7.0	6	7.5	12	5	11.5	4	14.0	0.94	0.49	0.22	0.60	179	179	191
	2'-2"	13	13	11	7	6.0	6	7.5	8	7.5	6	7.0	12	5	11.5	4	14.0	0.94	0.37	0.23	0.44	179	177	189
	4'-0"	11	13	11	7	7.0	6	7.0	7	6.0	6	7.0	0	5	11.5	4	14.0	0.95	0.34	0.22	0.35	179	175	187
	5'-8"	11	13	11	7	7.5	6	7.0	7	6.0	6	7.0	0	5	11.5	4	14.0	0.95	0.32	0.22	0.33	179	175	187
	7'-3"	11	14	11	7	7.0	6	6.5	8	7.5	6	6.5	0	5	11.5	4	14.0	0.95	0.30	0.22	0.31	179	176	188
HS20 or HS20 MOD	8'-11"	11	14	11	7	7.0	7	8.0	8	7.5	6	6.5	0	5	11.0	4	14.0	0.95	0.29	0.26	0.31	179	176	188
	10'-6"	12	15	11	7	7.0	7	8.0	7	6.0	6	6.0	0	5	10.5	4	14.0	0.95	0.29	0.24	0.32	179	178	190
	12'-0"	13	16	12	7	7.0	6	6.0	8	7.5	6	6.0	0	5	11.5	4	14.0	0.94	0.28	0.22	0.30	180	180	192
	13'-7"	14	16	12	7	6.5	7	8.0	8	7.5	7	7.5	0	5	11.0	4	14.0	0.94	0.30	0.27	0.31	180	181	193
	15'-3"	14	17	13	7	7.0	6	6.0	8	7.5	6	6.0	0	5	11.5	4	14.0	0.94	0.28	0.23	0.29	181	182	194
	16'-10"	15	17	13	7	7.0	7	8.0	8	7.5	7	7.5	0	5	11.0	4	14.0	0.93	0.30	0.27	0.34	181	183	195
	18'-5"	15	18	14	7	6.5	7	8.0	8	7.0	7	8.0	0	5	9.5	4	14.0	0.93	0.30	0.27	0.34	182	184	196
	20'-0"	16	19	14	7	6.0	7	7.5	8	7.0	7	8.0	0	5	10.5	4	14.0	0.93	0.29	0.27	0.34	182	186	198
	21'-7"	17	20	15	7	6.0	7	7.5	8	7.0	7	8.0	0	5	9.0	4	14.0	0.92	0.29	0.27	0.34	183	188	200
	23'-1"	18	21	15	7	6.0	7	7.5	8	7.0	7	8.0	0	5	10.0	4	14.0	0.92	0.29	0.28	0.33	183	190	202
	24'-8"	19	22	16	7	6.0	7	7.5	8	7.0	7	8.0	0	5	8.5	4	14.0	0.92	0.29	0.28	0.33	184	192	204
	26'-3"	20	23	16	8	7.5	7	7.5	8	7.0	7	8.0	0	5	10.0	4	14.0	0.91	0.29	0.28	0.33	184	194	206
	27'-10"	20	23	16	8	7.0	7	7.0	8	6.5	7	7.5	0	5	9.0	4	14.0	0.91	0.29	0.28	0.33	184	194	206
	29'-5"	21	24	17	8	7.0	7	7.0	8	6.5	7	7.5	0	5	7.5	4	14.0	0.91	0.29	0.28	0.33	185	196	208
	31'-0"	22	25	17	8	7.0	7	7.0	8	6.5	7	7.5	0	5	8.5	4	14.0	0.90	0.29	0.28	0.33	185	198	210

SPAN (S) = 14 ft; HT (ft) = 15 or 16

Load	DESIGN FILL (ft-in)	TS Thick	BS Thick.	TX Thick	TOP SLAB A1 Size	A1 Bars c to c	J3 Size	J3 Bars c to c	BOTTOM SLAB A2 Size	A2 Bars c to c	J4 Size	J4 Bars c to c	WALL G1	B2 Size	B2 Bars c to c	F Size	F Bars c to c	J4 K3	J4 C4	J3 K2	J3 C1	"C" Multiplier S = 14 ft (in)	"K" Multiplier HT = 15 ft (in)	"K" Multiplier HT = 16 ft (in)
HS20	0'-9"	11	14	12	7	7.5	6	8.5	7	7.0	6	7.0	12	5	9.0	4	14.0	0.96	0.62	0.19	0.60	180	200	212
	2'-4"	11	13	12	7	6.5	6	7.0	7	6.0	6	7.0	12	5	8.5	4	14.0	0.96	0.46	0.19	0.56	180	199	211
	4'-1"	10	12	12	7	8.0	6	7.0	7	6.5	6	6.5	0	5	8.0	4	14.0	0.96	0.39	0.19	0.40	180	197	209
	5'-9"	10	13	12	7	8.0	6	7.0	7	6.5	6	7.0	0	5	7.5	4	14.0	0.96	0.38	0.19	0.37	180	198	210
	7'-4"	10	13	12	7	7.5	6	6.0	7	6.0	6	6.0	0	5	7.5	4	14.0	0.96	0.36	0.19	0.35	180	198	210
HS20 MOD	0'-7"	13	15	12	7	7.0	6	8.0	7	6.5	6	7.0	12	5	9.5	4	14.0	0.95	0.62	0.20	0.60	180	203	215
	2'-2"	13	14	12	7	6.0	6	7.0	8	7.5	6	7.0	12	5	9.0	4	14.0	0.95	0.47	0.20	0.60	180	202	214
	4'-0"	11	13	12	7	7.5	6	7.0	7	6.5	6	7.0	0	5	8.5	4	14.0	0.96	0.40	0.19	0.42	180	199	211
	5'-8"	11	14	12	7	7.5	6	7.0	7	6.0	6	6.5	0	5	7.5	4	14.0	0.96	0.38	0.19	0.38	180	200	212
	7'-3"	11	14	12	7	7.5	6	6.5	7	6.0	6	6.0	0	5	7.5	4	14.0	0.96	0.36	0.19	0.36	180	200	212
HS20 or HS20 MOD	8'-11"	11	14	12	7	7.0	6	6.0	8	7.5	7	7.5	0	5	7.0	4	14.0	0.96	0.37	0.19	0.35	180	200	212
	10'-6"	12	15	13	7	7.0	6	6.0	7	6.0	7	8.0	0	5	7.5	4	14.0	0.95	0.36	0.19	0.34	181	202	214
	12'-0"	13	16	14	7	7.0	6	6.5	7	6.0	6	6.0	0	5	8.5	4	14.0	0.95	0.32	0.20	0.33	182	204	216
	13'-7"	14	17	14	7	7.0	6	6.0	7	6.0	7	7.5	0	5	7.5	4	14.0	0.95	0.34	0.20	0.33	182	206	218
	15'-3"	14	17	15	7	7.5	6	6.5	7	6.0	7	8.0	0	5	8.5	4	14.0	0.95	0.34	0.20	0.32	183	206	218
	16'-10"	15	18	15	7	7.0	7	8.0	7	6.0	7	7.5	0	5	7.5	4	14.0	0.94	0.33	0.24	0.36	183	208	220
	18'-5"	15	19	16	7	7.0	7	8.0	8	7.5	7	7.5	0	5	8.5	4	14.0	0.94	0.33	0.24	0.37	184	209	221
	20'-0"	16	20	16	7	6.5	7	7.5	8	7.0	7	7.5	0	5	7.5	4	14.0	0.94	0.33	0.24	0.37	184	211	223
	21'-7"	17	21	17	7	6.5	7	7.5	8	7.0	7	7.5	0	5	8.0	4	14.0	0.93	0.33	0.24	0.37	185	213	225
	23'-1"	18	21	17	7	6.5	7	7.5	8	7.0	7	7.0	0	5	7.5	4	14.0	0.93	0.33	0.25	0.36	185	214	226
	24'-8"	19	22	18	7	6.5	7	7.5	8	7.0	7	7.0	0	5	7.5	4	14.0	0.93	0.33	0.25	0.37	186	216	228
	26'-3"	20	23	18	7	6.0	7	7.0	8	7.0	7	7.0	0	5	7.0	4	14.0	0.92	0.33	0.25	0.36	186	218	230
	27'-10"	20	24	19	7	6.0	7	7.0	8	7.0	7	7.0	0	5	7.5	4	14.0	0.92	0.32	0.25	0.37	187	219	231
	29'-5"	21	24	19	8	7.5	7	7.0	8	6.5	7	7.0	0	5	7.0	4	14.0	0.92	0.32	0.25	0.36	187	220	232
	31'-0"	22	25	20	8	7.5	7	7.0	8	6.5	7	7.0	0	5	7.0	4	14.0	0.92	0.32	0.25	0.36	188	222	234

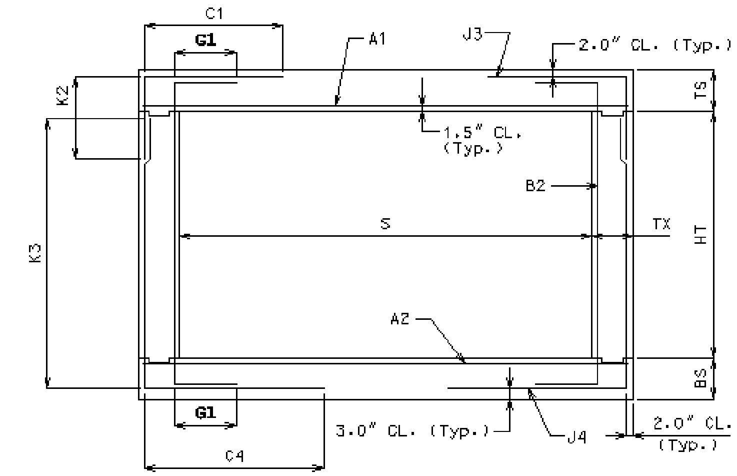

SECTION THRU BOX

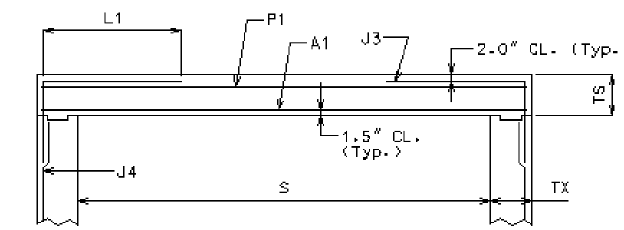

PART SECTION THRU BOX FOR MODIFIED J3 ALTERNATIVE
(B2 BAR NOT SHOWN FOR CLARITY)

NOTE: IF DESIGN FILL FALLS BETWEEN TABULATED FILLS, USE THE ADJACENT TABULATED FILL WHICH YIELDS THE GREATER MEMBER THICKNESS. IF THE MEMBER THICKNESSES ARE EQUAL, USE THE ADJACENT TABULATED FILL WHICH YIELDS THE GREATER AREA OF REINFORCEMENT.

SPECIAL DESIGNS ARE REQUIRED WHEN THE DESIGN FILL IS OUTSIDE THE RANGE OF TABULATED FILLS.

ALL DIMENSIONS ARE IN inch UNLESS OTHERWISE SPECIFIED

COEFFICIENTS: DIMENSIONS MARKED WITH C# OR K# ARE THE PRODUCT OF THE COEFFICIENT AND ITS ASSOCIATED MULTIPLIER.

DESIGN FILL HEIGHT GIVEN IN THE TABLES IS THE HEIGHT FROM THE TOP OF THE EARTH FILL OR ROADWAY TO THE TOP OF THE TOP SLAB.

ALL CULVERTS MEET STRENGTH REQUIREMENTS FOR MILITARY 24 kips TANDEM AXLE LOADING.

AT CONTRACTOR'S OPTION, A MODIFIED J3 ALTERNATIVE MAY BE UTILIZED WHEN THE DISTANCE BETWEEN THE ENDS OF J3 BARS AT TOP SLAB IS LESS THAN 2'-0". J3 BARS WITH HORIZONTAL LENGTH L1 (Instead of C1) MUST BE USED, WHERE L1 IS EQUAL TO 18", 22", AND 28" FOR #4, #5, AND #6 BARS, RESPECTIVELY. ADDITIONAL P1 BAR IS REQUIRED WITH THE MODIFIED J3 ALTERNATIVE AND MUST BE OF THE SAME SIZE AND SPACING AS J3 BAR WITH A LENGTH EQUAL TO A1 BAR. NO ADDITIONAL PAYMENT WILL BE MADE FOR THIS SUBSTITUTION.

MISSOURI HIGHWAY AND TRANSPORTATION COMMISSION

CONCRETE SINGLE BOX CULVERT

MEMBER SIZES AND REINFORCEMENT

(HS20 & HS20 MOD. LOADING)

DATE: | EFFECTIVE: 04-01-2002 | **703.15C**

Span (S) = 15 ft

HT (ft) = 12 or 13 or 14

	DESIGN FILL	MEMBER THICKNESSES			TOP SLAB BARS				BOTTOM SLAB BARS				WALL BARS					COEFFICIENTS (see note)				"C" Multiplier	"K" Multiplier		
		TS	BS	TX	A1 Bars		J3 Bars		A2 Bars		J4 Bars		B2 Bars			F Bars		J4		J3		S = 15 ft	HT = 12 ft	HT = 13 ft	HT = 14 ft
	(ft-in)	Thick	Thick.	Thick	Size	c to c	Size	c to c	Size	c to c	Size	c to c	G1	Size	c to c	Size	c to c	K3	C4	K2	C1	in	in	in	in
HS20	0'-8"	12	14	11	7	7.5	6	8.5	7	7.0	6	7.5	12	5	11.5	4	14.0	0.95	0.41	0.22	0.59	191	165	177	189
HS20	2'-3"	12	13	11	7	6.0	6	7.0	8	7.5	6	7.0	12	5	11.5	4	14.0	0.95	0.34	0.24	0.37	191	164	176	188
HS20	4'-0"	11	12	11	7	7.0	6	7.0	7	6.0	6	7.0	0	5	11.5	4	14.0	0.95	0.31	0.23	0.32	191	162	174	186
HS20	5'-8"	11	13	11	7	7.0	6	7.0	7	6.0	6	7.0	0	5	11.5	4	14.0	0.95	0.29	0.23	0.30	191	163	175	187
HS20	7'-3"	11	14	11	7	7.0	6	6.0	8	7.5	6	6.5	0	5	11.5	4	14.0	0.95	0.28	0.23	0.30	191	164	176	188
HS20 MOD	0'-7"	13	15	11	7	7.0	6	7.5	7	6.5	6	7.0	12	5	11.5	4	14.0	0.94	0.42	0.24	0.59	191	167	179	191
HS20 MOD	2'-1"	14	14	11	8	7.5	6	7.5	8	7.0	6	6.5	12	5	11.5	4	14.0	0.94	0.34	0.25	0.39	191	167	179	191
HS20 MOD	4'-0"	11	13	11	7	6.5	6	6.5	7	6.0	6	7.0	0	5	11.5	4	14.0	0.95	0.31	0.23	0.32	191	163	175	187
HS20 MOD	5'-8"	11	14	11	7	6.5	6	6.0	8	7.0	6	7.0	0	5	11.5	4	14.0	0.95	0.29	0.23	0.30	191	164	176	188
HS20 MOD	7'-2"	12	14	11	7	6.5	7	8.0	8	7.0	6	6.0	0	5	11.5	4	14.0	0.95	0.28	0.26	0.30	191	165	177	189
HS20 or HS20 MOD	8'-10"	12	15	11	7	6.5	7	7.5	8	7.0	6	6.0	0	5	11.5	4	14.0	0.95	0.27	0.28	0.31	191	166	178	190
HS20 or HS20 MOD	10'-5"	13	16	11	7	6.0	7	7.5	8	7.0	7	8.0	0	5	11.5	4	14.0	0.94	0.28	0.28	0.30	191	168	180	192
HS20 or HS20 MOD	11'-11"	14	16	12	7	6.0	7	7.5	8	7.0	7	8.0	0	5	11.5	4	14.0	0.94	0.28	0.29	0.30	192	169	181	193
HS20 or HS20 MOD	13'-7"	14	17	12	8	7.5	7	7.0	8	7.0	7	7.5	0	5	11.5	4	14.0	0.94	0.28	0.28	0.29	192	170	182	194
HS20 or HS20 MOD	15'-2"	15	18	13	8	7.5	7	7.0	8	7.0	7	8.0	0	5	11.5	4	14.0	0.93	0.28	0.29	0.32	193	172	184	196
HS20 or HS20 MOD	16'-10"	15	18	13	8	7.5	7	7.0	8	7.0	7	7.5	0	5	11.5	4	14.0	0.93	0.27	0.29	0.32	193	172	184	196
HS20 or HS20 MOD	18'-4"	16	19	14	8	7.5	7	7.0	8	7.0	7	7.5	0	5	11.0	4	14.0	0.93	0.27	0.29	0.32	194	174	186	198
HS20 or HS20 MOD	19'-11"	17	20	14	8	7.0	7	7.0	8	6.5	7	7.5	0	5	9.5	4	14.0	0.92	0.27	0.29	0.31	194	176	188	200
HS20 or HS20 MOD	21'-6"	18	21	15	8	7.0	7	7.0	8	6.5	7	7.5	0	5	11.0	4	14.0	0.92	0.27	0.29	0.31	195	178	190	202
HS20 or HS20 MOD	23'-0"	19	22	15	8	7.0	7	7.0	8	6.5	7	7.5	0	5	9.0	4	14.0	0.92	0.27	0.30	0.31	195	180	192	204
HS20 or HS20 MOD	24'-7"	20	23	16	8	7.0	7	7.0	8	6.5	7	7.5	0	5	9.5	4	14.0	0.91	0.27	0.30	0.31	196	182	194	206
HS20 or HS20 MOD	26'-2"	21	24	16	8	7.0	7	7.0	8	6.0	7	7.5	0	5	9.0	4	14.0	0.91	0.27	0.30	0.31	196	184	196	208
HS20 or HS20 MOD	27'-8"	22	25	17	8	6.5	7	7.0	8	6.0	7	7.5	0	5	9.0	4	14.0	0.90	0.27	0.30	0.31	197	186	198	210
HS20 or HS20 MOD	29'-4"	22	25	17	8	6.5	7	7.0	9	7.5	7	7.5	0	5	9.0	4	14.0	0.90	0.27	0.30	0.31	197	186	198	210
HS20 or HS20 MOD	30'-11"	23	26	17	8	6.5	7	7.0	9	7.0	7	7.0	0	5	8.0	4	14.0	0.90	0.26	0.30	0.31	197	188	200	212

SPAN (S) = 15 ft

HT (ft) = 15 or 16

	DESIGN FILL	MEMBER THICKNESSES			TOP SLAB BARS				BOTTOM SLAB BARS				WALL BARS					COEFFICIENTS (see note)				"C" Multiplier	"K" Multiplier	
		TS	BS	TX	A1 Bars		J3 Bars		A2 Bars		J4 Bars		B2 Bars			F Bars		J4		J3		S = 15 ft	HT = 15 ft	HT = 16 ft
	(ft-in)	Thick	Thick.	Thick	Size	c to c	Size	c to c	Size	c to c	Size	c to c	G1	Size	c to c	Size	c to c	K3	C4	K2	C1	in	in	in
HS20	0'-8"	12	14	12	7	7.5	6	8.0	7	7.0	6	7.0	12	5	9.5	4	14.0	0.95	0.56	0.20	0.59	192	201	213
HS20	2'-3"	12	13	12	7	6.0	6	7.0	7	6.0	6	7.0	12	5	9.0	4	14.0	0.95	0.40	0.20	0.49	192	200	212
HS20	4'-0"	11	13	12	7	7.5	6	7.0	7	6.0	6	6.5	0	5	9.0	4	14.0	0.96	0.37	0.19	0.38	192	199	211
HS20	5'-8"	11	13	12	7	7.0	6	7.0	8	7.5	6	6.0	0	5	8.5	4	14.0	0.96	0.34	0.19	0.35	192	199	211
HS20	7'-3"	11	14	12	7	7.0	6	6.0	8	7.5	7	8.0	0	5	8.5	4	14.0	0.96	0.35	0.19	0.33	192	200	212
HS20 MOD	0'-7"	13	15	12	7	7.0	6	7.5	7	6.0	6	6.5	12	5	10.0	4	14.0	0.95	0.61	0.20	0.59	192	203	215
HS20 MOD	2'-1"	14	14	12	8	7.5	6	7.0	8	7.0	6	6.5	12	5	9.0	4	14.0	0.94	0.40	0.20	0.59	192	203	215
HS20 MOD	4'-0"	11	13	12	7	7.0	6	7.0	8	7.5	6	6.5	0	5	9.0	4	14.0	0.96	0.37	0.19	0.38	192	199	211
HS20 MOD	5'-8"	11	14	12	7	7.0	6	6.0	8	7.5	6	6.0	0	5	8.5	4	14.0	0.96	0.35	0.19	0.35	192	200	212
HS20 MOD	7'-2"	12	15	12	7	7.0	6	6.0	8	7.0	7	7.5	0	5	8.5	4	14.0	0.95	0.35	0.20	0.34	192	202	214
HS20 or HS20 MOD	8'-10"	12	15	12	7	7.0	7	8.0	8	7.0	7	7.0	0	5	7.5	4	14.0	0.95	0.34	0.22	0.34	192	202	214
HS20 or HS20 MOD	10'-5"	13	16	13	7	7.0	7	8.0	8	7.0	7	7.5	0	5	8.5	4	14.0	0.95	0.33	0.23	0.32	193	204	216
HS20 or HS20 MOD	11'-11"	14	17	14	7	7.0	7	8.0	8	7.5	7	7.5	0	5	9.0	4	14.0	0.95	0.32	0.24	0.31	194	206	218
HS20 or HS20 MOD	13'-7"	14	18	14	7	6.0	7	7.0	8	7.0	7	7.5	0	5	8.5	4	14.0	0.95	0.32	0.24	0.33	194	207	219
HS20 or HS20 MOD	15'-2"	15	19	15	7	6.0	7	7.5	8	7.0	7	7.5	0	5	9.0	4	14.0	0.94	0.31	0.24	0.35	195	209	221
HS20 or HS20 MOD	16'-10"	15	19	15	7	6.0	7	7.0	8	7.0	7	7.0	0	5	9.0	4	14.0	0.94	0.31	0.24	0.35	195	209	221
HS20 or HS20 MOD	18'-4"	16	20	16	7	6.0	7	7.5	8	7.0	7	7.5	0	5	9.0	4	14.0	0.94	0.31	0.24	0.35	196	211	223
HS20 or HS20 MOD	19'-11"	17	21	16	7	6.0	7	7.0	8	7.0	7	7.0	0	5	8.5	4	14.0	0.93	0.30	0.24	0.35	196	213	225
HS20 or HS20 MOD	21'-6"	18	22	17	8	7.5	7	7.0	8	7.0	7	7.0	0	5	8.5	4	14.0	0.93	0.30	0.25	0.35	197	215	227
HS20 or HS20 MOD	23'-0"	19	22	17	8	7.5	7	7.0	8	6.5	7	7.0	0	5	8.5	4	14.0	0.93	0.30	0.25	0.34	197	216	228
HS20 or HS20 MOD	24'-7"	20	23	18	8	7.5	7	7.0	8	6.5	7	7.0	0	5	8.0	4	14.0	0.92	0.30	0.25	0.34	198	218	230
HS20 or HS20 MOD	26'-2"	21	24	18	8	7.0	7	7.0	8	6.5	7	7.0	0	5	8.5	4	14.0	0.92	0.30	0.25	0.34	198	220	232
HS20 or HS20 MOD	27'-8"	22	25	19	8	7.0	7	7.0	8	6.5	7	7.0	0	5	7.5	4	14.0	0.92	0.30	0.25	0.34	199	222	234
HS20 or HS20 MOD	29'-4"	22	26	19	8	7.0	7	6.5	8	6.0	7	7.0	0	5	7.0	4	14.0	0.92	0.30	0.25	0.34	199	223	235
HS20 or HS20 MOD	30'-11"	23	27	20	8	7.0	7	7.0	8	6.0	7	7.0	0	5	7.5	4	14.0	0.91	0.30	0.26	0.34	200	225	237

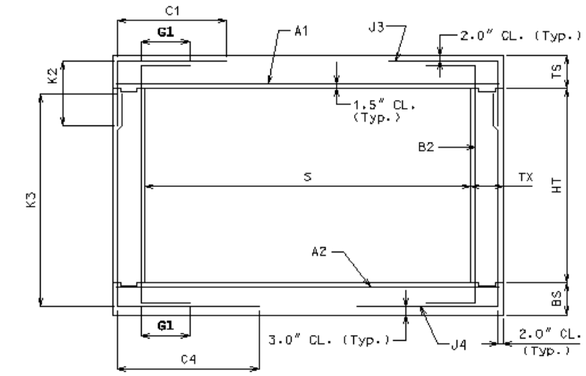

SECTION THRU BOX

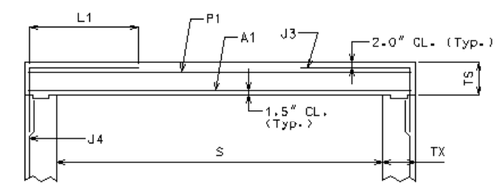

PART SECTION THRU BOX FOR MODIFIED J3 ALTERNATIVE

(B2 BAR NOT SHOWN FOR CLARITY)

NOTE: IF DESIGN FILL FALLS BETWEEN TABULATED FILLS, USE THE ADJACENT TABULATED FILL WHICH YIELDS THE GREATER MEMBER THICKNESS. IF THE MEMBER THICKNESSES ARE EQUAL, USE THE ADJACENT TABULATED FILL WHICH YIELDS THE GREATER AREA OF REINFORCEMENT.

SPECIAL DESIGNS ARE REQUIRED WHEN THE DESIGN FILL IS OUTSIDE THE RANGE OF TABULATED FILLS.

ALL DIMENSIONS ARE IN inch UNLESS OTHERWISE SPECIFIED.

COEFFICIENTS: DIMENSIONS MARKED WITH C# OR K# ARE THE PRODUCT OF THE COEFFICIENT AND ITS ASSOCIATED MULTIPLIER.

DESIGN FILL HEIGHT GIVEN IN THE TABLES IS THE HEIGHT FROM THE TOP OF THE EARTH FILL OR ROADWAY TO THE TOP OF THE TOP SLAB.

ALL CULVERTS MEET STRENGTH REQUIREMENTS FOR MILITARY 24 kips TANDEM AXLE LOADING.

AT CONTRACTOR'S OPTION, A MODIFIED J3 ALTERNATIVE MAY BE UTILIZED WHEN THE DISTANCE BETWEEN THE ENDS OF J3 BARS AT TOP SLAB IS LESS THAN 2'-0". J3 BARS WITH HORIZONTAL LENGTH L1 (Instead of C1) MUST BE USED, WHERE L1 IS EQUAL TO 18", 22", AND 28" FOR #4, #5, AND #6 BARS, RESPECTIVELY. ADDITIONAL P1 BAR IS REQUIRED WITH THE MODIFIED J3 ALTERNATIVE AND MUST BE OF THE SAME SIZE AND SPACING AS J3 BAR WITH A LENGTH EQUAL TO A1 BAR. NO ADDITIONAL PAYMENT WILL BE MADE FOR THIS SUBSTITUTION.

MISSOURI HIGHWAY AND TRANSPORTATION COMMISSION

CONCRETE SINGLE BOX CULVERT

MEMBER SIZES AND REINFORCEMENT

(HS20 & HS20 MOD. LOADING)

DATE: | EFFECTIVE: 04-01-2002 | **703.15C** | 12/13

Span (S) = 16 ft
HT (ft) = 13 or 14

	DESIGN FILL	MEMBER THICKNESSES			TOP SLAB BARS				BOTTOM SLAB BARS				WALL BARS					COEFFICIENTS (see note)				"C" Multiplier	"K" Multiplier	
		TS	BS	TX	A1	Bars	J3	Bars	A2	Bars	J4	Bars		B2	Bars	F	Bars	J4		J3		S = 16 ft	HT = 13 ft	HT = 14 ft
	(ft-in)	Thick	Thick.	Thick	Size	c to c	Size	c to c	Size	c to c	Size	c to c	G1	Size	c to c	Size	c to c	K3	C4	K2	C1	in	in	in
HS20	0'-8"	12	14	11	7	7.0	6	7.5	7	6.5	6	7.0	12	5	11.5	4	14.0	0.95	0.38	0.22	0.49	203	177	189
HS20	2'-3"	12	13	11	8	7.5	6	6.5	8	7.5	6	6.5	12	5	11.5	4	14.0	0.95	0.31	0.22	0.34	203	176	188
HS20	4'-0"	11	13	11	7	6.5	6	6.5	8	7.0	6	6.5	0	5	11.5	4	14.0	0.95	0.29	0.22	0.30	203	175	187
HS20	5'-8"	11	13	11	7	6.5	6	6.0	8	7.0	6	6.5	0	5	11.5	4	14.0	0.95	0.27	0.22	0.29	203	175	187
HS20	7'-2"	12	14	11	7	6.5	7	8.0	8	7.0	6	6.0	0	5	11.5	4	14.0	0.95	0.26	0.26	0.28	203	177	189
HS20 MOD	0'-6"	14	15	11	7	7.0	6	8.0	7	6.0	6	7.0	12	5	11.5	4	14.0	0.94	0.38	0.23	0.59	203	180	192
HS20 MOD	2'-1"	14	14	11	8	7.0	6	7.0	8	7.0	6	6.0	12	5	11.5	4	14.0	0.94	0.31	0.23	0.35	203	179	191
HS20 MOD	3'-11"	12	13	11	7	6.0	6	6.5	8	7.0	6	6.5	0	5	11.5	4	14.0	0.95	0.29	0.22	0.30	203	176	188
HS20 MOD	5'-7"	12	14	11	7	6.0	6	6.0	8	7.0	6	6.5	0	5	11.5	4	14.0	0.95	0.27	0.22	0.28	203	177	189
HS20 MOD	7'-2"	12	15	11	7	6.0	7	7.5	8	7.0	6	6.0	0	5	11.5	4	14.0	0.95	0.26	0.26	0.30	203	178	190
HS20 or HS20 MOD	8'-9"	13	15	11	8	7.5	7	7.0	8	6.5	7	7.5	0	5	11.5	4	14.0	0.94	0.27	0.26	0.29	203	179	191
HS20 or HS20 MOD	10'-5"	13	16	11	8	7.0	7	6.5	8	6.5	7	7.5	0	5	11.5	4	14.0	0.94	0.26	0.26	0.28	203	180	192
HS20 or HS20 MOD	11'-11"	14	17	12	8	7.0	7	7.0	8	6.5	7	7.5	0	5	11.5	4	14.0	0.94	0.26	0.27	0.28	204	182	194
HS20 or HS20 MOD	13'-6"	15	18	12	8	7.0	7	7.0	8	6.5	7	7.5	0	5	11.5	4	14.0	0.93	0.25	0.27	0.30	204	184	196
HS20 or HS20 MOD	15'-1"	16	19	13	8	7.0	7	7.0	8	6.5	7	7.5	0	5	11.5	4	14.0	0.93	0.25	0.27	0.30	205	186	198
HS20 or HS20 MOD	16'-8"	17	20	13	8	7.0	7	7.0	8	6.0	7	7.5	0	5	11.5	4	14.0	0.92	0.25	0.27	0.29	205	188	200
HS20 or HS20 MOD	18'-3"	17	20	14	8	7.0	7	7.0	8	6.0	7	7.5	0	5	11.5	4	14.0	0.92	0.25	0.27	0.30	206	188	200
HS20 or HS20 MOD	19'-10"	18	21	14	8	7.0	7	7.0	8	6.0	7	7.0	0	5	11.0	4	14.0	0.92	0.25	0.28	0.29	206	190	202
HS20 or HS20 MOD	21'-5"	19	22	15	8	7.0	7	7.0	8	6.0	7	7.5	0	5	11.5	4	14.0	0.92	0.25	0.28	0.29	207	192	204
HS20 or HS20 MOD	22'-11"	20	23	15	8	6.5	7	7.0	8	6.0	7	7.0	0	5	11.0	4	14.0	0.91	0.25	0.28	0.29	207	194	206
HS20 or HS20 MOD	24'-6"	21	24	15	8	6.5	7	6.5	9	7.0	7	7.0	0	5	9.0	4	14.0	0.91	0.24	0.28	0.29	207	196	208
HS20 or HS20 MOD	26'-1"	22	25	16	8	6.5	7	7.0	9	7.0	7	7.0	0	5	10.0	4	14.0	0.90	0.25	0.28	0.29	208	198	210
HS20 or HS20 MOD	27'-7"	23	26	16	8	6.0	7	7.0	9	7.0	7	7.0	0	5	9.0	4	14.0	0.90	0.24	0.29	0.28	208	200	212
HS20 or HS20 MOD	29'-2"	24	27	17	8	6.0	7	7.0	9	7.0	7	7.5	0	5	9.0	4	14.0	0.90	0.25	0.29	0.29	209	202	214
HS20 or HS20 MOD	30'-9"	25	28	17	8	6.0	7	6.5	9	7.0	7	7.5	0	5	9.0	4	14.0	0.90	0.24	0.29	0.29	209	204	216

SPAN (S) = 16 ft
HT (ft) = 15 or 16

	DESIGN FILL	MEMBER THICKNESSES			TOP SLAB BARS				BOTTOM SLAB BARS				WALL BARS					COEFFICIENTS (see note)				"C" Multiplier	"K" Multiplier	
		TS	BS	TX	A1	Bars	J3	Bars	A2	Bars	J4	Bars		B2	Bars	F	Bars	J4		J3		S = 16 ft	HT = 15 ft	HT = 16 ft
	(ft-in)	Thick	Thick.	Thick	Size	c to c	Size	c to c	Size	c to c	Size	c to c	G1	Size	c to c	Size	c to c	K3	C4	K2	C1	in	in	in
HS20	0'-8"	12	14	12	7	7.0	6	7.5	7	6.0	6	7.0	12	5	9.5	4	14.0	0.95	0.46	0.20	0.59	204	201	213
HS20	2'-3"	12	14	12	8	7.5	6	6.5	8	7.0	6	6.0	12	5	9.5	4	14.0	0.95	0.38	0.20	0.41	204	201	213
HS20	4'-0"	11	13	12	7	7.0	6	6.5	8	7.5	6	6.0	0	5	9.0	4	14.0	0.96	0.34	0.19	0.35	204	199	211
HS20	5'-8"	11	14	12	7	7.0	6	6.0	8	7.0	6	6.0	0	5	9.0	4	14.0	0.96	0.32	0.19	0.32	204	200	212
HS20	7'-2"	12	15	12	7	6.5	7	8.0	8	7.0	7	7.0	0	5	9.0	4	14.0	0.95	0.32	0.23	0.31	204	202	214
HS20 MOD	0'-6"	14	16	12	7	7.0	6	7.5	8	7.5	6	6.5	12	5	10.5	4	14.0	0.95	0.49	0.20	0.59	204	205	217
HS20 MOD	2'-1"	14	15	12	8	7.0	6	6.5	8	7.0	6	6.0	12	5	10.0	4	14.0	0.94	0.38	0.20	0.46	204	204	216
HS20 MOD	3'-11"	12	14	12	7	6.0	6	6.5	8	7.0	6	6.0	0	5	9.0	4	14.0	0.95	0.34	0.20	0.35	204	201	213
HS20 MOD	5'-7"	12	14	12	7	6.5	6	6.0	8	7.0	7	8.0	0	5	9.0	4	14.0	0.95	0.34	0.20	0.33	204	201	213
HS20 MOD	7'-2"	12	15	12	7	6.0	7	7.5	8	7.0	7	7.5	0	5	9.0	4	14.0	0.95	0.32	0.23	0.33	204	202	214
HS20 or HS20 MOD	8'-9"	13	16	12	7	6.5	7	7.0	8	7.0	7	7.0	0	5	8.5	4	14.0	0.95	0.31	0.23	0.32	204	204	216
HS20 or HS20 MOD	10'-5"	13	17	13	7	6.0	7	7.0	8	6.5	7	7.0	0	5	9.0	4	14.0	0.95	0.30	0.23	0.32	205	205	217
HS20 or HS20 MOD	11'-11"	14	17	13	7	6.0	7	7.0	8	6.5	7	7.0	0	5	9.0	4	14.0	0.95	0.30	0.24	0.31	205	206	218
HS20 or HS20 MOD	13'-6"	15	18	14	8	7.5	7	7.0	8	6.5	7	7.0	0	5	9.5	4	14.0	0.94	0.29	0.24	0.33	206	208	220
HS20 or HS20 MOD	15'-1"	16	19	15	8	7.5	7	7.0	8	6.5	7	7.0	0	5	10.5	4	14.0	0.94	0.29	0.24	0.33	207	210	222
HS20 or HS20 MOD	16'-8"	17	20	15	8	7.0	7	7.0	8	6.5	7	7.0	0	5	9.5	4	14.0	0.93	0.29	0.24	0.33	207	212	224
HS20 or HS20 MOD	18'-3"	17	21	16	8	7.5	7	7.0	8	6.5	7	7.0	0	5	10.5	4	14.0	0.93	0.28	0.24	0.33	208	213	225
HS20 or HS20 MOD	19'-10"	18	22	16	8	7.0	7	7.0	8	6.0	7	7.0	0	5	9.0	4	14.0	0.93	0.28	0.25	0.32	208	215	227
HS20 or HS20 MOD	21'-5"	19	23	17	8	7.0	7	7.0	8	6.0	7	7.0	0	5	7.5	4	14.0	0.93	0.28	0.25	0.32	209	217	229
HS20 or HS20 MOD	22'-11"	20	24	17	8	7.0	7	6.5	8	6.0	7	7.0	0	5	8.5	4	14.0	0.92	0.28	0.25	0.32	209	219	231
HS20 or HS20 MOD	24'-6"	21	25	18	8	7.0	7	7.0	8	6.0	7	7.0	0	5	7.0	4	14.0	0.92	0.28	0.25	0.32	210	221	233
HS20 or HS20 MOD	26'-1"	22	25	18	8	6.5	7	6.5	9	7.0	7	6.5	0	5	8.0	4	14.0	0.92	0.28	0.25	0.32	210	222	234
HS20 or HS20 MOD	27'-7"	23	26	19	8	6.5	7	6.5	9	7.0	7	7.0	0	5	7.0	4	14.0	0.91	0.28	0.26	0.32	211	224	236
HS20 or HS20 MOD	29'-2"	24	27	19	8	6.5	7	6.5	9	7.0	7	6.5	0	5	7.5	4	14.0	0.91	0.28	0.26	0.31	211	226	238
HS20 or HS20 MOD	30'-10"	24	28	20	8	6.0	7	6.0	9	7.0	7	7.0	0	5	7.0	4	14.0	0.91	0.28	0.26	0.32	212	227	239

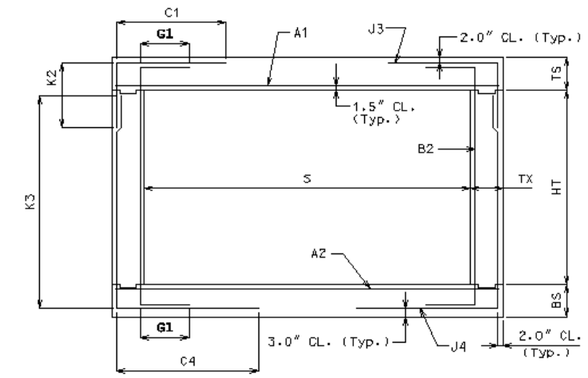

SECTION THRU BOX

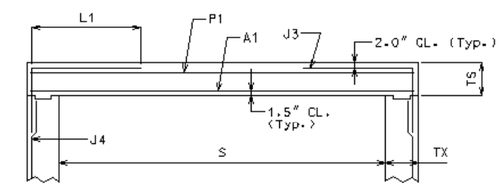

PART SECTION THRU BOX FOR MODIFIED J3 ALTERNATIVE
(B2 BAR NOT SHOWN FOR CLARITY)

NOTE: IF DESIGN FILL FALLS BETWEEN TABULATED FILLS, USE THE ADJACENT TABULATED FILL WHICH YIELDS THE GREATER MEMBER THICKNESS. IF THE MEMBER THICKNESSES ARE EQUAL, USE THE ADJACENT TABULATED FILL WHICH YIELDS THE GREATER AREA OF REINFORCEMENT.

SPECIAL DESIGNS ARE REQUIRED WHEN THE DESIGN FILL IS OUTSIDE THE RANGE OF TABULATED FILLS.

ALL DIMENSIONS ARE IN inch UNLESS OTHERWISE SPECIFIED.

COEFFICIENTS: DIMENSIONS MARKED WITH C# OR K# ARE THE PRODUCT OF THE COEFFICIENT AND ITS ASSOCIATED MULTIPLIER.

DESIGN FILL HEIGHT GIVEN IN THE TABLES IS THE HEIGHT FROM THE TOP OF THE EARTH FILL OR ROADWAY TO THE TOP OF THE TOP SLAB.

ALL CULVERTS MEET STRENGTH REQUIREMENTS FOR MILITARY 24 kips TANDEM AXLE LOADING.

AT CONTRACTOR'S OPTION, A MODIFIED J3 ALTERNATIVE MAY BE UTILIZED WHEN THE DISTANCE BETWEEN THE ENDS OF J3 BARS AT TOP SLAB IS LESS THAN 2'-0". J3 BARS WITH HORIZONTAL LENGTH L1 (Instead of C1) MUST BE USED, WHERE L1 IS EQUAL TO 18", 22", AND 28" FOR #4, #5, AND #6 BARS, RESPECTIVELY. ADDITIONAL P1 BAR IS REQUIRED WITH THE MODIFIED J3 ALTERNATIVE AND MUST BE OF THE SAME SIZE AND SPACING AS J3 BAR WITH A LENGTH EQUAL TO A1 BAR. NO ADDITIONAL PAYMENT WILL BE MADE FOR THIS SUBSTITUTION.

MISSOURI HIGHWAY AND TRANSPORTATION COMMISSION

CONCRETE SINGLE BOX CULVERT
MEMBER SIZES AND REINFORCEMENT
(HS20 & HS20 MOD. LOADING)

DATE: | EFFECTIVE: 04-01-2002 | 703.15C | 13/13