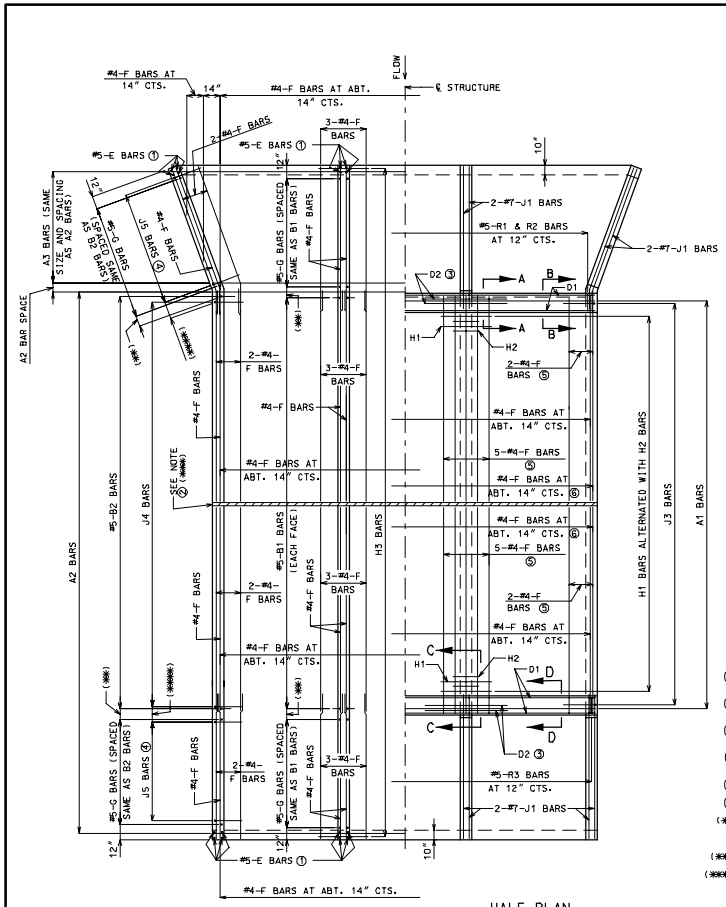

HALF HORIZONTAL SECTION

HALF PLAN

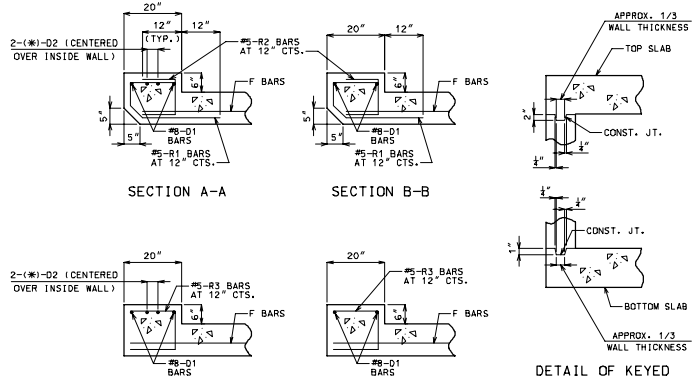

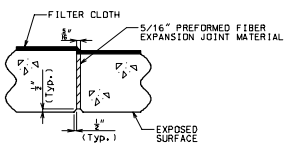

DETAIL OF TRANSVERSE JOINT THRU BARREL OF CULVERT

① UPSTREAM = 3'-5"
DOWNSTREAM = 4'-0"

② IF MORE THAN ONE TRANSVERSE JOINT IS REQUIRED, SEE STANDARD SHEET 703.82 FOR DETAILS.

③ D2 BAR LENGTH EACH SIDE OF ℄ WALLS = 48 BAR DIAMETERS OR 1/4 (CLEAR SPAN) (USE GREATER).

④ FOR DETAILS AND REINFORCEMENT IN WINGS, SEE STANDARD SHEET 703.37.

⑤ USE THESE BARS FOR DESIGN FILLS OF MORE THAN 2'-0".

⑥ USE THESE BARS FOR DESIGN FILLS OF 2'-0" OR LESS.

(✱) #8 (10'-0" < CLEAR SPAN ≤ 13'-0")
#9 (13'-0" < CLEAR SPAN)
OTHERWISE D2 BAR SHALL NOT BE USED.

(✱✱) VARIES - 12" MAXIMUM

(✱✱✱) USE TRANSVERSE JOINT WHEN BARREL IS OVER 80 FEET LONG BETWEEN HEADWALLS.

USE ADDITIONAL TRANSVERSE JOINTS TO PROVIDE 50 FEET MAXIMUM SPACING BETWEEN JOINTS.

DISTANCE BETWEEN INSIDE FACE OF HEADWALL AND TRANSVERSE JOINT SHALL NOT BE LESS THAN 3'-0".

(✱✱✱✱) J4 BAR SPACING

GENERAL NOTES:

DESIGN UNIT STRESSES:
CLASS B-1 CONCRETE, f'_c = 4,000 psi
REINFORCING STEEL (GRADE 60), fy = 60,000 psi

ALL DIMENSIONS SHOWN ARE IN INCH UNLESS OTHERWISE NOTED.

FOR DIMENSIONS AND SIZE AND SPACING OF REINFORCING STEEL, SEE STANDARD SHEET 703.85.

LAP ALL LONGITUDINAL BARS A MINIMUM OF 23" AT SPLICES.

MINIMUM CLEARANCE TO REINFORCING STEEL SHALL BE 1-1/2" UNLESS OTHERWISE SHOWN.

PREFORMED FIBER EXPANSION JOINT MATERIAL SHALL BE SECURELY STITCHED TO ONE FACE OF THE CONCRETE WITH NO. 10 GAGE COPPER WIRE OR NO. 12 GAGE SOFT DRAWN GALVANIZED STEEL WIRE.

BEVELED HEADWALL TO BE LOCATED AT UPSTREAM END.

A FILTER CLOTH 3 FEET IN WIDTH AND DOUBLE THICKNESS SHALL BE APPLIED TO ALL TRANSVERSE JOINTS IN THE TOP SLAB AND SIDEWALLS. THE MATERIAL SHALL BE CENTERED ON THE JOINT AND THE EDGES SEALED WITH A MASTIC OR WITH TWO SIDED TAPE. THE FILTER CLOTH SHALL BE A GEOTEXTILE MEETING THE APPROVAL OF THE ENGINEER AND HAVING A GRAB TENSILE STRENGTH OF 180 LBS. (ASTM D-4632) AND AN APPARENT OPENING SIZE OF 50 TO 100 (ASTM D-4751). COST OF FURNISHING AND INSTALLING THE FILTER CLOTH WILL BECONSIDERED COMPLETELY COVERED BY THE CONTRACT UNIT PRICE FOR OTHER ITEMS.

FOR MORE DETAILS AND SECTION THROUGH BOX, SEE 703.81 SHEET 2 OF 2.

MISSOURI HIGHWAY AND TRANSPORTATION COMMISSION			
	CONCRETE TRIPLE BOX STRUCTURE FLARED WINGS (SQUARE)		
DATE: _____	EFFECTIVE: 07-01-2004	703.81F	1/2

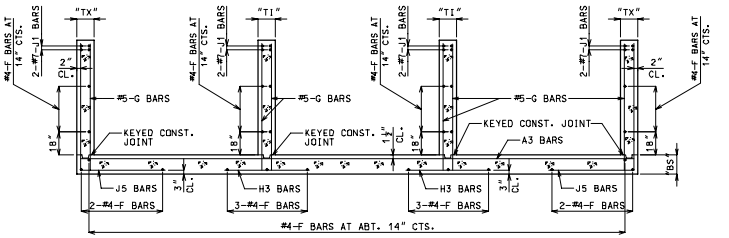

SECTION THRU WINGS (UPSTREAM SHOWN)

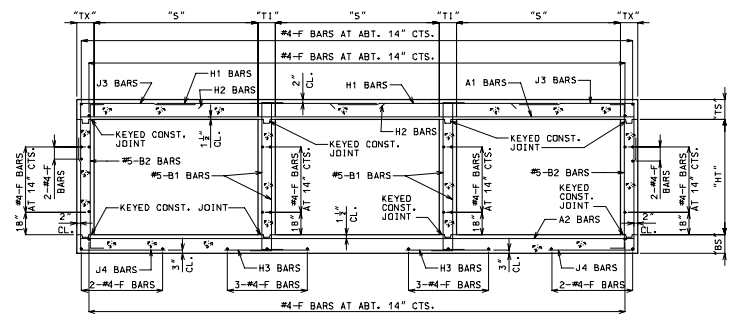

SECTION THRU BOX (DESIGN FILLS 2'-0" OR LESS)

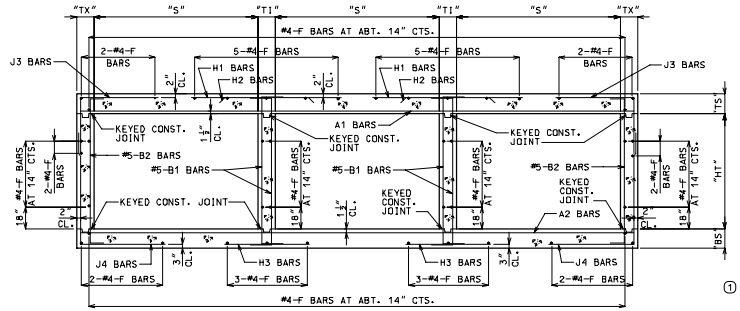

SECTION THRU BOX (DESIGN FILLS OVER 2'-0")

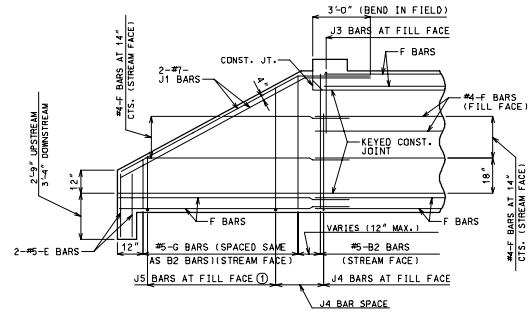

ELEVATION OF EXTERIOR WING
(UPSTREAM SHOWN)

NOTE: CONSTRUCTION JOINT KEY OMITTED FOR CLARITY.

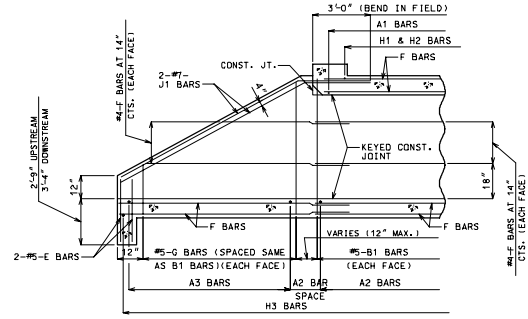

SECTION NEAR INTERIOR WING
(UPSTREAM SHOWN)

GENERAL NOTES:

ALL DIMENSIONS SHOWN ARE IN INCH UNLESS OTHERWISE NOTED.

J1 BARS MAY BE BENT IN FIELD OR SHOP.

MINIMUM CLEARANCE TO REINFORCING STEEL SHALL BE 1-1/2" UNLESS OTHERWISE SHOWN.

FOR DIMENSIONS AND SIZE AND SPACING OF REINFORCING STEEL, SEE STANDARD SHEET 703.85.

1 FOR DETAILS OF REINFORCEMENT IN WINGS, SEE STANDARD SHEET 703.37.

MISSOURI HIGHWAY AND TRANSPORTATION COMMISSION			
	CONCRETE TRIPLE BOX STRUCTURE FLARED WINGS (SQUARE)		
DATE: _____	EFFECTIVE: 07-01-2004	703.81F	2/2