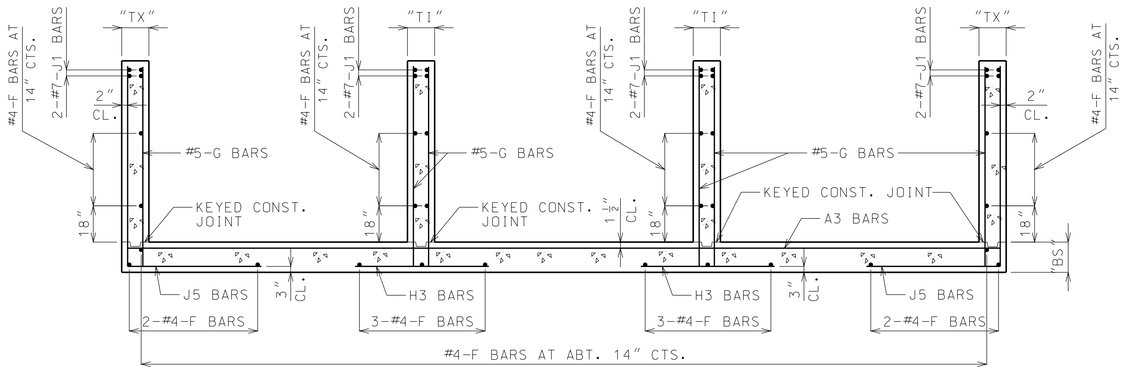

SECTION THRU WINGS (UPSTREAM SHOWN)

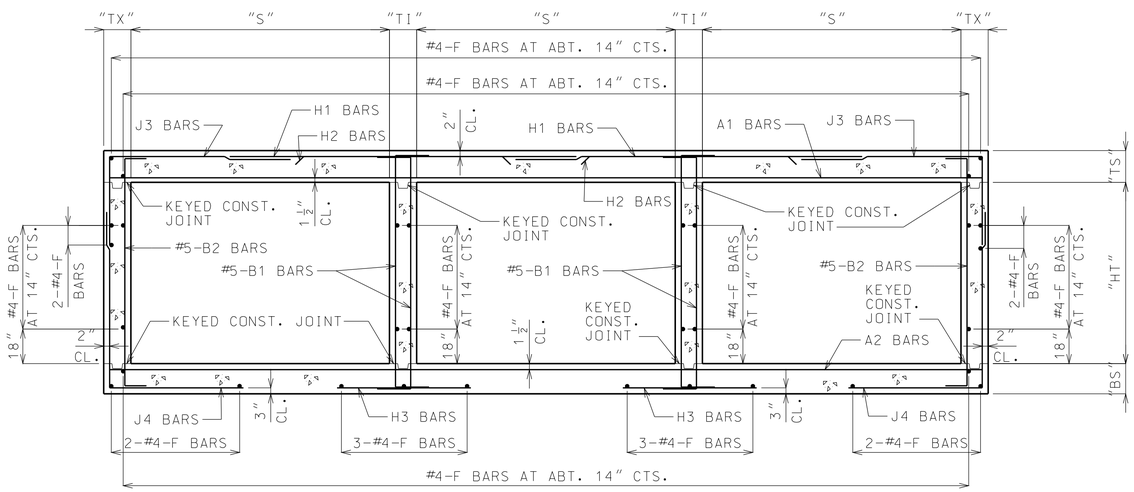

SECTION THRU BOX (DESIGN FILLS 2'-0" OR LESS)

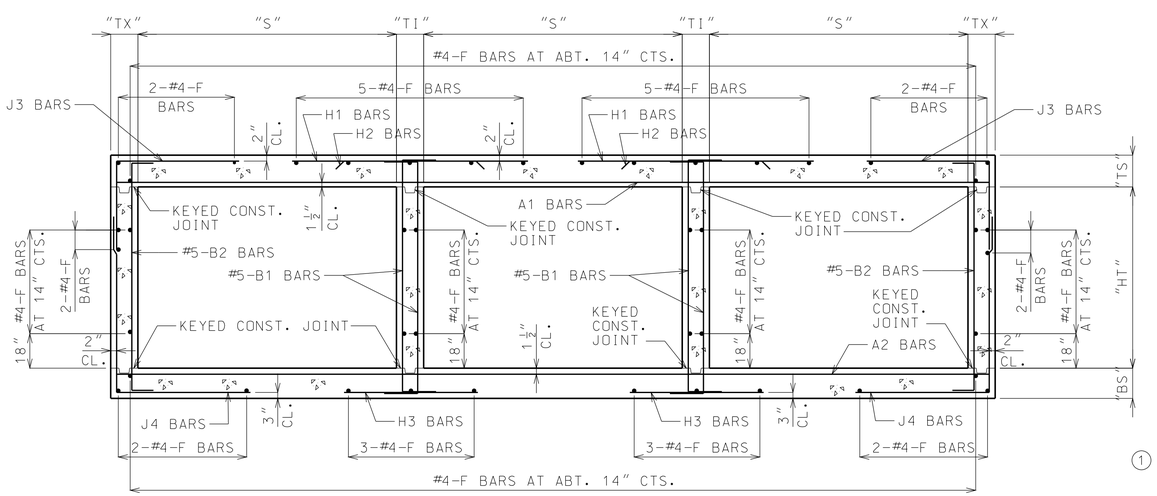

SECTION THRU BOX (DESIGN FILLS OVER 2'-0")

NOTE: CONSTRUCTION JOINT KEY OMITTED FOR CLARITY.

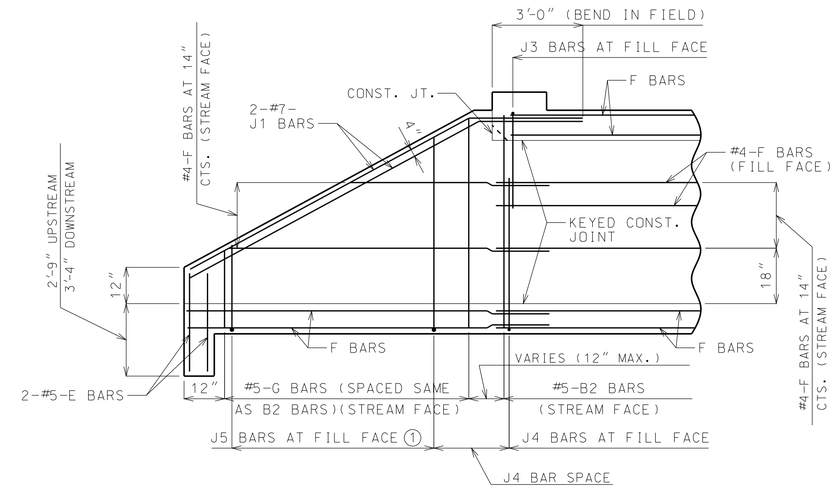

ELEVATION OF EXTERIOR WING
(UPSTREAM SHOWN)

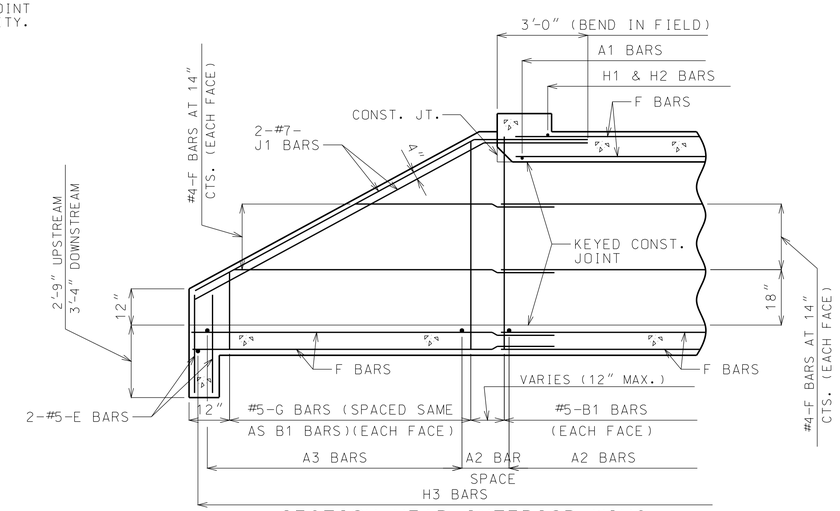

SECTION NEAR INTERIOR WING
(UPSTREAM SHOWN)

GENERAL NOTES:

ALL DIMENSIONS SHOWN ARE IN INCH UNLESS OTHERWISE NOTED.

J1 BARS MAY BE BENT IN FIELD OR SHOP.

MINIMUM CLEARANCE TO REINFORCING STEEL SHALL BE 1-1/2" UNLESS OTHERWISE SHOWN.

FOR DIMENSIONS AND SIZE AND SPACING OF REINFORCING STEEL, SEE STANDARD SHEET 703.85.

(1) FOR DETAILS OF REINFORCEMENT IN WINGS, SEE STANDARD SHEET 703.37.

MISSOURI HIGHWAYS AND TRANSPORTATION COMMISSION
105 WEST CAPITOL
JEFFERSON CITY, MO 65102
1-888-ASK-MODOT (1-888-275-6636)

STATE OF MISSOURI
DENNIS W. HECKMAN
NUMBER PE-27141
PROFESSIONAL ENGINEER

THIS SHEET HAS BEEN SIGNED, SEALED AND DATED ELECTRONICALLY.

CONCRETE TRIPLE BOX STRUCTURE

FLARED WINGS (SKEWED)

DATE EFFECTIVE: 10/01/2009
DATE PREPARED: 8/18/2009

703.84G

SHEET NO. 2 OF 2

IF A SEAL IS PRESENT ON THIS SHEET IT HAS BEEN ELECTRONICALLY SEALED AND DATED.