DETAIL OF TRANSVERSE JOINT THRU BARREL OF CULVERT

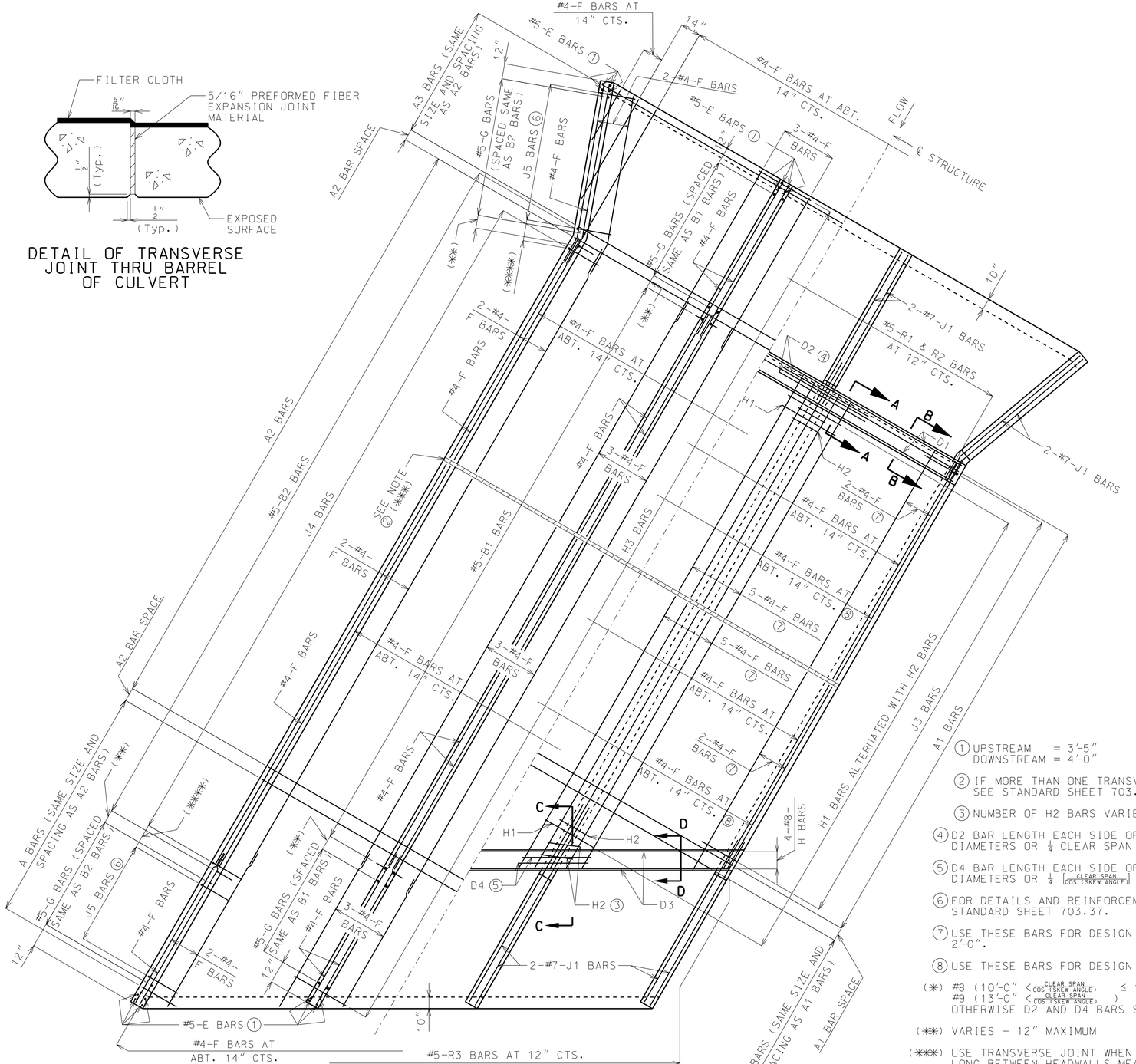

HALF HORIZONTAL SECTION

HALF PLAN

(LEFT ADVANCE SKEW SHOWN)
(RIGHT ADVANCE SKEW OPPOSITE HAND)

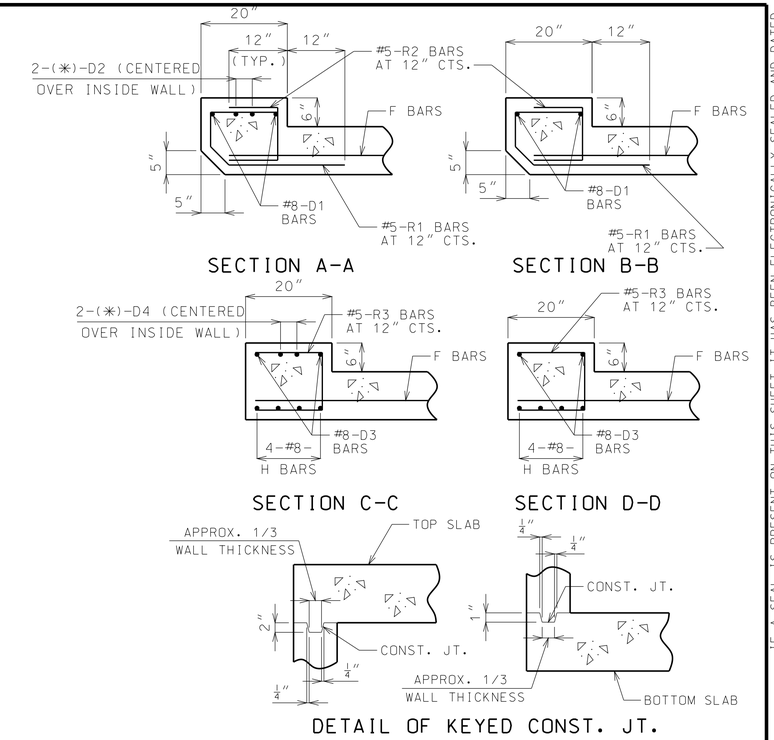

DETAIL OF KEYED CONST. JT.

GENERAL NOTES:

DESIGN UNIT STRESSES:
CLASS B-1 CONCRETE, f'c = 4,000 psi
REINFORCING STEEL (GRADE 60), fy = 60,000 psi

ALL DIMENSIONS SHOWN ARE IN INCH UNLESS OTHERWISE NOTED.

FOR DIMENSIONS AND SIZE AND SPACING OF REINFORCING STEEL, SEE STANDARD SHEET 703.85.

LAP ALL LONGITUDINAL BARS A MINIMUM OF 23" AT SPLICES.

MINIMUM CLEARANCE TO REINFORCING STEEL SHALL BE 1-1/2" UNLESS OTHERWISE SHOWN.

PREFORMED FIBER EXPANSION JOINT MATERIAL SHALL BE SECURELY STITCHED TO ONE FACE WITH NO. 10 GAGE COPPER WIRE OR NO. 12 GAGE SOFT DRAWN GALVANIZED STEEL WIRE.

BEVELED HEADWALL TO BE LOCATED AT UPSTREAM END.

A FILTER CLOTH 3 FEET IN WIDTH AND DOUBLE THICKNESS SHALL BE APPLIED TO ALL TRANSVERSE JOINTS IN THE TOP SLAB AND SIDEWALLS. THE MATERIAL SHALL BE CENTERED ON THE JOINT AND THE EDGES SEALED WITH A MASTIC OR WITH TWO SIDED TAPE. THE FILTER CLOTH SHALL BE A GEOTEXTILE MEETING SEC 1011 FOR SUBSURFACE DRAINAGE. COST OF FURNISHING AND INSTALLING THE FILTER CLOTH WILL BE CONSIDERED COMPLETELY COVERED BY THE CONTRACT UNIT PRICE FOR OTHER ITEMS .

FOR MORE DETAILS AND SECTION THROUGH BOX, SEE 703.84 SHEET 2 OF 2.

① UPSTREAM = 3'-5"
DOWNSTREAM = 4'-0"

② IF MORE THAN ONE TRANSVERSE JOINT IS REQUIRED, SEE STANDARD SHEET 703.82 FOR DETAILS.

③ NUMBER OF H2 BARS VARIES WITH SKEW.

④ D2 BAR LENGTH EACH SIDE OF ℄ WALLS = 48 BAR DIAMETERS OR ¼ CLEAR SPAN (USE GREATER).

⑤ D4 BAR LENGTH EACH SIDE OF ℄ WALLS = 48 BAR DIAMETERS OR ¼ [CLEAR SPAN / (COS (SKEW ANGLE))] (USE GREATER).

⑥ FOR DETAILS AND REINFORCEMENT IN WINGS, SEE STANDARD SHEET 703.37.

⑦ USE THESE BARS FOR DESIGN FILLS OF MORE THAN 2'-0".

⑧ USE THESE BARS FOR DESIGN FILLS OF 2'-0" OR LESS.

(✱) #8 (10'-0" < CLEAR SPAN / (COS (SKEW ANGLE)) ≤ 13'-0")
#9 (13'-0" < CLEAR SPAN / (COS (SKEW ANGLE)))
OTHERWISE D2 AND D4 BARS SHALL NOT BE USED.

(✱✱) VARIES - 12" MAXIMUM

(✱✱✱) USE TRANSVERSE JOINT WHEN BARREL IS OVER 80 FEET LONG BETWEEN HEADWALLS MEASURED ALONG ℄ OF BOX.

USE ADDITIONAL TRANSVERSE JOINTS TO PROVIDE 50 FEET MAXIMUM SPACING BETWEEN JOINTS.

DISTANCE BETWEEN INSIDE FACE OF HEADWALL AND TRANSVERSE JOINT SHALL NOT BE LESS THAN 3'-0".

(✱✱✱✱) J4 BAR SPACING

MISSOURI HIGHWAYS AND TRANSPORTATION COMMISSION
105 WEST CAPITOL
JEFFERSON CITY, MO 65102
1-888-ASK-MODOT (1-888-275-6636)

STATE OF MISSOURI
DENNIS W. HECKMAN
NUMBER PE-27141
PROFESSIONAL ENGINEER
THIS SHEET HAS BEEN SIGNED, SEALED AND DATED ELECTRONICALLY.

CONCRETE TRIPLE BOX STRUCTURE

FLARED WINGS (SKEWED)

DATE EFFECTIVE: 10-01-2009
DATE PREPARED: 8/18/2009

703.84G

SHEET NO. 1 OF 2

IF A SEAL IS PRESENT ON THIS SHEET IT HAS BEEN ELECTRONICALLY SEALED AND DATED.