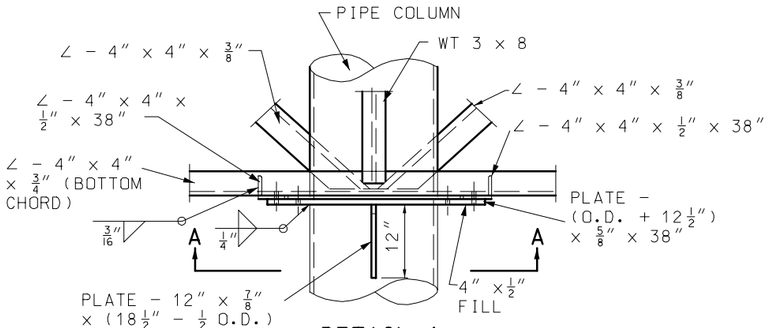

DETAIL 1
TRUSS BOTTOM CONNECTION TO COLUMN

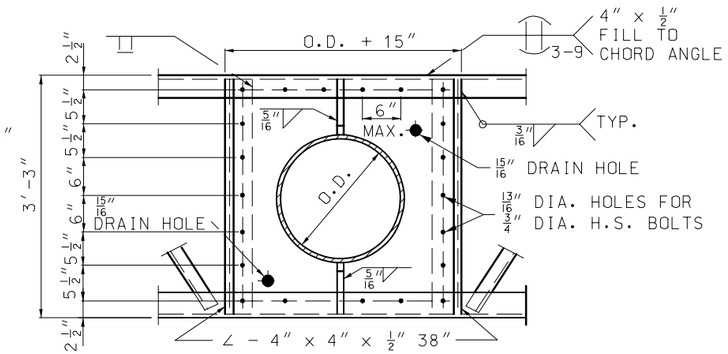

SECTION A-A

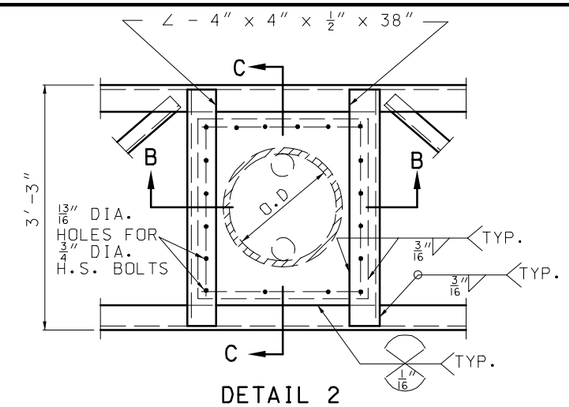

DETAIL 2
TRUSS TOP CONNECTION TO COLUMN

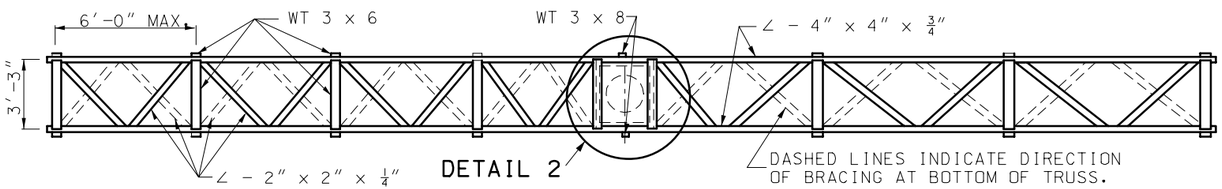

PLAN

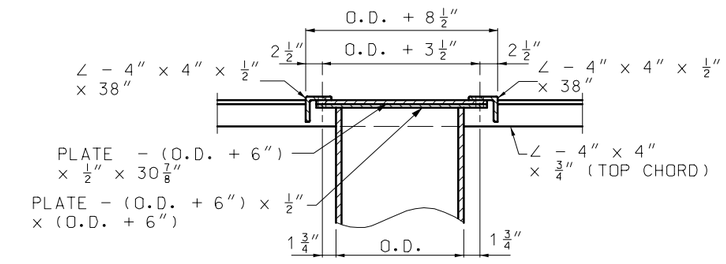

SECTION B-B

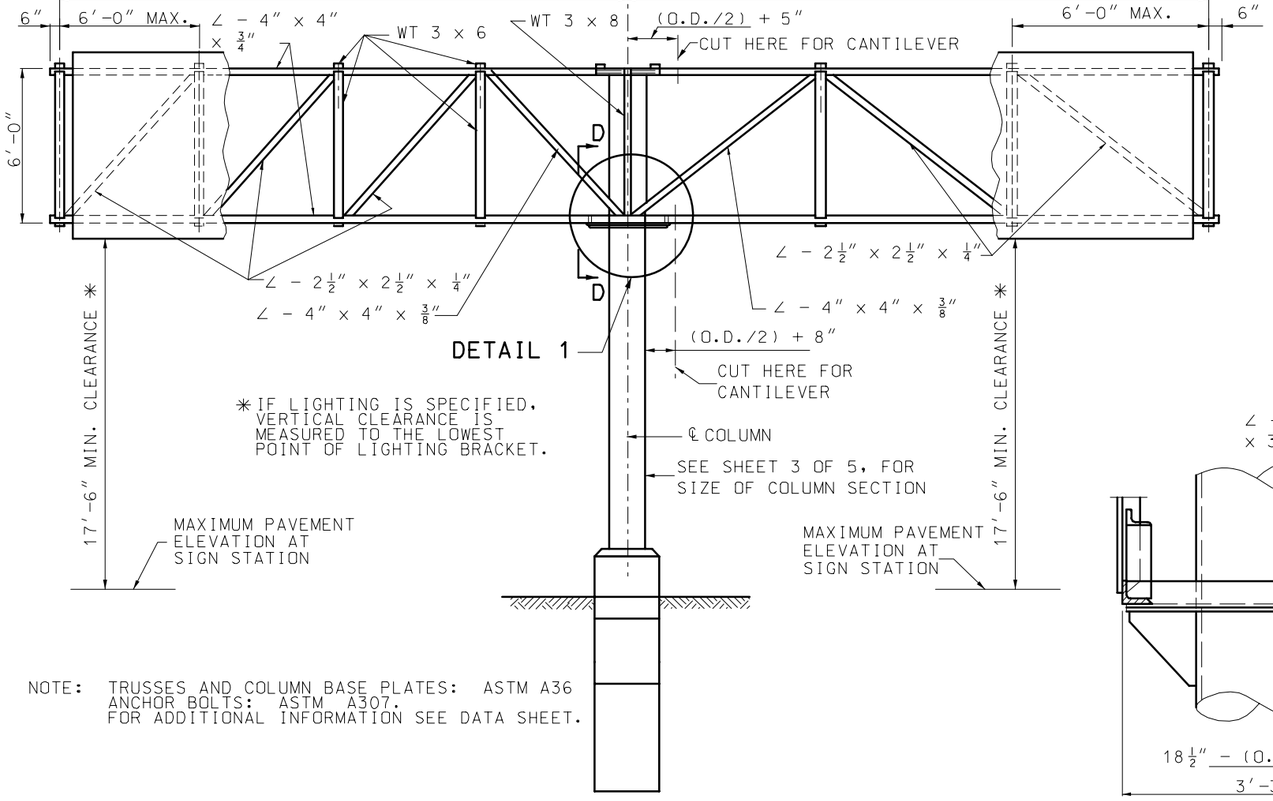

NOTE: TRUSSES AND COLUMN BASE PLATES: ASTM A36
ANCHOR BOLTS: ASTM A307.
FOR ADDITIONAL INFORMATION SEE DATA SHEET.

ELEVATION

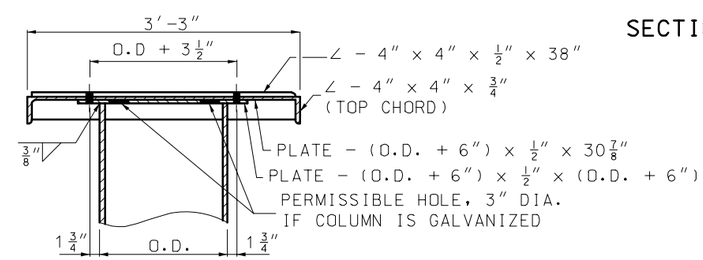

SECTION C-C

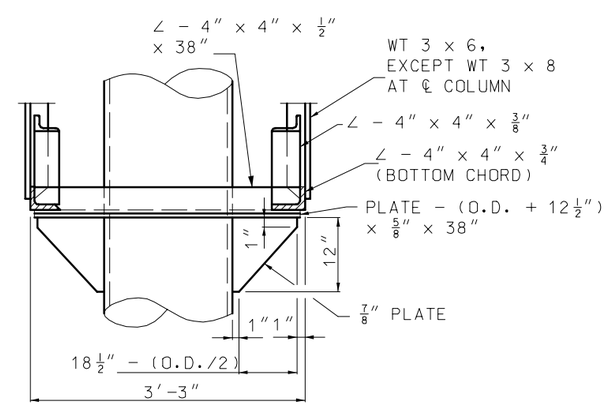

SECTION D-D

GENERAL NOTES:

ALL FASTENERS SHALL HAVE A HARDENED WASHER UNDER THE NUT OR BOLT HEAD, WHICHEVER IS TURNED IN TIGHTENING.

ZINC CHROMATE PRIMER SHALL MEET THE REQUIREMENTS OF FEDERAL SPECIFICATION TT-P-645 OR TT-P-1757 AND SHALL BE ACCEPTED ON THE BASIS OF THE LABEL SHOWING CONFORMANCE OR A MANUFACTURER'S CERTIFICATION.

DESIGN OF STRUCTURAL SUPPORTS SHALL COMPLY WITH AASHTO STANDARD SPECIFICATIONS FOR STRUCTURAL SUPPORTS FOR HIGHWAY SIGNS, LUMINAIRES AND TRAFFIC SIGNALS 2001 AND CURRENT INTERIMS.

MISSOURI HIGHWAYS AND TRANSPORTATION COMMISSION

OVERHEAD SIGN TRUSSES
BUTTERFLY & CANTILEVER
STRUCTURAL STEEL

DATE:_____ | EFFECTIVE: 06-01-2006 | **903.12V** | 1/5

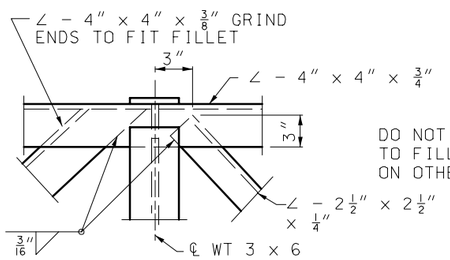

DETAIL 1

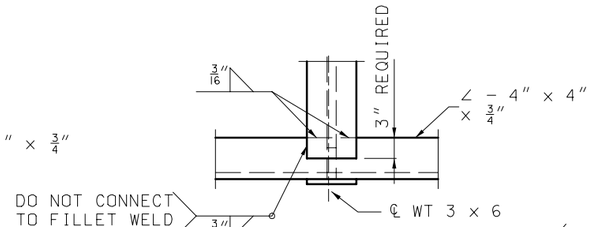

DETAIL 2

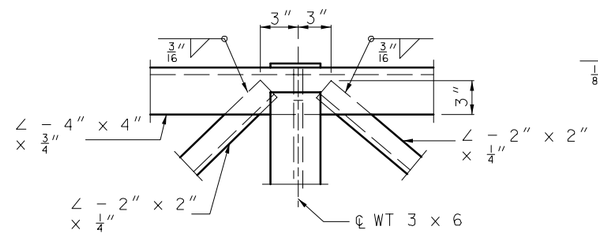

DETAIL 3

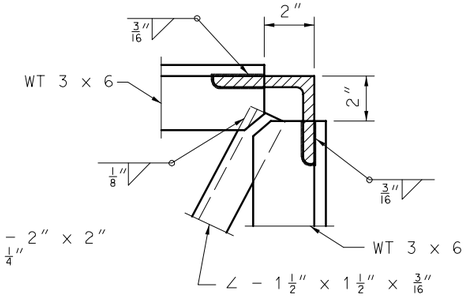

DETAIL 4

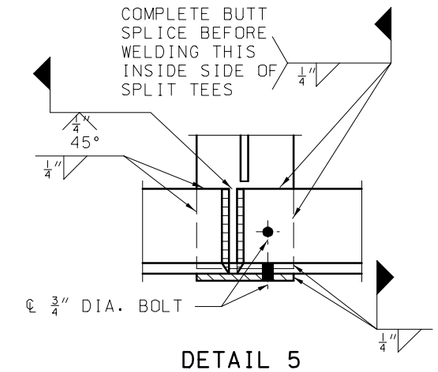

DETAIL 5

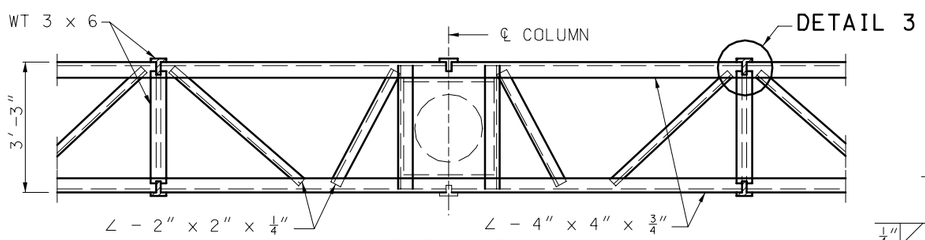

SECTION B–B

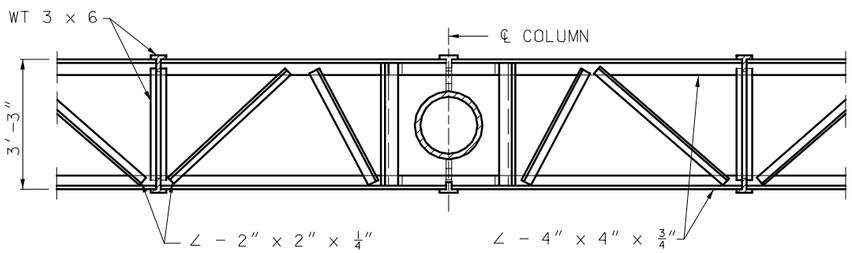

SECTION C–C

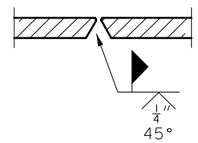

SECTION D–D

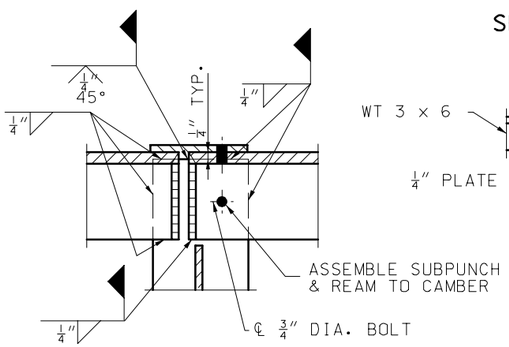

SECTION F–F

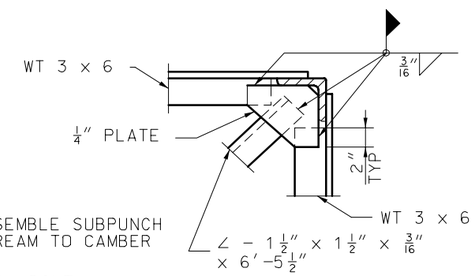

SECTION E–E
(SPLICE ONLY)

NOTE: 3/4″ DIA. BOLTS SHALL BE REMOVED AFTER WELDING IS COMPLETE. BOLT HOLES SHALL BE PLUGGED AND THE OUTSIDE FACE GROUND SMOOTH.

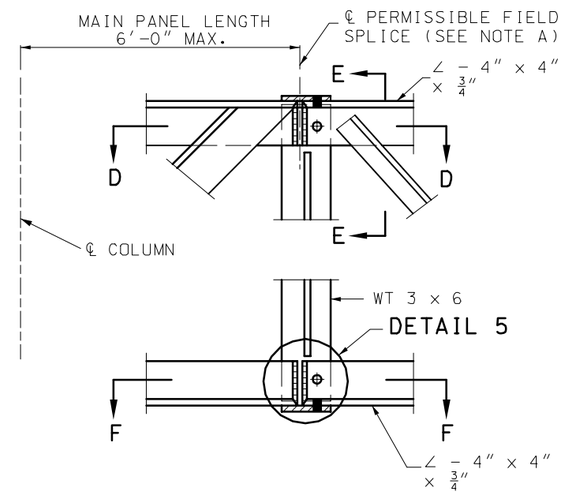

LOCATION OF FIELD SPLICE

NOTE A: SPLICING CHORD ANGLES IN THE SHOP AND THE FIELD SPLICE SHOWN IN THIS SHEET WILL NOT BE ALLOWED WITHOUT SPECIAL PERMISSION. IF PERMISSION IS GRANTED SUCH SPLICES SHALL BE LOCATED AT THE CENTER LINE OF MAIN PANEL POINT NEXT TO COLUMN.

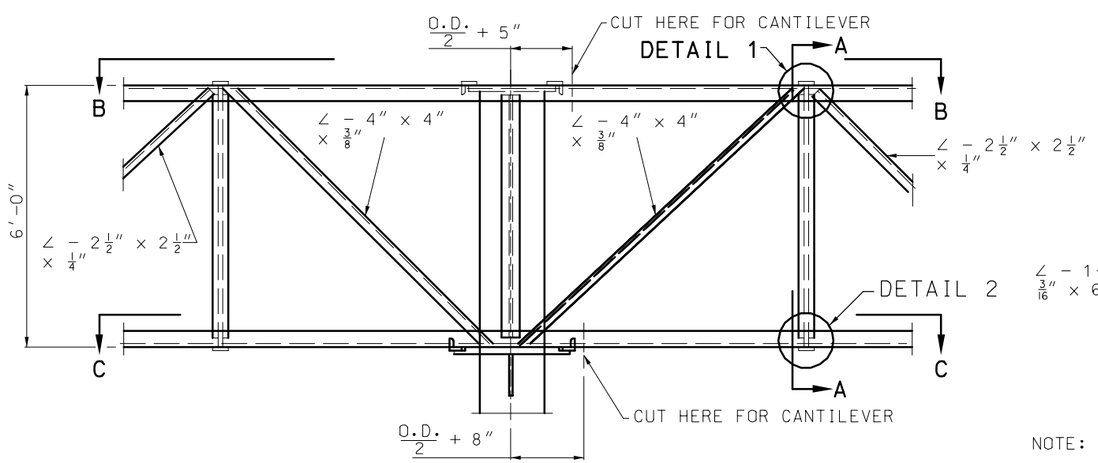

PART ELEVATION OF BUTTERFLY TRUSS

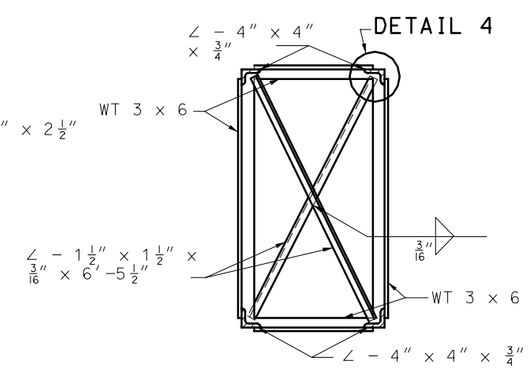

SECTION A–A

NOTE: SHRINK ∠ – 1 1/2″ × 1 1/2″ × 3/16″ IF NECESSARY TO TAKE UP DISTORTIONAL SLACK.

MISSOURI HIGHWAYS AND TRANSPORTATION COMMISSION

OVERHEAD SIGN TRUSSES
BUTTERFLY & CANTILEVER
STRUCTURAL STEEL

DATE:_____ EFFECTIVE: 06-01-2006 **903.12V** 2/5

POST TYPE	PIPE COLUMN D.D.	PIPE COLUMN WEIGHT LBS.	DIMENSION "E"	SPLIT	BASE PLATE SIZE✱✱	ANCHOR BOLT NO.	ANCHOR BOLT DIA.	FA (ft)	FB (ft)	FC (ft)	FD (ft)	FH (ft)	COLLAR REINFORCEMENT MOMENT-C1 BARS	MOMENT-C1 SPACING	SHEAR-C2 BARS	SHEAR-C2 SPACING	SKIN-C3 BARS	SKIN-C3 SPACING	SHAFT REINFORCEMENT LONGITUDINAL S1 QUANTITY	LONGITUDINAL S1 BARS	SHEAR-S2 BARS	SHEAR-S2 SPACING	REBAR TOTAL (lb)	CONCRETE CU. YDS
III	18"	93.45	8 1/2"	0"	2'-8" x 2'-8" x 1 3/4"	10	2"	4.0	7.5	1.5	4.5	14.0	#6	6"	#4	12"	#4	12"	19	#10	#5	6"	2091	12.4
IV	20"	104.13	8 1/2"	0"	2'-10" x 2'-10" x 2"	10	2 1/4"	4.0	7.5	1.5	4.5	14.0	#6	6"	#4	12"	#4	12"	19	#10	#5	6"	2091	12.4
V	18"	93.45	8 1/2"	7"	3'-3" x 2'-8" x 2"	10	2 1/4"	5.0	13.5	4.0	5.5	17.0	#6	6"	#4	12"	#4	12"	22	#11	#6	6"	3901	26.5
VI	20"	104.13	8 1/2"	8"	3'-6' x 2'-10" x 2 1/4"	10	2 1/4"	5.0	14.0	4.0	6.0	18.0	#6	6"	#4	12"	#4	12"	27	#11	#6	6"	4742	31.8
VII	24"	125.49	9"	8"	3'-10" x 3'-2" x 2 1/4"	10	2 1/2"	5.0	14.0	4.0	6.0	18.0	#6	6"	#4	12"	#4	12"	27	#11	#6	6"	4742	31.8
VIII	26"	136.17	9"	8"	4'-2" x 3'-4" x 3"	10	2 1/2"	4.0	12.5	3.0	6.5	20.0	#6	6"	#4	12"	#4	12"	31	#11	#6	6"	5532	34.8

✱✱ BASE PLATES, PEDESTAL, AND FOUNDATIONS, LONGER SIDES SHALL BE NORMAL TO AXIS OF SIGN.

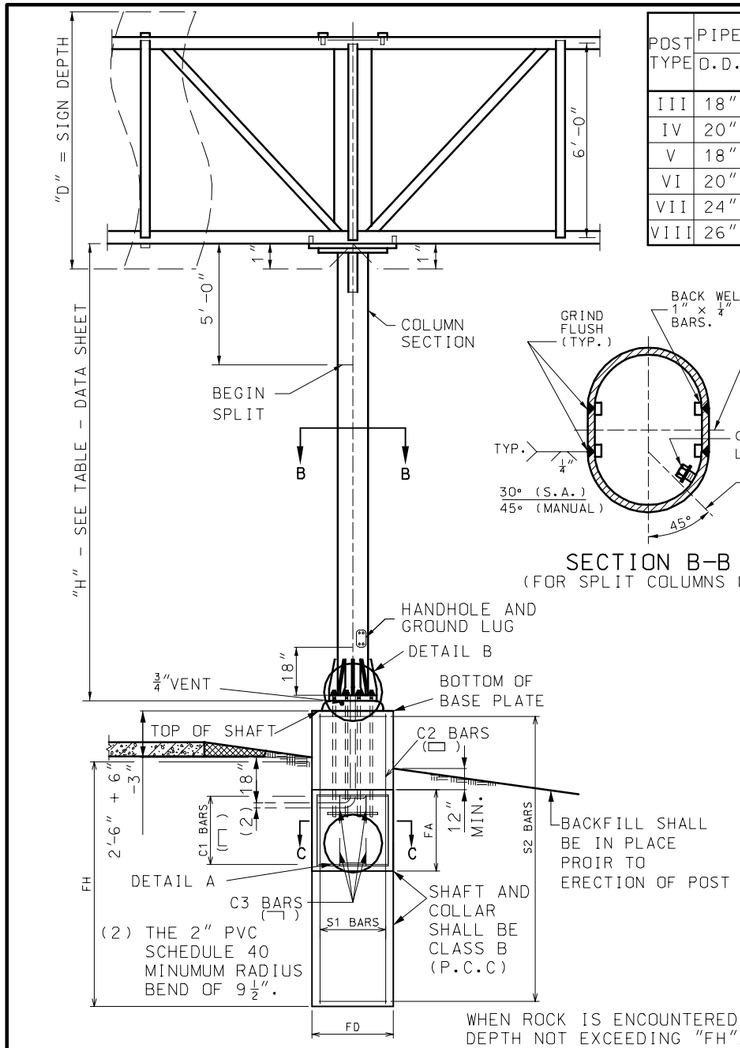

ELEVATION

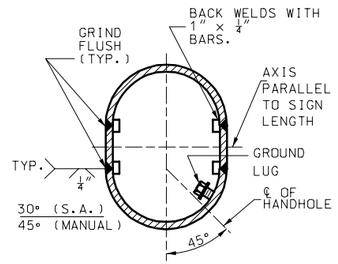

SECTION B-B
(FOR SPLIT COLUMNS ONLY)

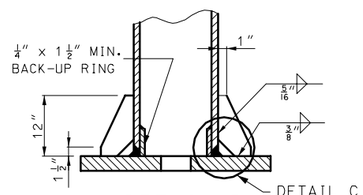

DETAIL B
(SECTION VIEW SHOWN)

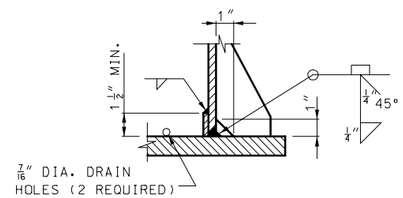

DETAIL C

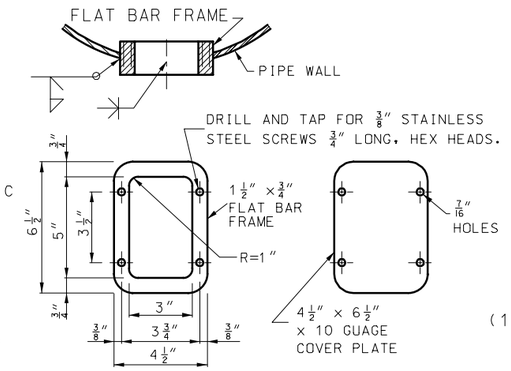

HANDHOLE AND COVER DETAILS

NOTE:
HANDHOLE REQUIRED ONLY IN POWER COLUMN.

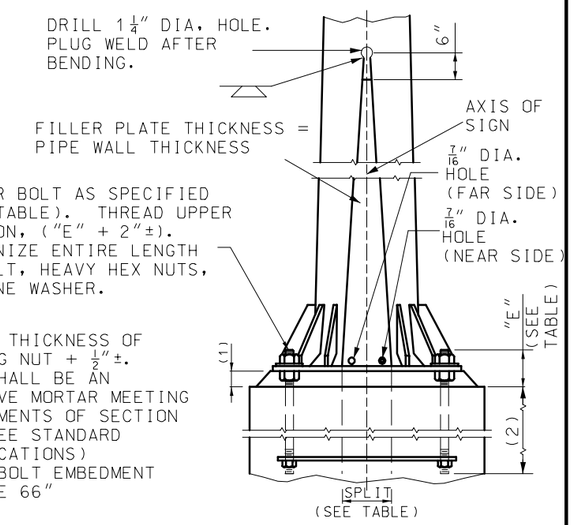

(1) GROUT = THICKNESS OF LEVELING NUT + 1/2"±. GROUT SHALL BE AN EXPANSIVE MORTAR MEETING REQUIREMENTS OF SECTION 1066 (SEE STANDARD SPECIFICATIONS)
(2) ANCHOR BOLT EMBEDMENT SHALL BE 66"

PART ELEVATION

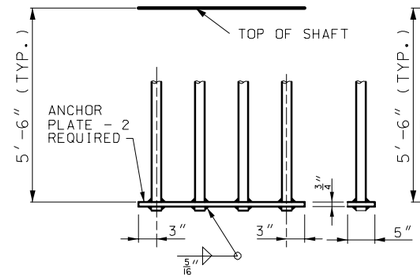

DETAIL A
ANCHORAGE

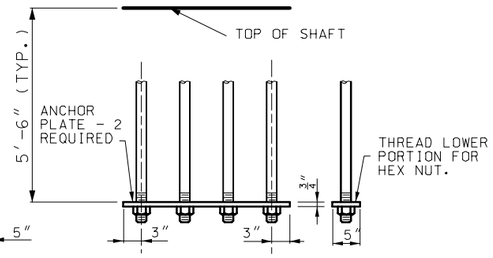

DETAIL A
OPTIONAL ANCHORAGE

(BOTH DETAILS ARE SHOWN FOR 4 BOLTS - SIMILAR FOR 3 BOLTS)

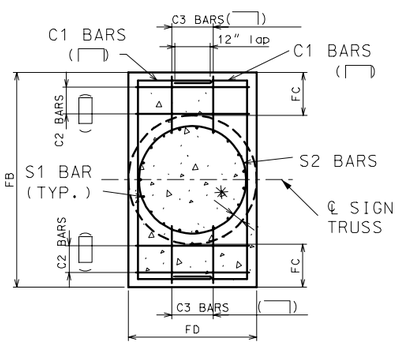

SECTION C-C
(TYPICAL SECTION SHOWING REINFORCING STEEL)

✱ 4" CLEAR FOR FD ≤ 4'-0"
6" CLEAR FOR FD > 4'-0"

WHEN ROCK IS ENCOUNTERED AT A DEPTH NOT EXCEEDING "FH"/2 FOR FD > 3' OR "FH"/4 FOR FD ≤ 3', THE DIMENSION "FH" MAY BE ADJUSTED TO A MINIMUM OF 3 x "FD", SUBJECT TO APPROVALBY THE ENGINEER.

CONTACT THE ENGINEER IF WATER TABLE IS ENCOUNTERED DURING EXCAVATION.

VERTICAL LEG OF C3 BARS SHALL BE PLACED INSIDE SHAFT S2 BARS.

TYPICAL BASE PLATE (10 ANCHOR TYPE) BUTTERFLY AND CANTILEVER (B.C.)	III	IV	V	VI	VII	VIII
A	8"	9"	8"	9"	10 1/2"	11"
B	10"	10"	10"	10"	11"	12"
C	32"	34"	32"	34"	38"	40"
D	13"	14"	16 1/2"	18"	20"	22"
E	32"	34"	39"	42"	46"	50"
F	6"	6"	6"	6"	6"	6"

NOTE:
FOR DETAILS OF ALTERNATE PEDESTAL, SEE SHEET NO. 4 OF 5.

ANCHOR BOLTS AND PLATE NOT SHOWN.

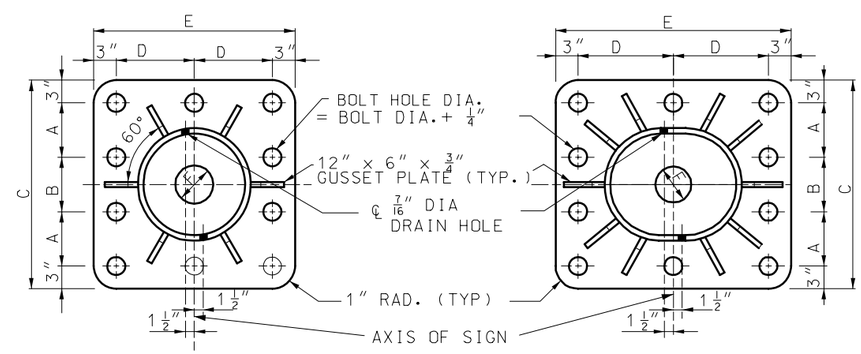

III AND IV B.C.

V, VI, AND VII B.C.

TYPICAL BASE PLATES

GENERAL NOTES:

MINIMUM CLEARANCE TO REINFORCEMENT IS 3" EXCEPT AS SHOWN.

ASTM A 106 GRADE B STEEL PIPE OR A TAPERED TUBE OF EQUIVALENT SIZE AND THICKNESS MAY BE SUBSTITUTED FOR PIPE POST.

ALL STEEL PIPE COLUMNS SHALL BE EITHER GRADE "B" SEAMLESS STEEL PIPE OR GRADE "B" ELECTRIC RESISTANCE WELDED STEEL PIPE; A.S.T.M. SPECIFICATION A53.

ALL STRUCTURES SHALL BE GROUNDED.

BURR THREADS ON ALL ANCHOR BOLTS.

A HORIZONTAL WELDED SPLICE MAY BE FABRICATED IN THE COLUMN BETWEEN THE TOP OF PIPE AND 4'-0" BELOW THE BOTTOM CHORDS OF THE TRUSS WHEN DETAILED ON THE SHOP DRAWINGS AND APPROVED BY THE ENGINEER.

GROUND LUGS SHALL BE LOCATED INSIDE COLUMN NEAR HAND HOLE.

MISSOURI HIGHWAYS AND TRANSPORTATION COMMISSION

OVERHEAD SIGN TRUSSES
BUTTERFLY & CANTILEVER
STRUCTURAL STEEL

DATE:_____ | EFFECTIVE: 06-01-2006 | **903.12V** | 3/5

POST TYPE	PIPE COLUMN O.D.	PIPE COLUMN WEIGHT LBS.	DIMENSION "E"	SPLIT	BASE PLATE SIZE✱✱	ANCHOR BOLT NO.	ANCHOR BOLT DIA.	C (ft)	FA (ft)	FB (ft)	FC (ft)	FD (ft)	FH (ft)	COLLAR REINFORCEMENT MOMENT-C1 BARS	MOMENT-C1 LENGTH	SHEAR-C2 BARS	SHEAR-C2 LENGTH	SKIN-C3 BARS	SKIN-C3 LENGTH	SHAFT REINFORCEMENT LONGITUDINAL S1 QUANTITY	LONGITUDINAL S1 BARS	SHEAR-S2 BARS	SHEAR-S2 LENGTH	REBAR TOTAL (lb) TYPE A	REBAR TOTAL (lb) TYPE C	CONCRETE CU.YDS TYPE A	CONCRETE CU.YDS TYPE C
III	18"	93.45	8½"	0"	2'-8" x 2'-8" x 1¾"	10	2"	2'-10"	4.0	7.5	1.5	4.5	14.0	#6	6"	#4	12"	#4	12"	19	#10	#5	6"	2031	2042	13.4	14.5
IV	20"	104.13	8½"	0"	2'-10" x 2'-10" x 2"	10	2¼"	3'-0"	4.0	7.5	1.5	4.5	14.0	#6	6"	#4	12"	#4	12"	19	#10	#5	6"	2031	2042	13.5	14.6
V	18"	93.45	8½"	7"	3'-3" x 2'-8" x 2"	10	2¼"	2'-10"	5.0	13.5	4.0	5.5	17.0	#6	6"	#4	12"	#4	12"	22	#11	#6	6"	3763	3782	28.8	30.7
VI	20"	104.13	8½"	8"	3'-6' x 2'-10" x 2¼"	10	2¼"	3'-0"	5.0	14.0	4.0	6.0	18.0	#6	6"	#4	12"	#4	12"	27	#11	#6	6"	4528	4547	34.1	36.2
VII	24"	125.49	9"	8"	3'-10" x 3'-2" x 2¼"	10	2½"	3'-4"	5.0	14.0	4.0	6.0	18.0	#6	6"	#4	12"	#4	12"	27	#11	#6	6"	4528	4547	34.5	36.8
VIII	26"	136.17	9"	8"	4'-2" x 3'-4" x 3"	10	2½"	3'-6"	4.0	12.5	3.0	6.5	20.0	#6	6"	#4	12"	#4	12"	31	#11	#6	6"	5242	5259	36.7	38.7

✱✱ BASE PLATES, PEDESTAL, AND FOUNDATIONS, LONGER SIDES SHALL BE NORMAL TO AXIS OF SIGN.

✱ 4" CLEAR FOR FD ≤ 4'-0"
6" CLEAR FOR FD > 4'-0"
VERTICAL LEG OF C3 BARS SHALL BE PLACED INSIDE SHAFT S2 BARS

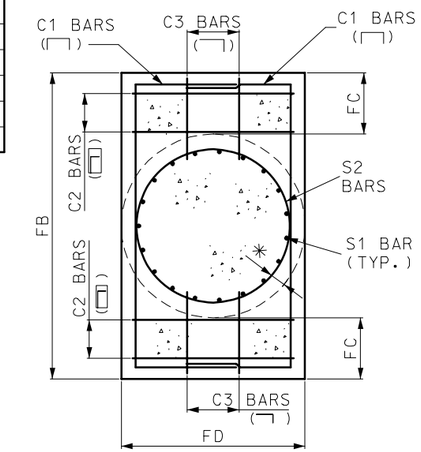

SECTION B-B
TYPICAL SECTION SHOWING REINFORCING STEEL

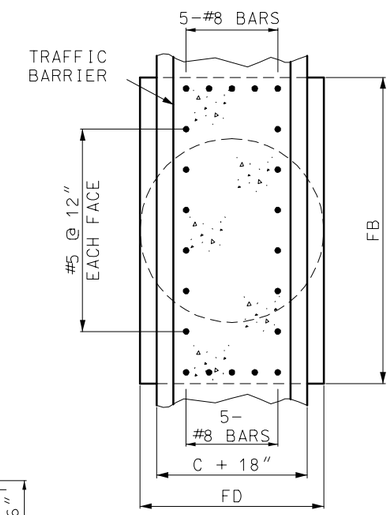

SECTION A-A

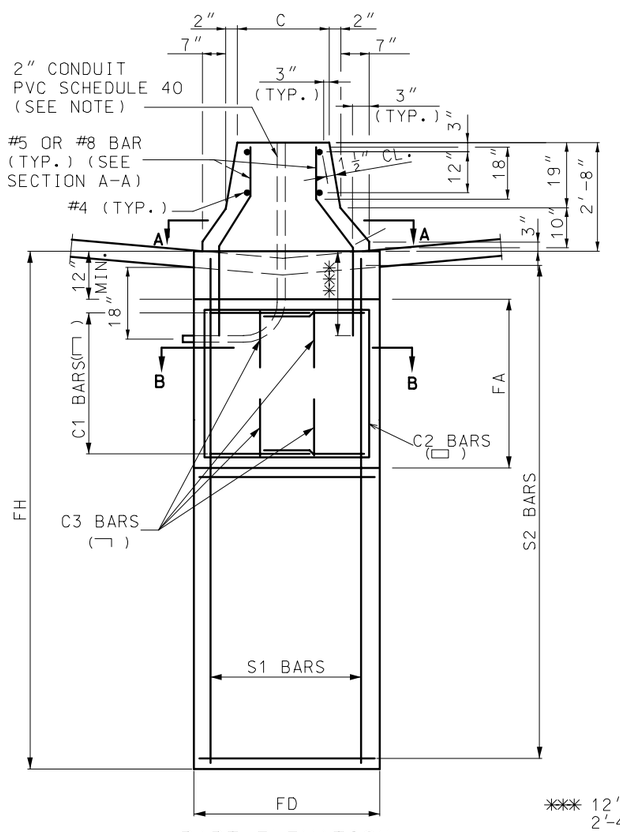

PART ELEVATION
(TYPE A CONCRETE TRAFFIC BARRIER)

✱✱✱ 12" (#5 BAR)
2'-4" (#8 BAR)

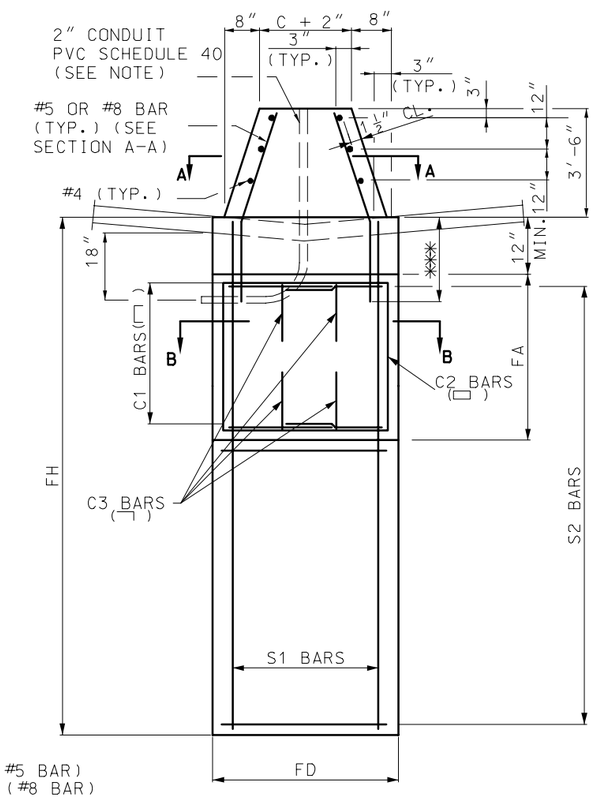

PART ELEVATION
(TYPE C CONCRETE TRAFFIC BARRIER)

DETAILS OF ALTERNATE PEDESTAL

(TO BE USED ADJACENT TO TYPE "A" OR "C" MEDIAN BARRIER)

NOTE:
THE 2" CONDUIT IN THE CONCRETE PEDESTAL SHALL BE PVC SCHEDULE 40 AND SHALL BE PLACED WITH A MIN. RADIUS BEND OF 9½".

GENERAL NOTES:

MINIMUM CLEARANCE TO REINFORCEMENT IS 3" EXCEPT AS SHOWN.

WHEN ROCK IS ENCOUNTERED AT A DEPTH NOT EXCEEDING "FH"/2 FOR FD > 3'-0" OR "FH"/4 FOR FD ≤ 3'-0", THE DIMENSION "FH" MAY BE ADJUSTED TO A MINIMUM OF 3 X "FD", SUBJECT TO APPROVAL BY THE ENGINEER.

CONTACT THE ENGINEER IF WATER TABLE IS ENCOUNTERED DURING EXCAVATION.

ASTM A 106 GRADE B STEEL PIPE OR A TAPERED TUBE OF EQUIVALENT SIZE AND THICKNESS MAY BE SUBSTITUTED FOR PIPE POST.

ALL STEEL PIPE COLUMNS SHALL BE EITHER GRADE "B" SEAMLESS STEEL PIPE OR GRADE "B" ELECTRIC RESISTANCE WELDED STEEL PIPE; A.S.T.M. SPECIFICATION A53.

ALL STRUCTURES SHALL BE GROUNDED.

BURR THREADS ON ALL ANCHOR BOLTS.

PIPE COLUMN, BASE PLATE, ANCHOR BOLTS AND NOTES PERTAINING TO THESE ITEMS HAVE BEEN OMITTED FOR CLARITY. REFER TO SHEET NO. 3 OF 5 FOR DETAILS OF THESE ITEMS.

GROUND LUGS SHALL BE LOCATED INSIDE COLUMN NEAR HAND HOLE.

MISSOURI HIGHWAYS AND TRANSPORTATION COMMISSION

OVERHEAD SIGN TRUSSES
BUTTERFLY AND CANTILEVER STRUCTURAL STEEL

DATE:_____ EFFECTIVE: 06-01-2006 **903.12V** 4/5

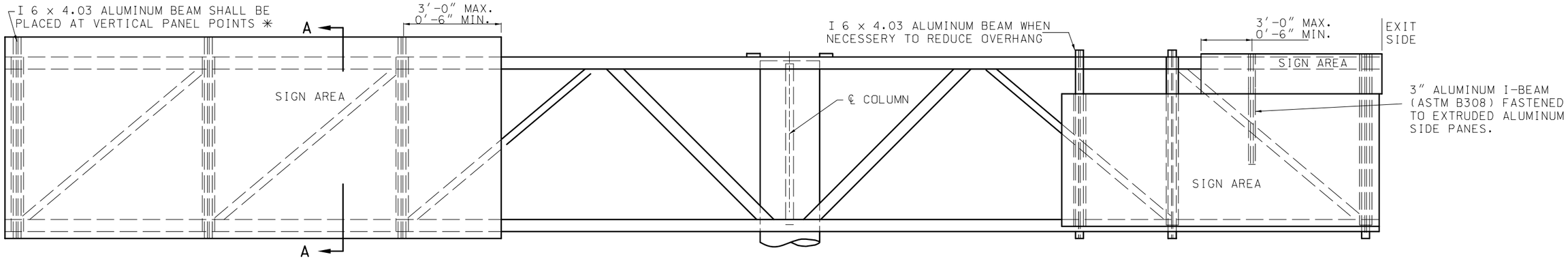

TYPICAL ELEVATION OF SIGNS COMPONENTS

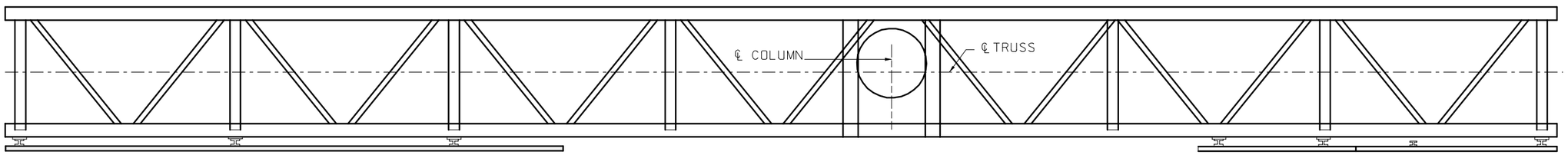

TYPICAL PLAN OF SIGN COMPONENTS

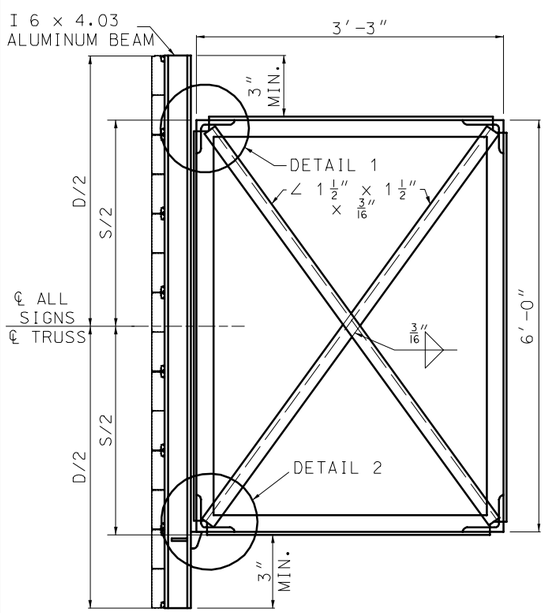

SECTION A-A
TYPICAL SECTION
OF SIGN SUPPORT

NOTE:
"D" = GREATEST OVERALL DEPTH OF ANY SIGNS ON TRUSSES.

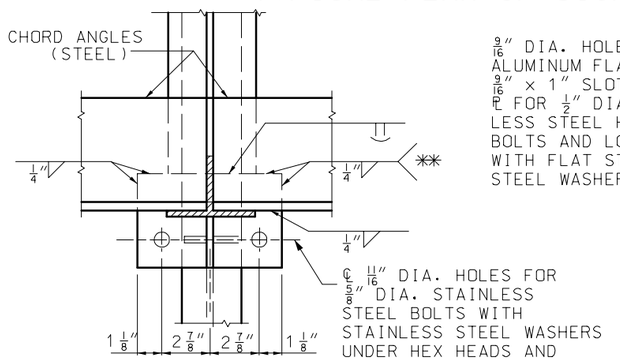

SECTION C-C

9/16" DIA. HOLES IN ALUMINUM FLANGE.
9/16" x 1" SLOT IN 5/8" ℄ FOR ½" DIA. STAINLESS STEEL HEX HEAD BOLTS AND LOCK-NUTS WITH FLAT STAINLESS STEEL WASHERS.

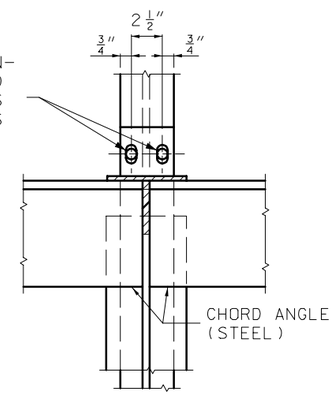

SECTION F-F

NOTE:
SURFACE "A", ZINC CHROMATE ON ALUMINUM SURFACES. NORMAL CLEANING AND PAINTING ON STEEL SURFACES. ZINC CHROMATE IS NOT REQUIRED WHEN STEEL IS GALVANIZED.

✳ FOR SIGN HEIGHTS GREATER THAN 17'-0", BUT LESS THAN OR EQUAL TO 20'-0" USE ADDITIONAL I 6 x 4.03 ALUMINUM BEAMS TO ACHIEVE A MAXIMUM SPACING OF 4'-0" BETWEEN SIGN SUPPORTS.

✳✳ WHEN SIGN SUPPORTS ARE PLACED BETWEEN VERTICAL PANEL POINTS AS ILLUSTRATED IN TYPICAL ELEVATION OF SIGNS COMPONENTS, WELD THE ⅜" STEEL PLATE TO THE BOTTOM CHORD WITH A ¼" FILLET WELD.

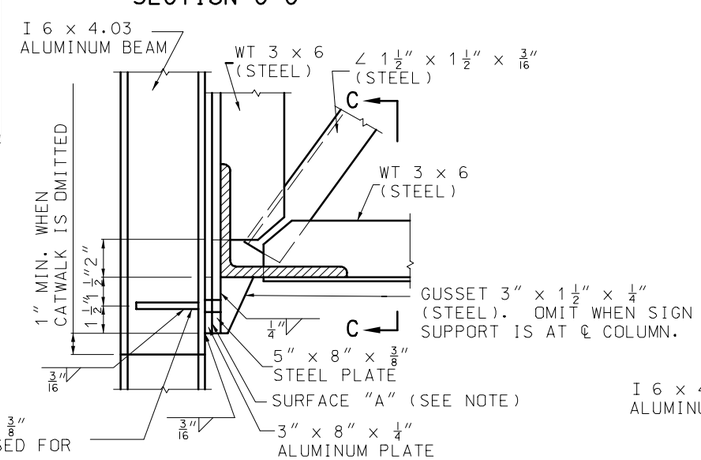

DETAIL 2

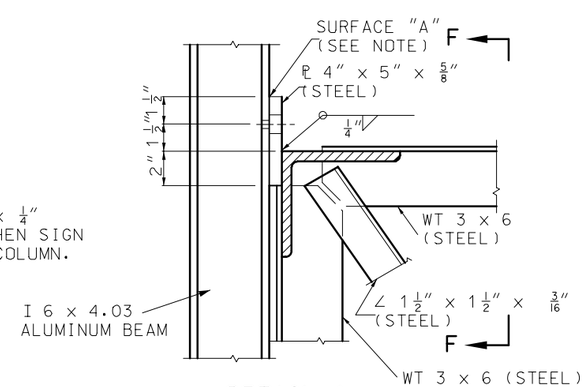

DETAIL 1

GENERAL NOTES:

EXIT NO. PANELS SHALL BE MONTED FLUSH WITH THE EXIT SIDE OF THE GUIDE SIGN.

ALL SIGNS SHALL BE CENTERED VERTICALLY ABOUT THE HORIZONTAL ℄ OF THE TRUSS.

SEE STANDARD PLAN 903.03 FOR SIGN MOUNTING DETAILS.

MISSOURI HIGHWAYS AND TRANSPORTATION COMMISSION			
	OVERHEAD SIGN TRUSSES STRUCTURAL STEEL BUTTERFLY & CANTILEVER		
DATE:_____	EFFECTIVE: 06-01-2006	**903.12V**	5/5