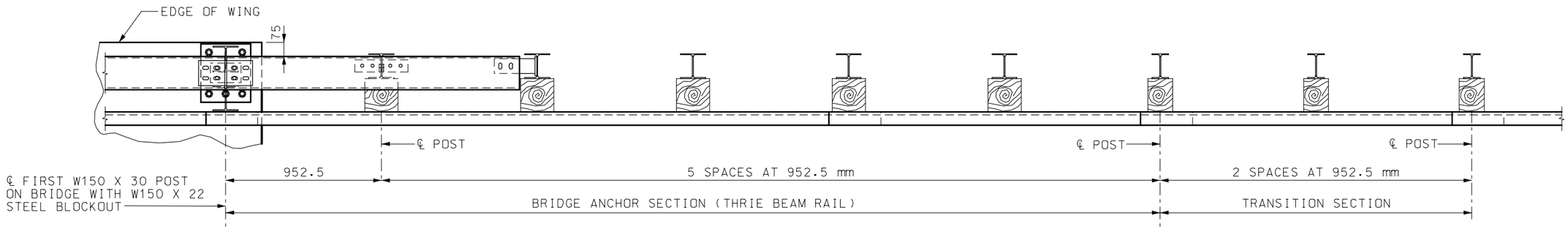

PLAN

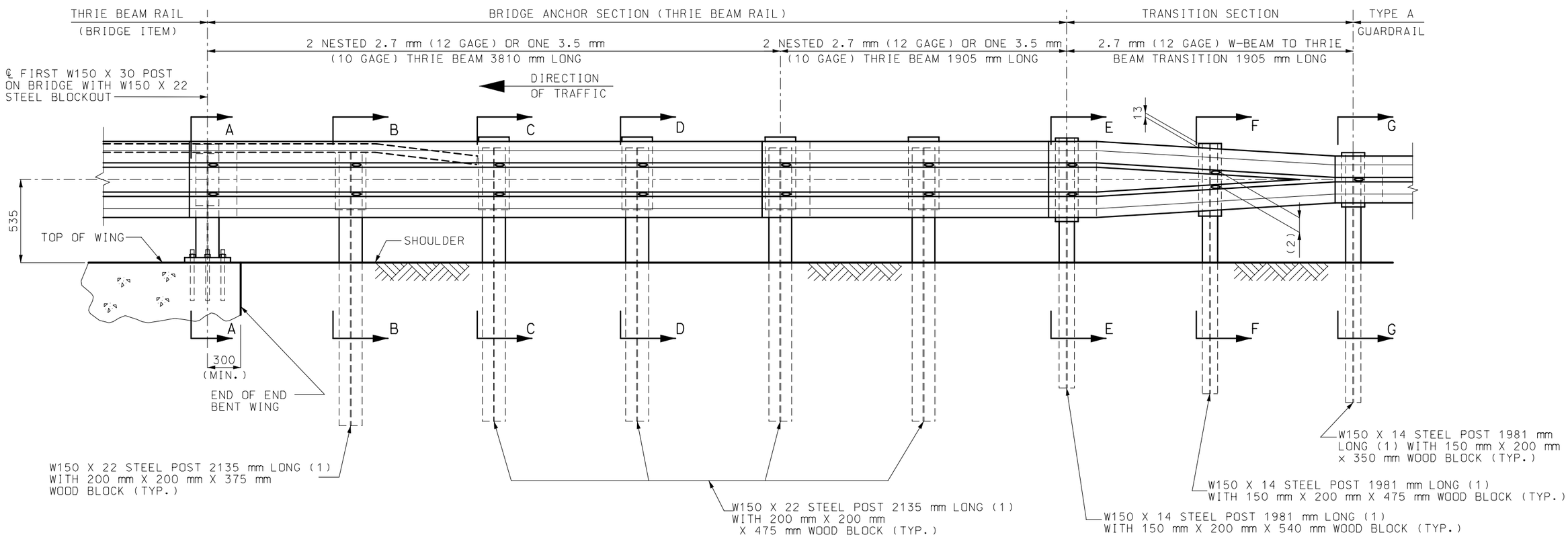

PART SECTION THRU SLAB AT END OF WING

GENERAL NOTE:

ALL DIMENSIONS SHOWN ARE IN mm UNLESS OTHERWISE NOTED.

NOTES:

FOR GENERAL NOTES, SEE SHEET2 OF 5.

FOR POST DETAILS AND SECTION VIEWS, SEE SHEET 2 AND 3 OF 5.

(1) AT CONTRACTOR'S OPTION, EQUIVALENT SECTIONS MAY BE FABRICATED FROM MATERIAL MEETING AND IN ACCORDANCE WITH THE REQUIREMENTS OF ASTM A769 GRADE 36 (250 MPa) OR 40 (275 MPa). THE SECTIONS SHALL BE GALVANIZED AFTER FABRICATION IN ACCORDANCE WITH THE REQUIREMENTS OF AASHTO M 111.

(2) VERIFY BY RAIL TRANSITION PRODUCER.

MISSOURI HIGHWAYS AND TRANSPORTATION COMMISSION

BRIDGE ANCHOR SECTION
(THRIE BEAM RAIL ON BRIDGE)

DATE:_____ | EFFECTIVE:04-01-2005 | **M606.23H** | 1/5

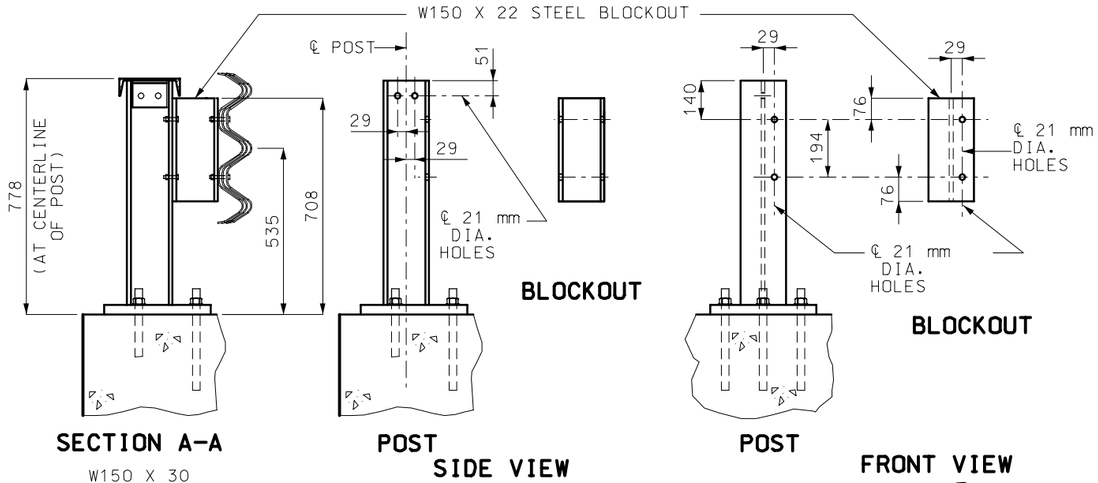

STEEL POST AND STEEL BLOCKOUT (B1)

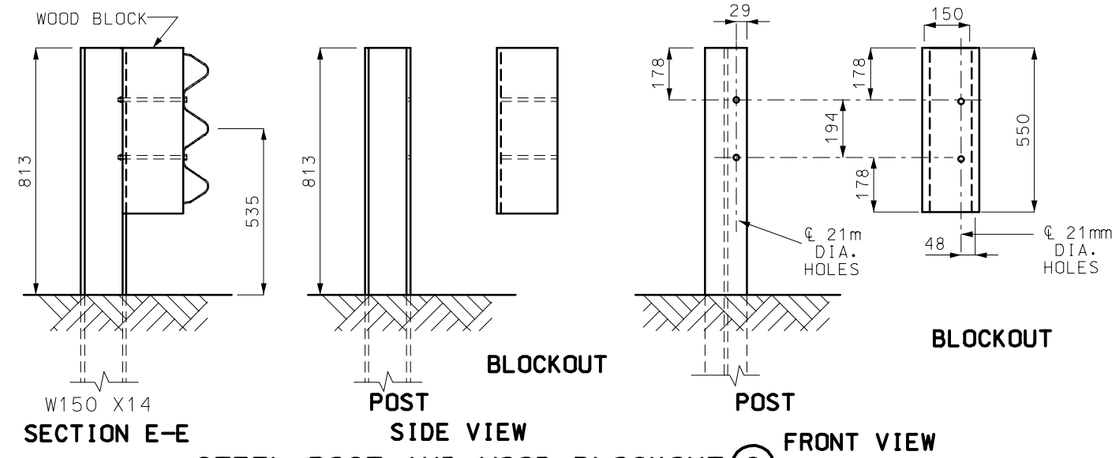

STEEL POST AND WOOD BLOCKOUT (6)

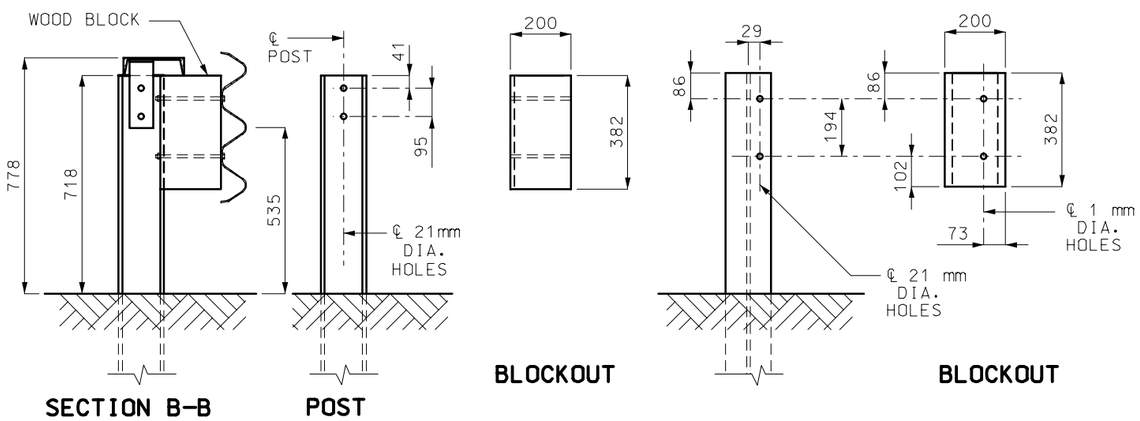

STEEL POST AND WOOD BLOCKOUT (1)

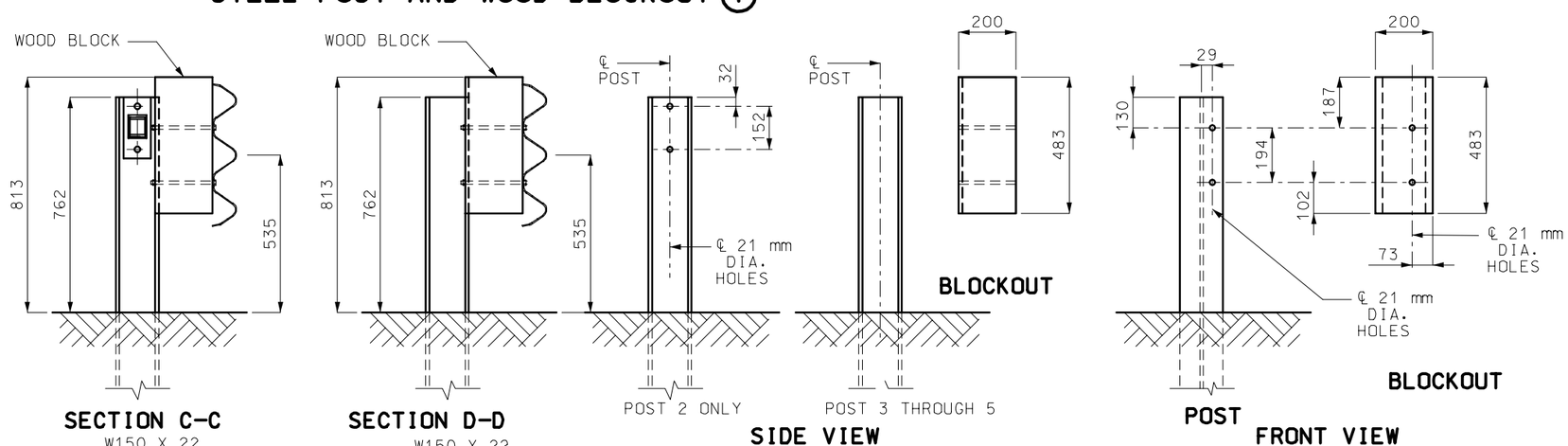

STEEL POST AND WOOD BLOCKOUT (2) THROUGH (5)

(2) VERIFY BY RAIL TRANSITION PRODUCER.

GENERAL NOTES:

ALL DIMENSIONS SHOWN ARE IN mm UNLESS OTHERWISE NOTED.

DESIGN BASED UPON NCHRP REPORT 350 TEST LEVEL 3 (TL-3).

THE THRIE BEAM RAIL FOR THE BRIDGE ANCHOR SECTION SHALL BE 2.7 mm (12 GAGE) OR 3.5 mm (10 GAGE) AT THE CONTRACTOR'S OPTION, AND THE TRANSITION SECTION SHALL BE 2.7 mm (12 GAGE).

FABRICATED STRUCTURAL STEEL SHALL BE ASTM A709 GRADE 36 (250 MPa).

FOR PROTECTIVE COATING AND MATERIAL REQUIREMENTS, SEE SECTION 1040 OF THE STANDARD SPECIFICATIONS.

RAIL POSTS SHALL BE SET PERPENDICULAR TO THE ROADWAY PROFILE GRADE AND VERTICALLY IN CROSS SECTION.

WASHERS SHALL BE USED AT ALL POST BOLTS.

USE 16 mm BUTTON-HEAD, OVAL SHOULDER BOLTS WITH HEX NUTS (THICKNESS OF HEX NUTS = 10 mm MIN.) AT ALL SLOTS.

ALL LAP SPLICES SHALL BE MADE IN THE DIRECTION OF TRAFFIC.

THE COST OF FURNISHING, FABRICATING AND INSTALLING TRANSITION SECTION, COMPLETE-IN-PLACE, SHALL BE PAID FOR AT THE CONTRACT UNIT PRICE PER EACH.

THE COST OF FURNISHING, FABRICATING AND INSTALLING BRIDGE ANCHOR SECTION (THRIE BEAM), COMPLETE-IN-PLACE, SHALL BE PAID FOR AT THE CONTRACT UNIT PRICE PER EACH.

FOR DETAILS NOT SHOWN, SEE BRIDGE THRIE BEAM RAIL SHEET.

MISSOURI HIGHWAYS AND TRANSPORTATION COMMISSION

BRIDGE ANCHOR SECTION
(THRIE BEAM RAIL ON BRIDGE)

DATE:	EFFECTIVE: 04-01-2005	M606.23H	2/5

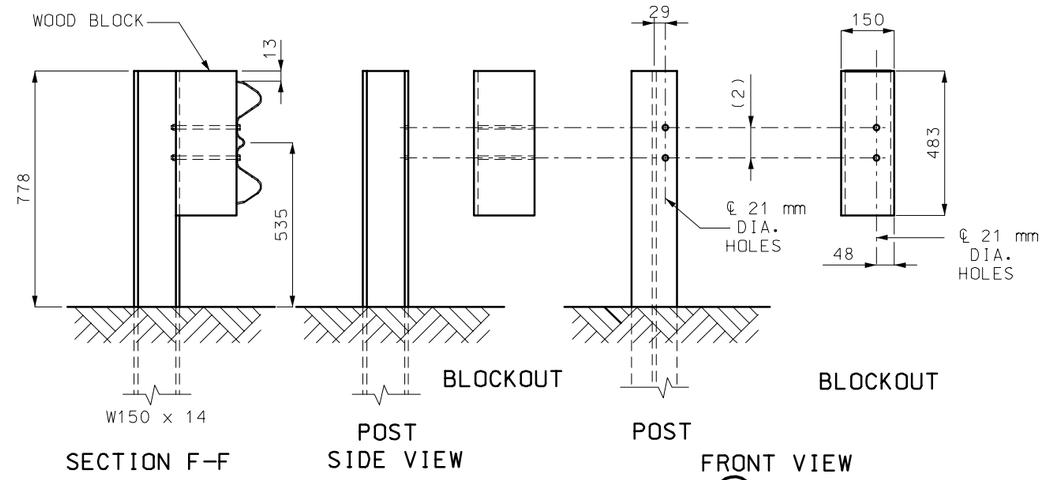

STEEL POST AND WOOD BLOCKOUT ⑦

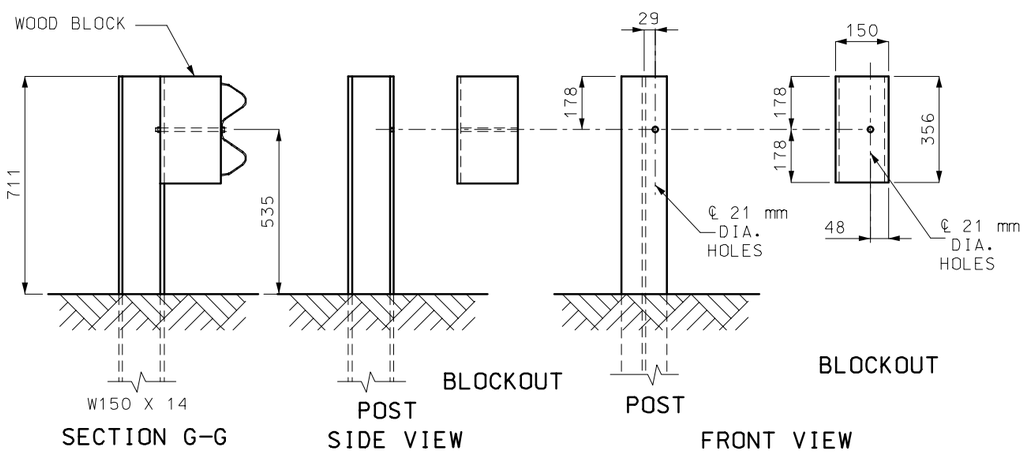

STEEL POST AND WOOD BLOCKOUT ⑧

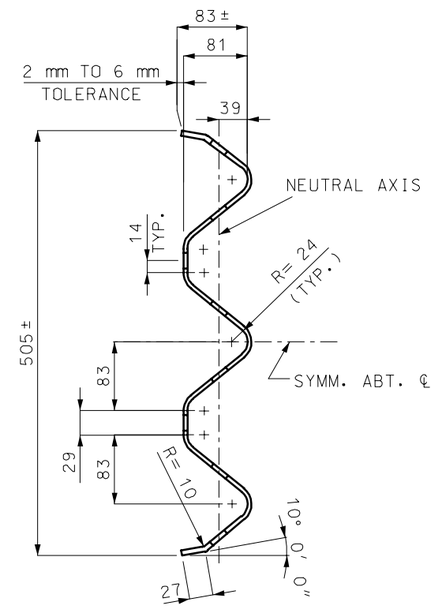

SECTION H-H

THROUGH THRIE BEAM RAIL

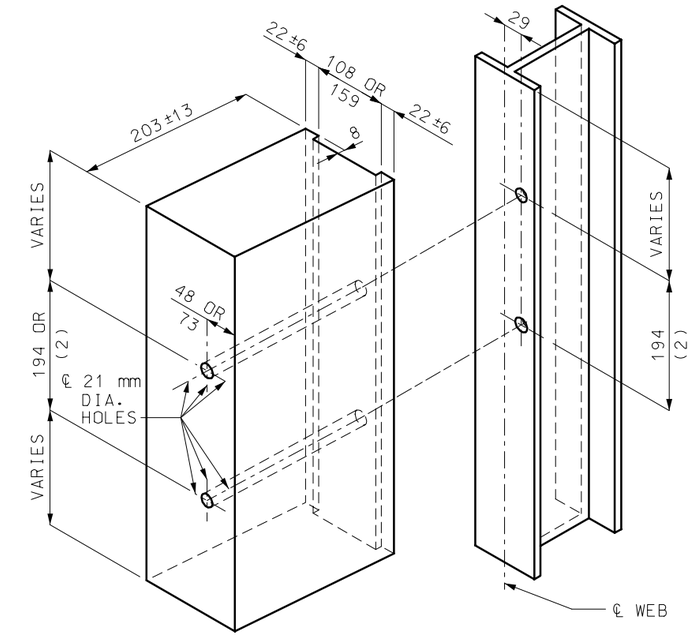

POST ⑦ - (2) VERIFY BY RAIL TRANSITION PRODUCER (SEE FRONT SHEET)
POST ⑧ - ONLY 1 HOLE REQUIRED
ALL HOLES 21 mm DIAMETER EXCEPT AS NOTED

HOLE PUNCHING DETAIL

FOR STEEL POST & WOOD BLOCKS (52 mm AND 203 mm)

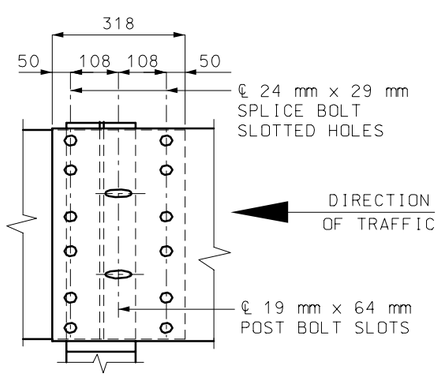

THRIE BEAM RAIL SPLICE AT POST

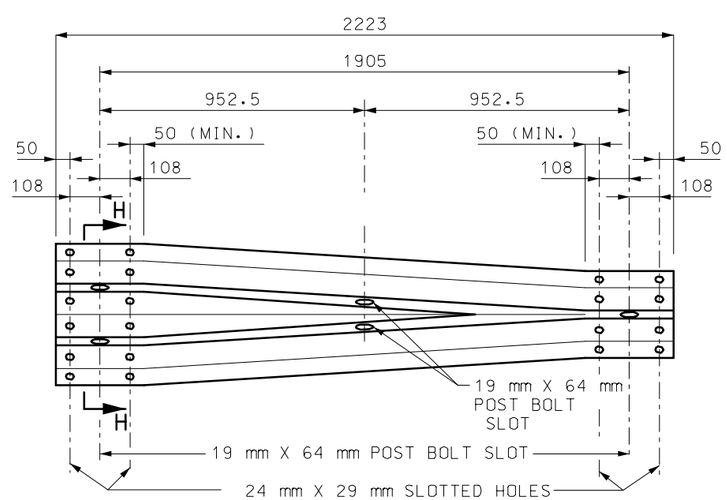

TRANSITION SECTION

GENERAL NOTE:

ALL DIMENSIONS SHOWN ARE IN mm UNLESS OTHERWISE NOTED.

MISSOURI HIGHWAYS AND TRANSPORTATION COMMISSION

BRIDGE ANCHOR SECTION
(THRIE BEAM RAIL ON BRIDGE)

DATE:_____ | EFFECTIVE: 04-01-2005 | **M606.23H** | 3/5

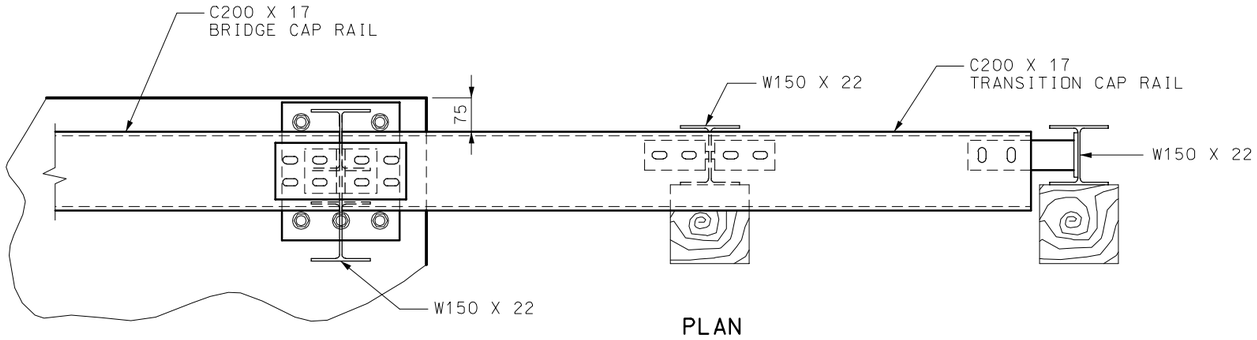

PLAN

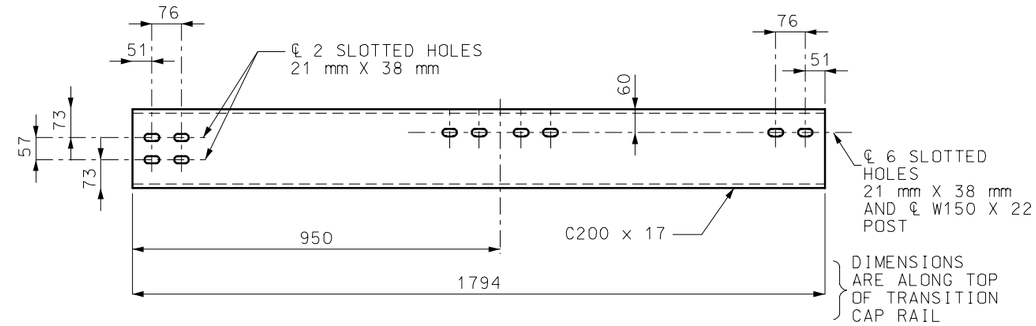

TOP VIEW (ALTERNATE 1)

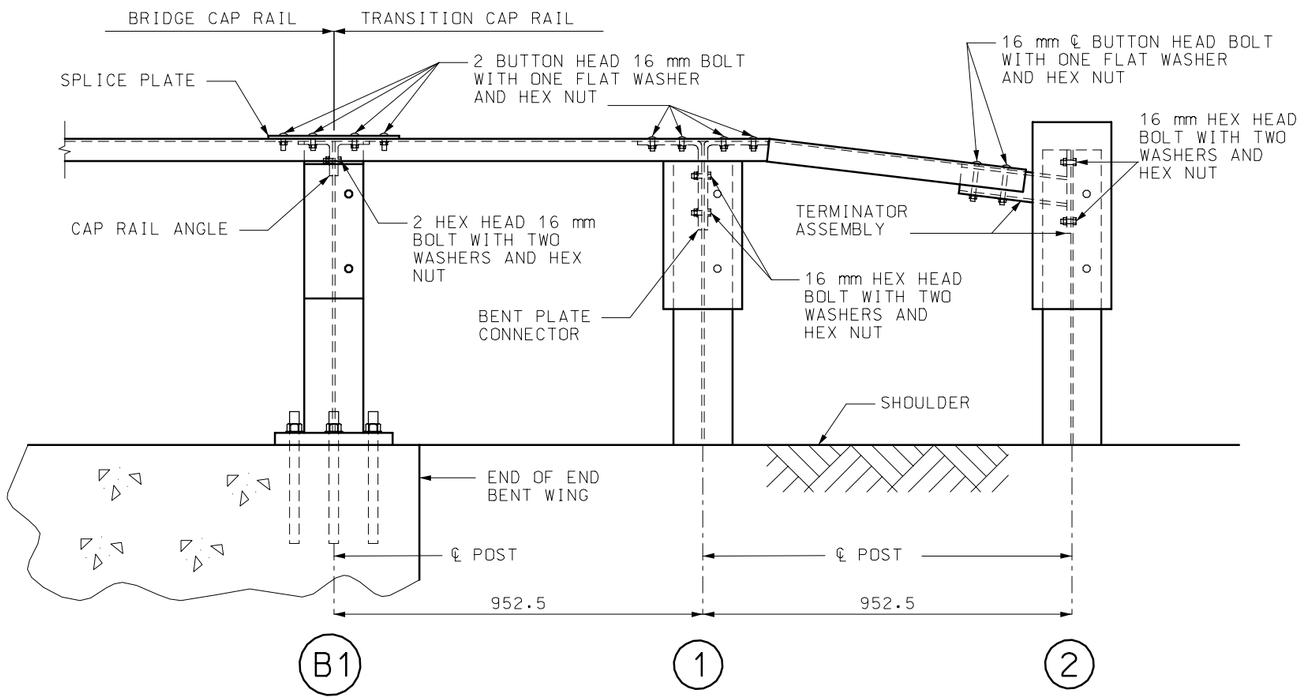

ELEVATION
(THRIE BEAM RAIL NOT SHOWN)

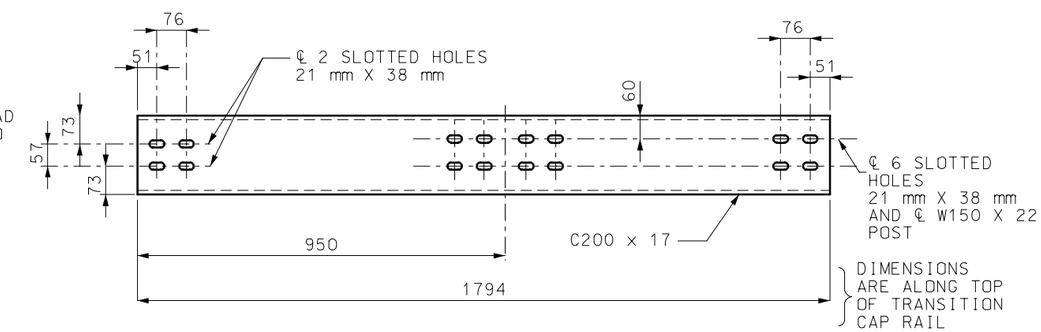

TOP VIEW (ALTERNATE 2)

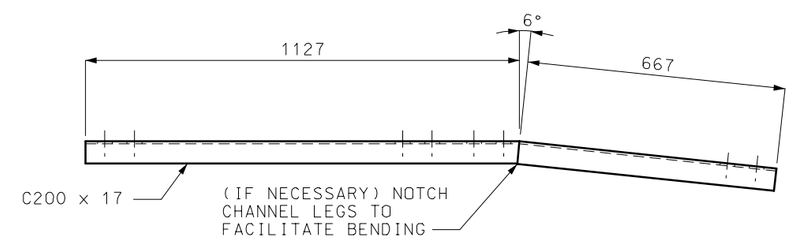

ELEVATION
TRANSITION CAP RAIL

GENERAL NOTE:

ALL DIMENSIONS SHOWN ARE IN mm UNLESS OTHERWISE NOTED.

MISSOURI HIGHWAYS AND TRANSPORTATION COMMISSION

BRIDGE ANCHOR SECTION
(THRIE BEAM RAIL ON BRIDGE)

DATE:_____ | EFFECTIVE: 04-01-2005 | **M606.23H** | 4/5

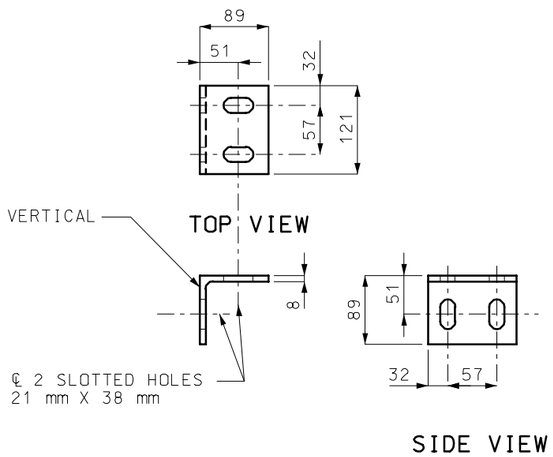

CAP RAIL ANGLE

∠ 89 mm X 89 mm X 8 mm

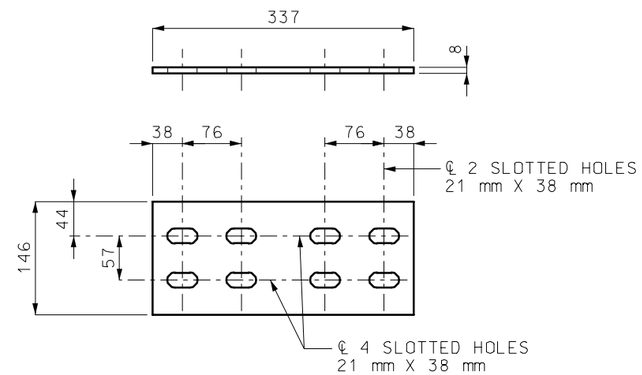

SPLICE PLATE

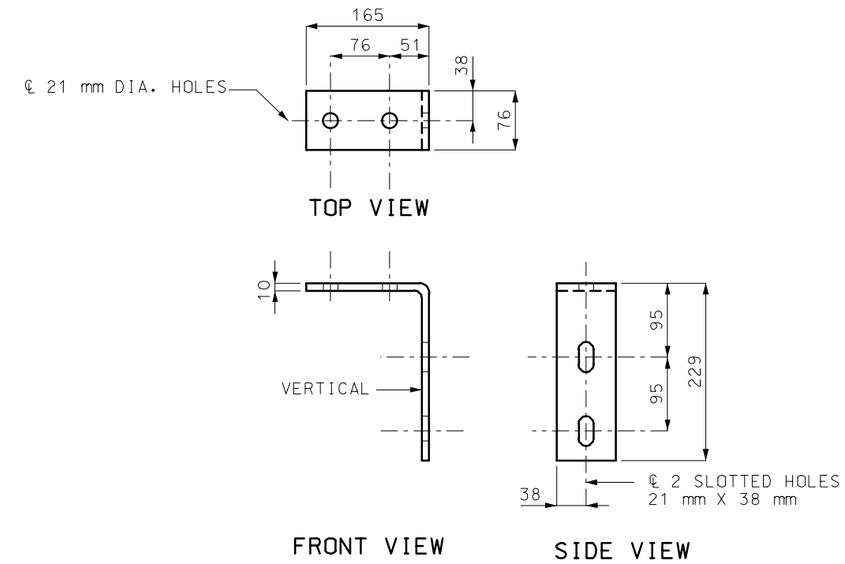

BENT PLATE CONNECTOR

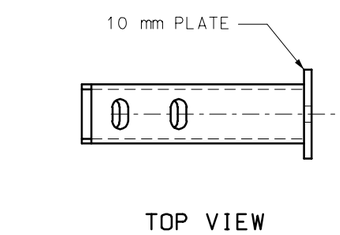

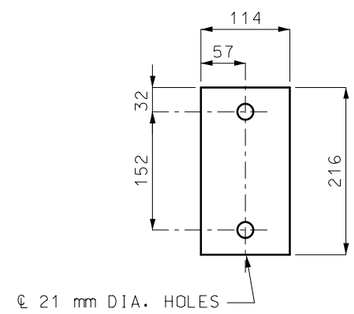

21 mm PLATE

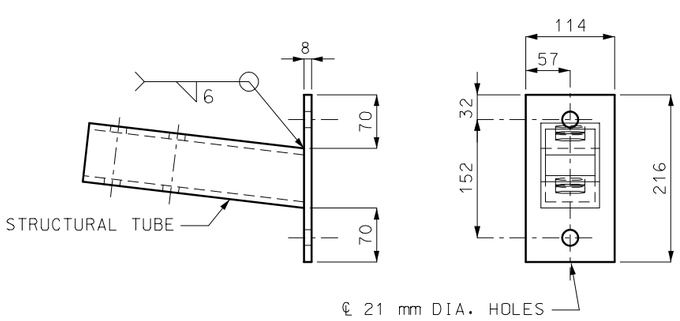

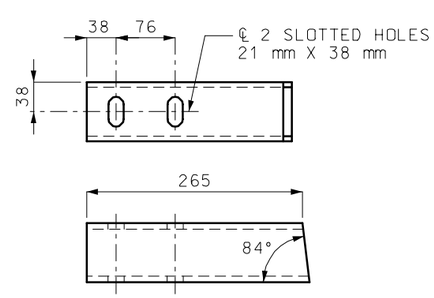

STRUCTURAL TUBE

TS 76 mm X 76 mm X 8 mm

TERMINATOR ASSEMBLY

GENERAL NOTE:

ALL DIMENSIONS SHOWN ARE IN mm UNLESS OTHERWISE NOTED.

MISSOURI HIGHWAYS AND TRANSPORTATION COMMISSION

BRIDGE ANCHOR SECTION
(THRIE BEAM RAIL ON BRIDGE)

DATE:	EFFECTIVE: 04-01-2005	M606.23H	5/5