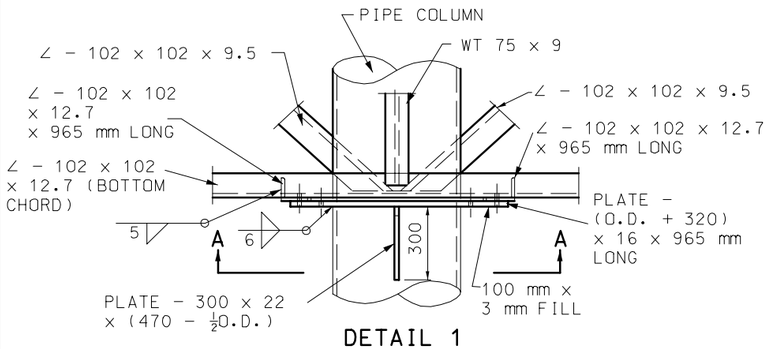

DETAIL 1
TRUSS BOTTOM CONNECTION TO COLUMN

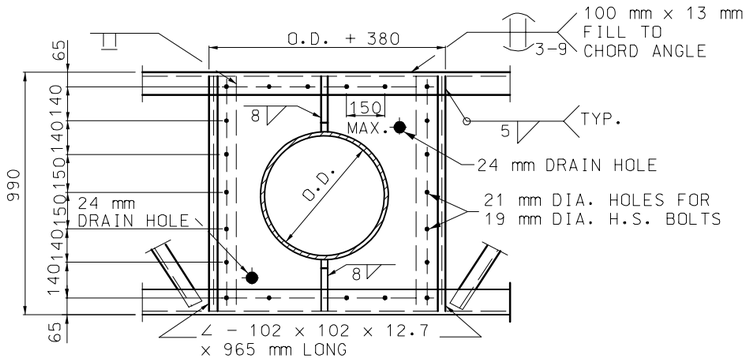

SECTION A-A

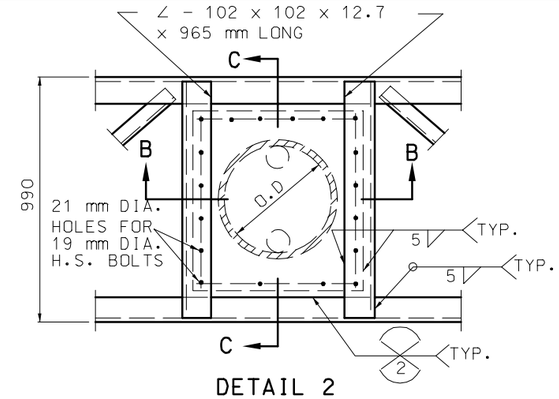

DETAIL 2
TRUSS TOP CONNECTION TO COLUMN

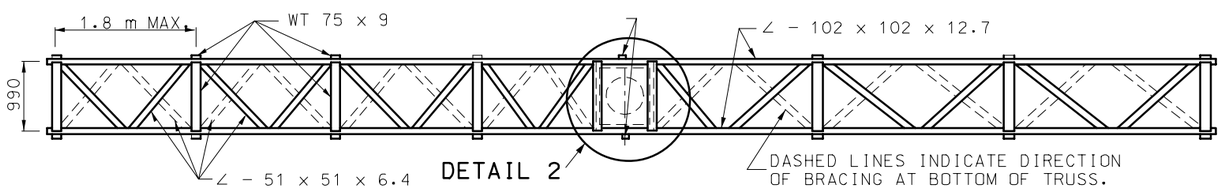

PLAN

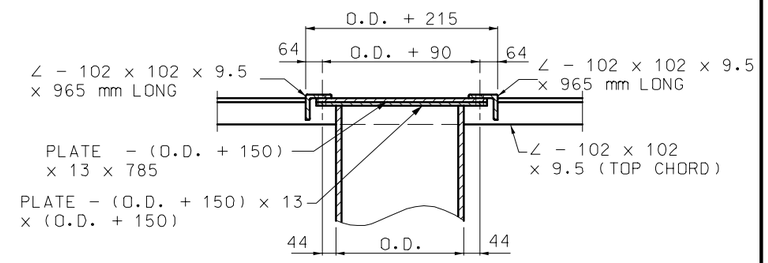

SECTION B-B

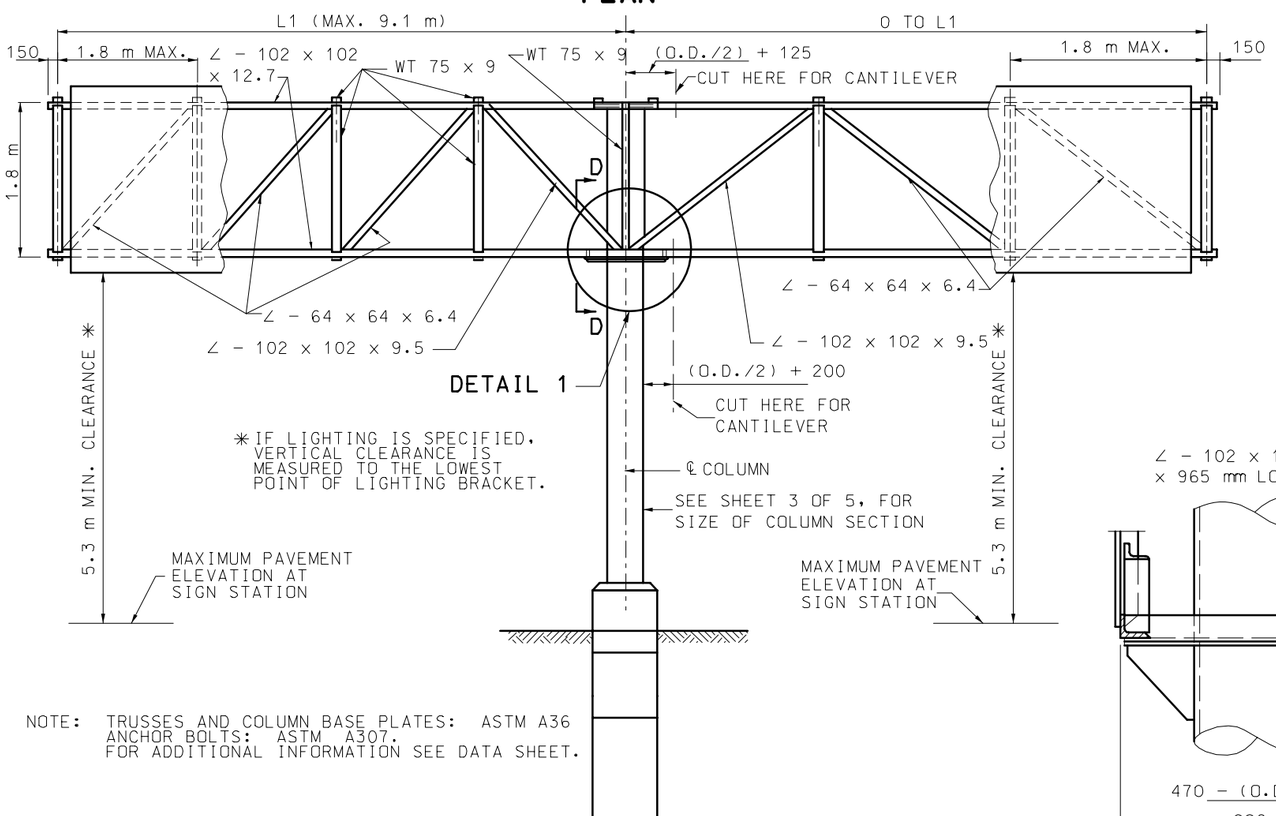

ELEVATION

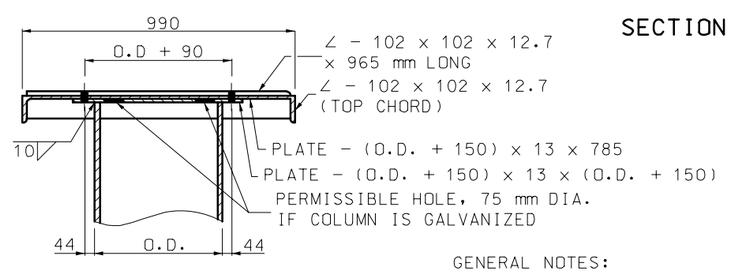

SECTION C-C

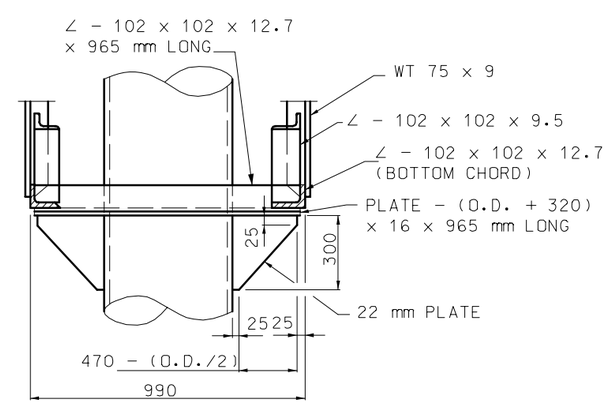

SECTION D-D

GENERAL NOTES:

ALL DIMENSIONS SHOWN ARE IN mm UNLESS OTHERWISE NOTED.

ALL FASTENERS SHALL HAVE A HARDENED WASHER UNDER THE NUT OR BOLT HEAD, WHICHEVER IS TURNED IN TIGHTENING.

ZINC CHROMATE PRIMER SHALL MEET THE REQUIREMENTS OF FEDERAL SPECIFICATION TT-P-645 OR TT-P-1757 AND SHALL BE ACCEPTED ON THE BASIS OF THE LABEL SHOWING CONFORMANCE OR A MANUFACTURER'S CERTIFICATION.

DESIGN OF STRUCTURAL SUPPORTS SHALL COMPLY WITH AASHTO STANDARD SPECIFICATIONS FOR STRUCTURAL SUPPORTS FOR HIGHWAY SIGNS, LUMINAIRES AND TRAFFIC SIGNALS 2001 AND CURRENT INTERIMS.

NOTE: TRUSSES AND COLUMN BASE PLATES: ASTM A36
ANCHOR BOLTS: ASTM A307.
FOR ADDITIONAL INFORMATION SEE DATA SHEET.

MISSOURI HIGHWAYS AND TRANSPORTATION COMMISSION

OVERHEAD SIGN TRUSSES

BUTTERFLY & CANTILEVER STRUCTURAL STEEL

DATE:_____ | EFFECTIVE: 06-01-2006 | M903.12V | 1/5

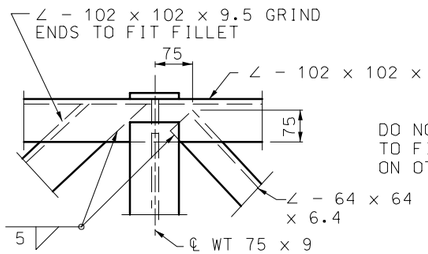

DETAIL 1

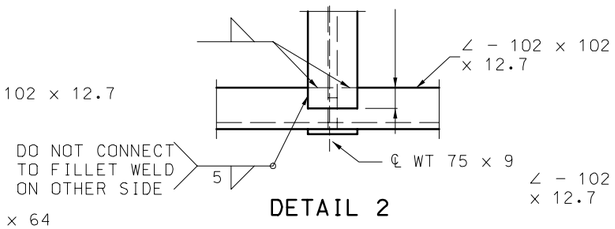

DETAIL 2

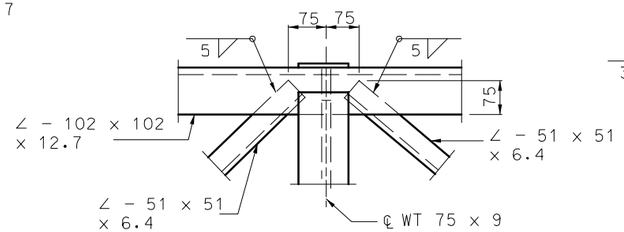

DETAIL 3

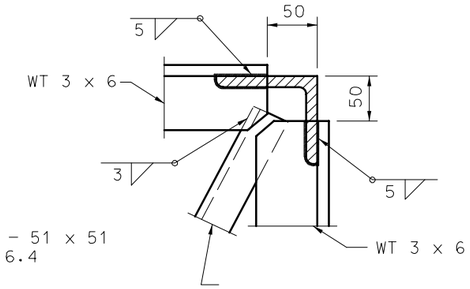

DETAIL 4

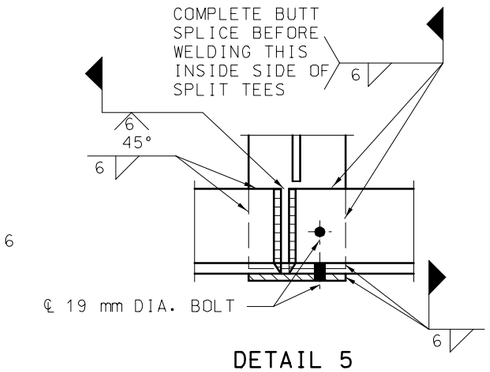

DETAIL 5

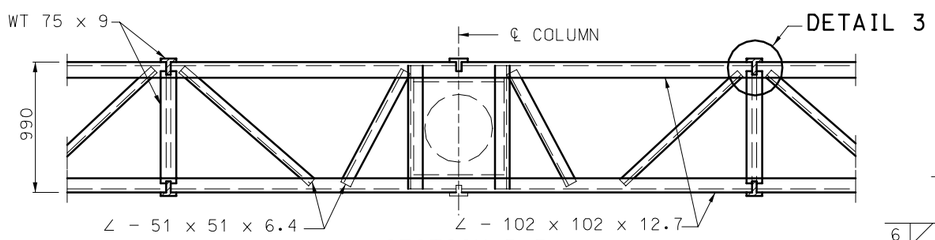

SECTION B-B

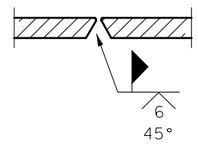

SECTION D-D

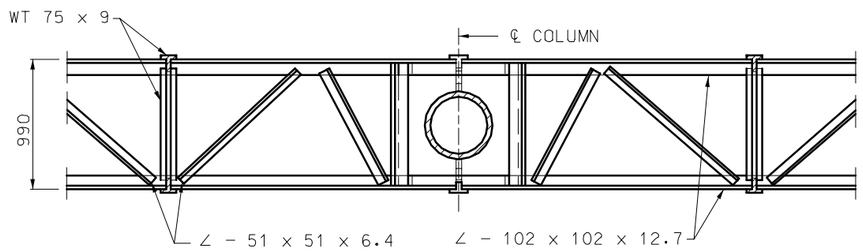

SECTION C-C

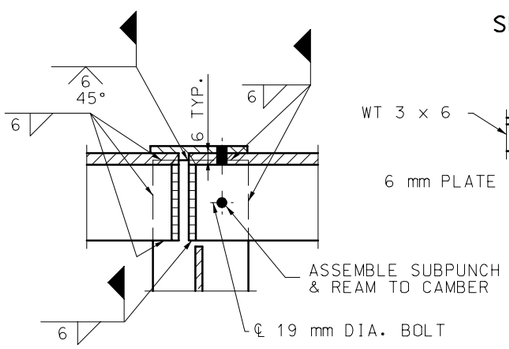

SECTION F-F

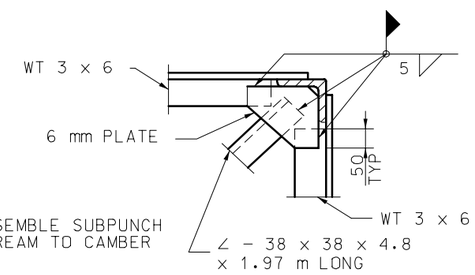

SECTION E-E
(SPLICE ONLY)

NOTE: 19 mm DIA. BOLTS SHALL BE REMOVED AFTER WELDING IS COMPLETE. BOLT HOLES SHALL BE PLUGGED AND THE OUTSIDE FACE GROUND SMOOTH.

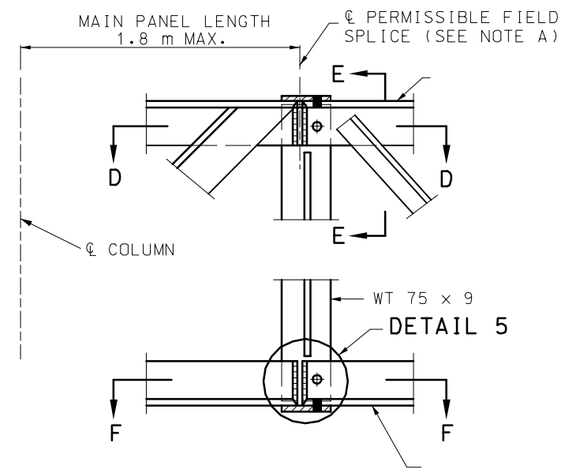

LOCATION OF FIELD SPLICE

NOTE A: SPLICING CHORD ANGLES IN THE SHOP AND THE FIELD SPLICE SHOWN IN THIS SHEET WILL NOT BE ALLOWED WITHOUT SPECIAL PERMISSION. IF PERMISSION IS GRANTED SUCH SPLICES SHALL BE LOCATED AT THE CENTER LINE OF MAIN PANEL POINT NEXT TO COLUMN.

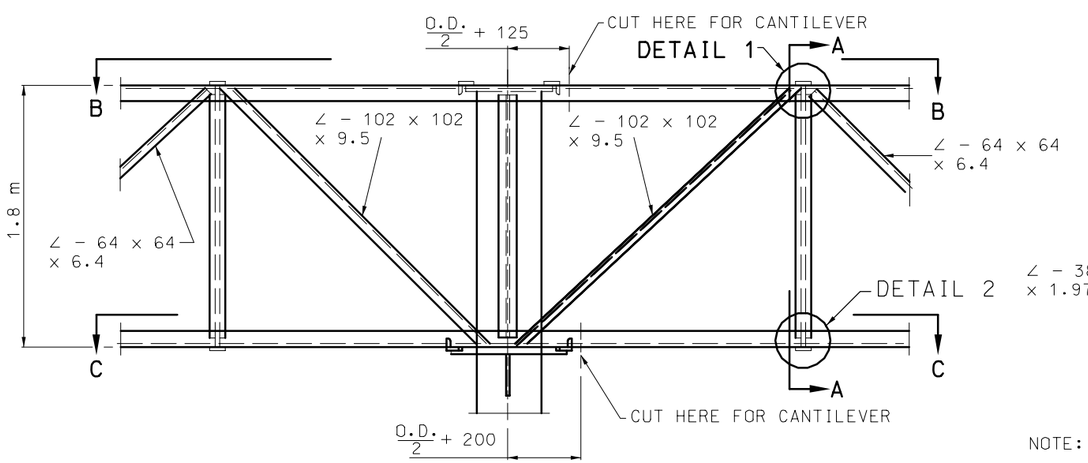

PART ELEVATION OF BUTTERFLY TRUSS

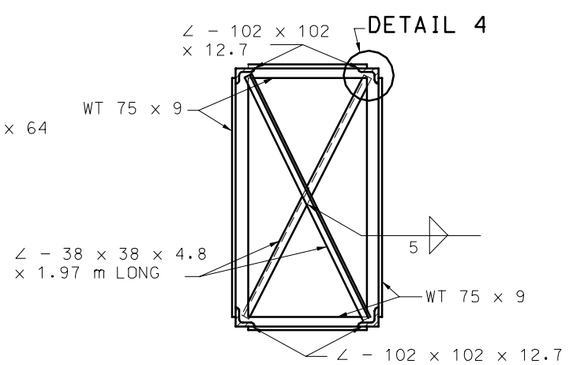

SECTION A-A

NOTE: SHRINK ∠ - 38 X 38 X 4.8 IF NECESSARY TO TAKE UP DISTORTIONAL SLACK.

GENERAL NOTES:

ALL DIMENSIONS SHOWN ARE IN mm UNLESS OTHERWISE NOTED.

MISSOURI HIGHWAYS AND TRANSPORTATION COMMISSION

OVERHEAD SIGN TRUSSES
BUTTERFLY & CANTILEVER
STRUCTURAL STEEL

DATE:_____ EFFECTIVE: 06-01-2006 **M903.12V** 2/5

POST TYPE	PIPE COLUMN D.D. (mm)	PIPE COLUMN WEIGHT kg/m	DIMENSION (mm)	SPLIT (mm)	BASE PLATE SIZE** (mm)	ANCHOR BOLT NO.	ANCHOR BOLT DIA. (mm)	FA (mm)	FB (mm)	FC (mm)	FD (mm)	FH (mm)	COLLAR REINFORCEMENT MOMENT-C1 BARS	MOMENT-C1 SPACING (mm)	SHEAR-C2 BARS	SHEAR-C2 SPACING (mm)	SKIN-C3 BARS	SKIN-C3 SPACING (mm)	SHAFT REINFORCEMENT LONGITUDINAL S1 QUANTITY	LONGITUDINAL S1 BARS	SHEAR-S2 BARS	SHEAR-S2 SPACING (mm)	REBAR TOTAL (kg)	CONCRETE (m^3)
III	450	139.07	215	0	810 x 810 x 44	10	51	1.2	2.25	.45	1.35	4.2	#19	150	#13	300	#13	300	19	#32	#16	150	948	9.5
IV	500	154.97	215	0	860 x 860 x 50	10	57	1.2	2.25	.45	1.35	4.2	#19	150	#13	300	#13	300	19	#32	#16	150	948	9.5
V	450	139.07	215	180	990 x 810 x 50	10	57	1.5	4.05	1.2	1.65	5.1	#19	150	#13	300	#13	300	22	#36	#16	150	1769	20.2
VI	500	154.97	215	205	1070 x 860 x 57	10	57	1.5	4.2	1.2	1.8	5.4	#19	150	#13	300	#13	300	27	#36	#16	150	2150	24.3
VII	600	186.75	230	205	1170 x 970 x 57	10	64	1.5	4.2	1.2	1.8	5.4	#19	150	#13	300	#13	300	27	#36	#16	150	2150	24.3
VIII	600	186.75	230	205	1170 x 970 x 57	10	64	1.2	3.75	.9	1.95	6.0	#19	150	#13	300	#13	300	31	#36	#16	150	2509	26.6

** BASE PLATES, PEDESTAL, AND FOUNDATIONS, LONGER SIDES SHALL BE NORMAL TO AXIS OF SIGN.

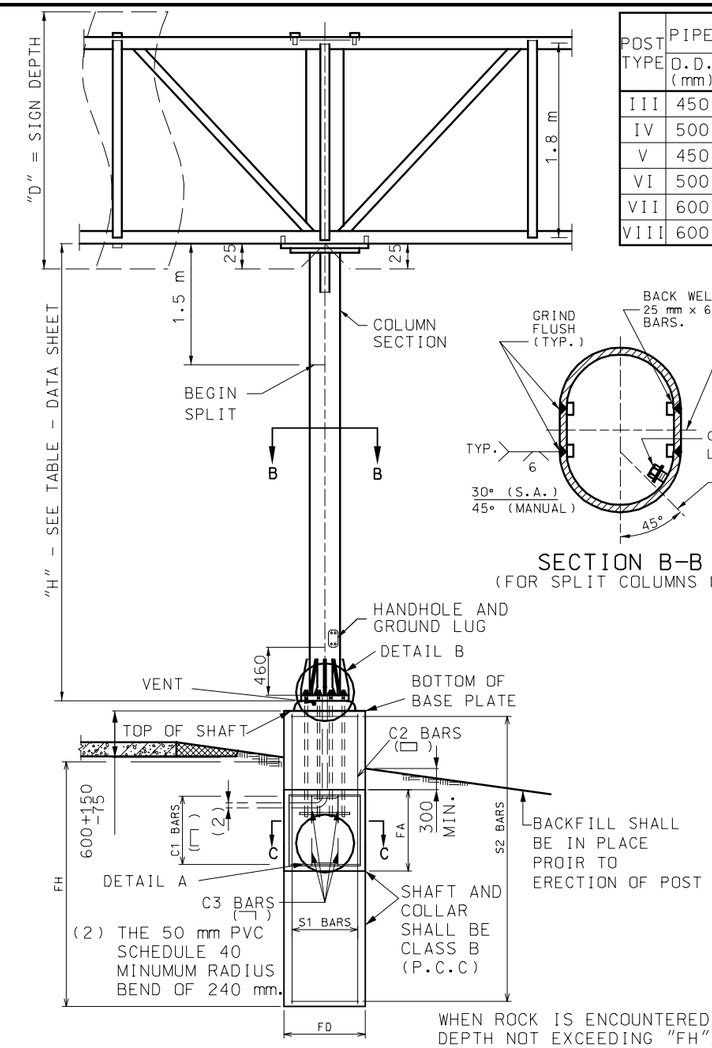

ELEVATION

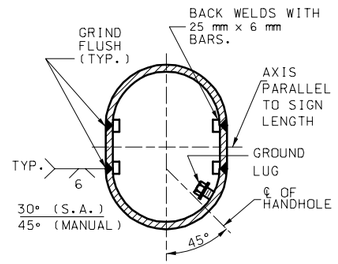

SECTION B-B
(FOR SPLIT COLUMNS ONLY)

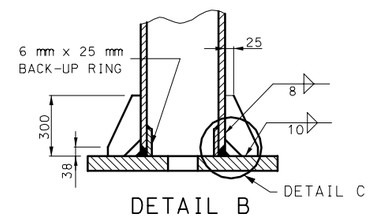

DETAIL B
(SECTION VIEW SHOWN)

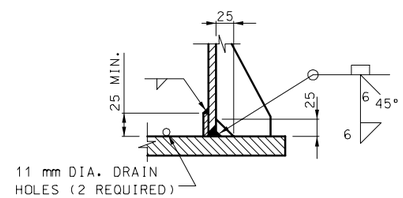

DETAIL C

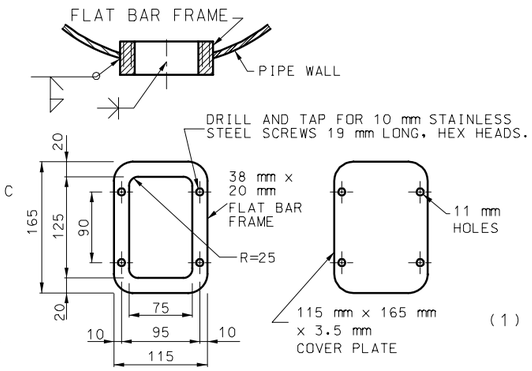

HANDHOLE AND COVER DETAILS

NOTE:
HANDHOLE REQUIRED ONLY IN POWER COLUMN.

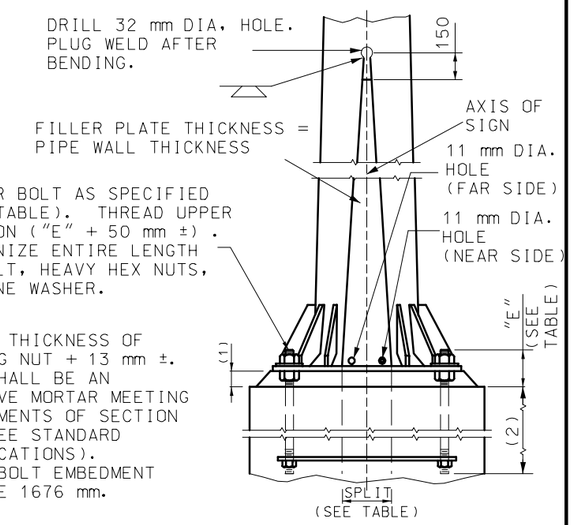

(1) GROUT = THICKNESS OF LEVELING NUT + 13 mm ±. GROUT SHALL BE AN EXPANSIVE MORTAR MEETING REQUIREMENTS OF SECTION 1066 (SEE STANDARD SPECIFICATIONS).

(2) ANCHOR BOLT EMBEDMENT SHALL BE 1676 mm.

PART ELEVATION

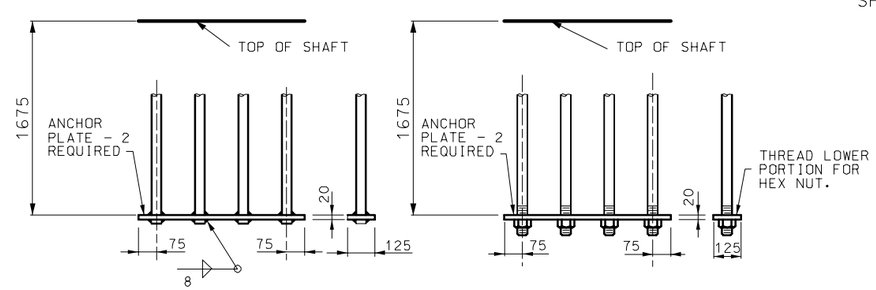

DETAIL A
ANCHORAGE

DETAIL A
OPTIONAL ANCHORAGE

(BOTH DETAILS ARE SHOWN FOR 4 BOLTS - SIMILAR FOR 3 BOLTS)

WHEN ROCK IS ENCOUNTERED AT A DEPTH NOT EXCEEDING "FH"/2 FOR FD > 3' OR "FH"/4 FOR FD ≤ 3', THE DIMENSION "FH" MAY BE ADJUSTED TO A MINIMUM OF 3 x "FD", SUBJECT TO APPROVALBY THE ENGINEER.

CONTACT THE ENGINEER IF WATER TABLE IS ENCOUNTERED DURING EXCAVATION.

VERTICAL LEG OF C3 BARS SHALL BE PLACED INSIDE SHAFT S2 BARS.

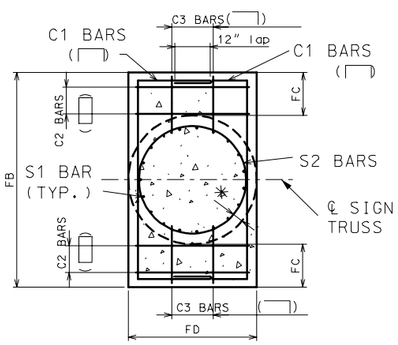

SECTION C-C
(TYPICAL SECTION SHOWING REINFORCING STEEL)

* 4" CLEAR FOR FD ≤ 4'-0"
6" CLEAR FOR FD > 4'-0"

TYPICAL BASE PLATE (10 ANCHOR TYPE) BUTTERFLY AND CANTILEVER (B.C.)	III	IV	V	VI	VII	VIII
A	205	230	205	230	270	
B	250	250	250	250	280	
C	810	860	810	860	970	
D	330	355	420	460	510	
E	810	860	990	1070	1170	
F	150	150	150	150	150	150

NOTE:
FOR DETAILS OF ALTERNATE PEDESTAL, SEE SHEET NO. 4 OF 5.

ANCHOR BOLTS AND PLATE NOT SHOWN.

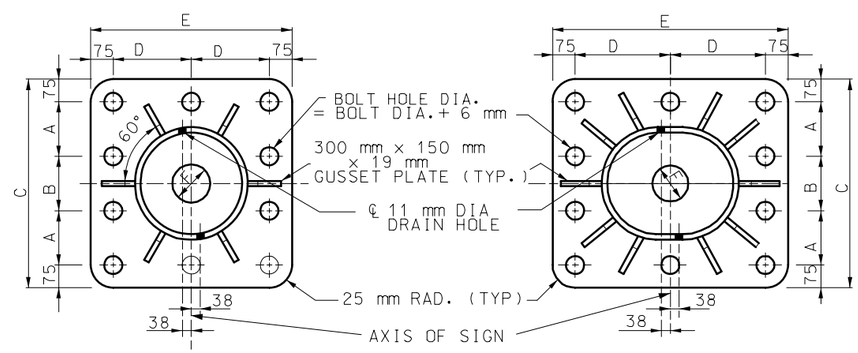

III AND IV B.C.

V, VI, AND VII B.C.

TYPICAL BASE PLATES

GENERAL NOTES:

ALL DIMENSIONS SHOWN ARE IN mm UNLESS OTHERWISE NOTED.

MINIMUM CLEARANCE TO REINFORCEMENT IS 75 mm EXCEPT AS SHOWN.

ASTM A 106 GRADE B STEEL PIPE OR A TAPERED TUBE OF EQUIVALENT SIZE AND THICKNESS MAY BE SUBSTITUTED FOR PIPE POST.

ALL STEEL PIPE COLUMNS SHALL BE EITHER GRADE "B" SEAMLESS STEEL PIPE OR GRADE "B" ELECTRIC RESISTANCE WELDED STEEL PIPE; A.S.T.M. SPECIFICATION A53.

ALL STRUCTURES SHALL BE GROUNDED.

BURR THREADS ON ALL ANCHOR BOLTS.

A HORIZONTAL WELDED SPLICE MAY BE FABRICATED IN THE COLUMN BETWEEN THE TOP OF PIPE AND 1200 mm BELOW THE BOTTOM CHORDS OF THE TRUSS WHEN DETAILED ON THE SHOP DRAWINGS AND APPROVED BY THE ENGINEER.

GROUND LUGS SHALL BE LOCATED INSIDE COLUMN NEAR HAND HOLE.

MISSOURI HIGHWAYS AND TRANSPORTATION COMMISSION

OVERHEAD SIGN TRUSSES

BUTTERFLY & CANTILEVER STRUCTURAL STEEL

DATE:_____ EFFECTIVE: 06-01-2006 **M903.12V** 3/5

POST TYPE	PIPE COLUMN O.D. (mm)	PIPE COLUMN WEIGHT kg/m	DIMENSION (mm)	SPLIT (mm)	BASE PLATE SIZE✱✱ (mm)	ANCHOR BOLT NO.	ANCHOR BOLT DIA. (mm)	C (mm)	FA (mm)	FB (mm)	FC (mm)	FD (mm)	FH (mm)	COLLAR REINFORCEMENT MOMENT-C1 BARS	MOMENT-C1 LENGTH (mm)	SHEAR-C2 BARS	SHEAR-C2 LENGTH (mm)	SKIN-C3 BARS	SKIN-C3 LENGTH (mm)	SHAFT REINFORCEMENT LONGITUDINAL S1 QUANTITY	LONGITUDINAL S1 BARS	SHEAR-S2 BARS	SHEAR-S2 LENGTH (mm)	REBAR TOTAL (kg) TYPE A	REBAR TOTAL (kg) TYPE C	CONCRETE (m^3) TYPE A	CONCRETE (m^3) TYPE C
III	450	139.07	215	0	810 x 810 x 44	10	51		1.2	2.25	.45	1.35	4.2	#19	150	#13	300	#13	300	19	#32	#16	150	921	926	10.3	11.1
IV	500	154.97	215	0	860 x 860 x 50	10	57		1.2	2.25	.45	1.35	4.2	#19	150	#13	300	#13	300	19	#32	#16	150	921	926	10.3	11.2
V	450	139.07	215	180	990 x 810 x 50	10	57		1.5	4.05	1.2	1.65	5.1	#19	150	#13	300	#13	300	22	#36	#16	150	1707	1715	22.0	23.5
VI	500	154.97	215	205	1070 x 860 x 57	10	57		1.5	4.2	1.2	1.8	5.4	#19	150	#13	300	#13	300	27	#36	#16	150	2054	2062	26.1	27.7
VII	600	186.75	230	205	1170 x 970 x 57	10	64		1.5	4.2	1.2	1.8	5.4	#19	150	#13	300	#13	300	27	#36	#16	150	2054	2062	26.4	28.2
VIII	600	186.75	230	205	1170 x 970 x 57	10	64		1.2	3.75	.9	1.95	6.0	#19	150	#13	300	#13	300	31	#36	#16	150	2378	2385	28.1	29.6

✱✱ BASE PLATES, PEDESTAL, AND FOUNDATIONS, LONGER SIDES SHALL BE NORMAL TO AXIS OF SIGN.

✱ 100 mm CLEAR FOR FD ≤ 1220 mm
140 mm CLEAR FOR FD > 1220 mm
VERTICAL LEG OF C3 BARS SHALL BE PLACED INSIDE SHAFT S2 BARS

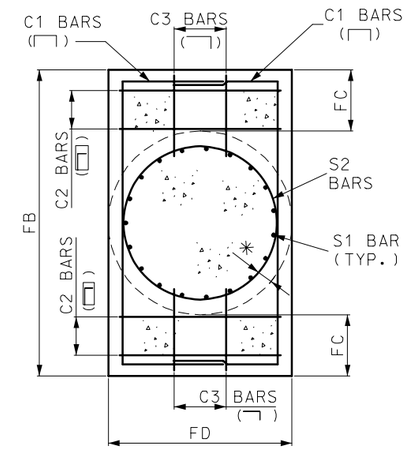

SECTION B-B
TYPICAL SECTION SHOWING REINFORCING STEEL

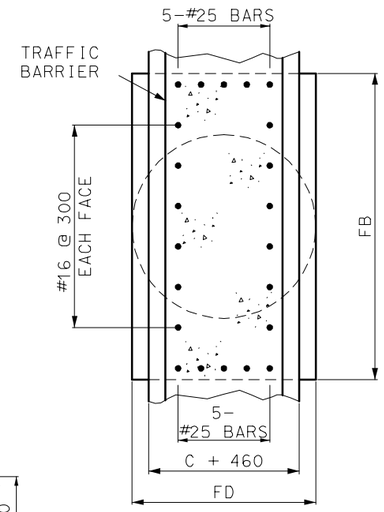

SECTION A-A

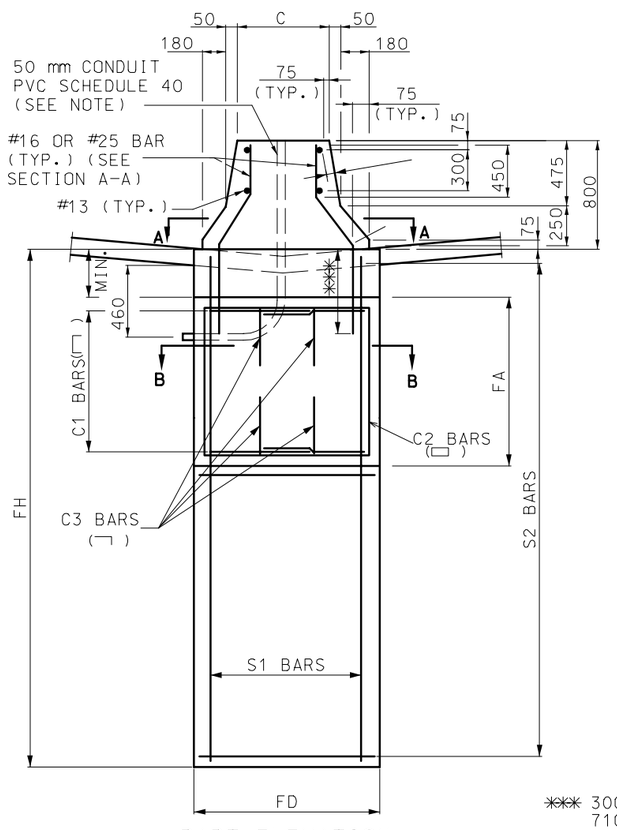

PART ELEVATION
(TYPE A CONCRETE TRAFFIC BARRIER)

✱✱✱ 300 mm (#16 BAR)
710 mm (#25 BAR)

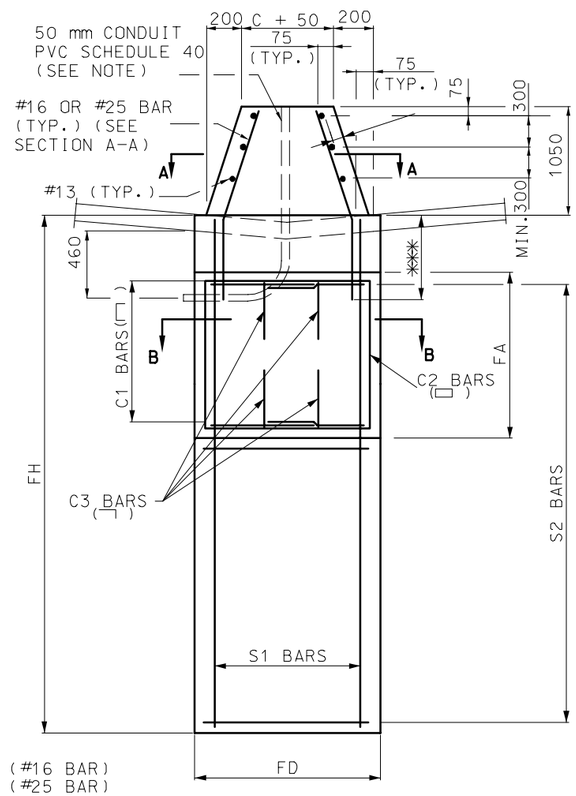

PART ELEVATION
(TYPE C CONCRETE TRAFFIC BARRIER)

DETAILS OF ALTERNATE PEDESTAL
(TO BE USED ADJACENT TO TYPE "A" OR "C" MEDIAN BARRIER)

NOTE:
THE 50 mm CONDUIT IN THE CONCRETE PEDESTAL SHALL BE PVC SCHEDULE 40 AND SHALL BE PLACED WITH A MIN. RADIUS BEND OF 240 mm.

GENERAL NOTES:

ALL DIMENSIONS SHOWN ARE IN mm UNLESS OTHERWISE NOTED.

MINIMUM CLEARANCE TO REINFORCEMENT IS 75 mm EXCEPT AS SHOWN.

WHEN ROCK IS ENCOUNTERED AT A DEPTH NOT EXCEEDING "FH"/2 FOR FD > 900 mm OR "FH"/4 FOR FD ≤ 90 mm, THE DIMENSION "FH" MAY BE ADJUSTED TO A MINIMUM OF 3 X "FD", SUBJECT TO APPROVAL BY THE ENGINEER.

CONTACT THE ENGINEER IF WATER TABLE IS ENCOUNTERED DURING EXCAVATION.

ASTM A 106 GRADE B STEEL PIPE OR A TAPERED TUBE OF EQUIVALENT SIZE AND THICKNESS MAY BE SUBSTITUTED FOR PIPE POST.

ALL STEEL PIPE COLUMNS SHALL BE EITHER GRADE "B" SEAMLESS STEEL PIPE OR GRADE "B" ELECTRIC RESISTANCE WELDED STEEL PIPE; A.S.T.M. SPECIFICATION A53.

ALL STRUCTURES SHALL BE GROUNDED.

BURR THREADS ON ALL ANCHOR BOLTS.

PIPE COLUMN, BASE PLATE, ANCHOR BOLTS AND NOTES PERTAINING TO THESE ITEMS HAVE BEEN OMITTED FOR CLARITY. REFER TO SHEET NO. 3 OF 5 FOR DETAILS OF THESE ITEMS.

GROUND LUGS SHALL BE LOCATED INSIDE COLUMN NEAR HAND HOLE.

MISSOURI HIGHWAYS AND TRANSPORTATION COMMISSION

OVERHEAD SIGN TRUSSES
BUTTERFLY AND CANTILEVER STRUCTURAL STEEL

DATE:_____ EFFECTIVE: 06-01-2006 **M903.12V** 4/5

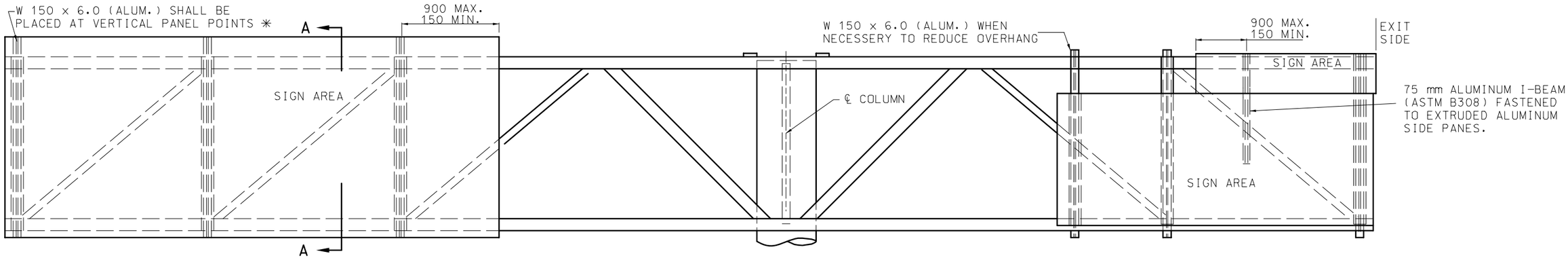

TYPICAL ELEVATION OF SIGNS COMPONENTS

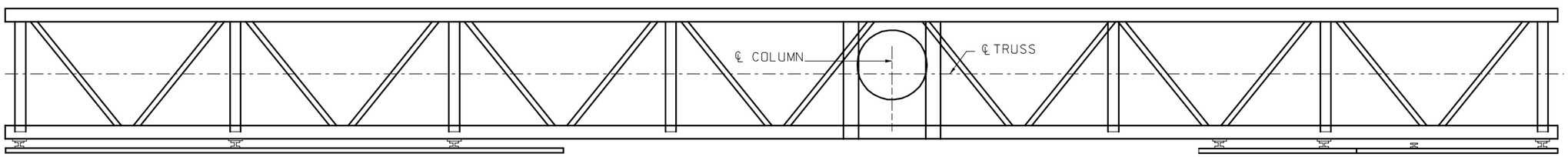

TYPICAL PLAN OF SIGN COMPONENTS

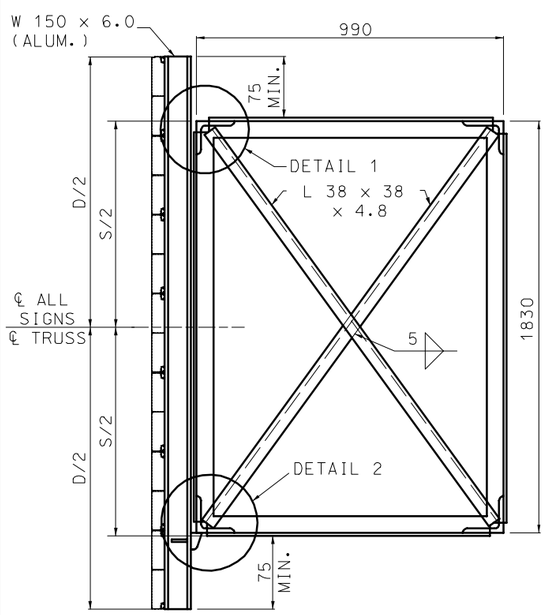

SECTION A-A
TYPICAL SECTION OF SIGN SUPPORT

NOTE:
"D" = GREATEST OVERALL DEPTH OF ANY SIGNS ON TRUSSES.

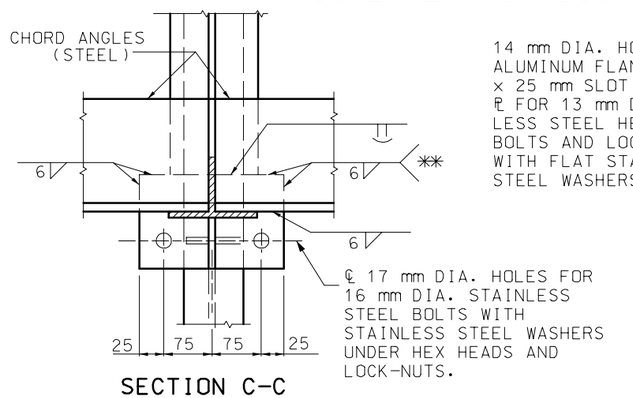

SECTION C-C

14 mm DIA. HOLES IN ALUMINUM FLANGE. 14 mm x 25 mm SLOT IN 16 mm ℄ FOR 13 mm DIA. STAINLESS STEEL HEX HEAD BOLTS AND LOCK-NUTS WITH FLAT STAINLESS STEEL WASHERS.

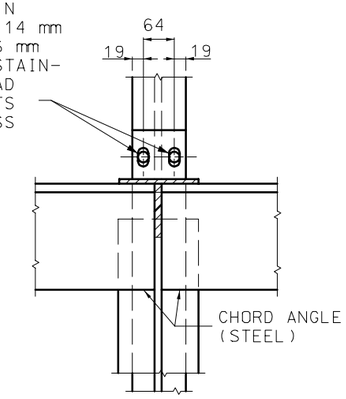

SECTION F-F

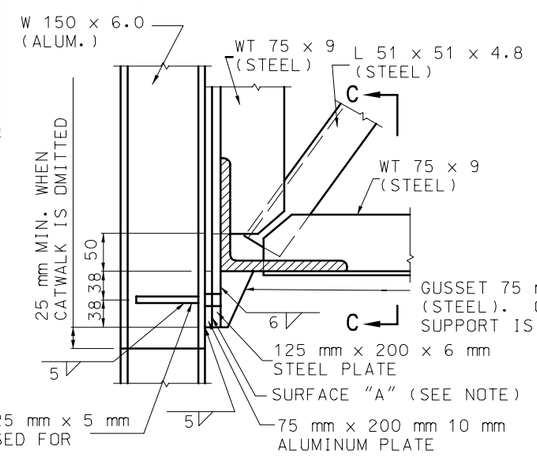

DETAIL 2

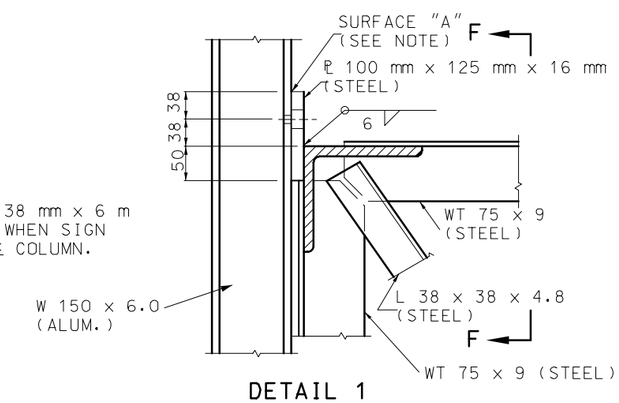

DETAIL 1

GENERAL NOTES:

ALL DIMENSIONS SHOWN ARE IN mm UNLESS OTHERWISE NOTED.

EXIT NO. PANELS SHALL BE MONTED FLUSH WITH THE EXIT SIDE OF THE GUIDE SIGN.

ALL SIGNS SHALL BE CENTERED VERTICALLY ABOUT THE HORIZONTAL ℄ OF THE TRUSS.

SEE STANDARD PLAN 903.03 FOR SIGN MOUNTING DETAILS.

MISSOURI HIGHWAYS AND TRANSPORTATION COMMISSION

OVERHEAD SIGN TRUSSES
STRUCTURAL STEEL
BUTTERFLY & CANTILEVER

DATE:_____ | EFFECTIVE: 06-01-2006 | **M903.12V** | 5/5