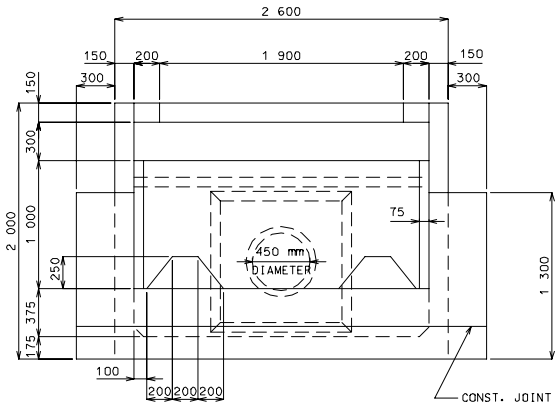

DOWNSTREAM ELEVATION

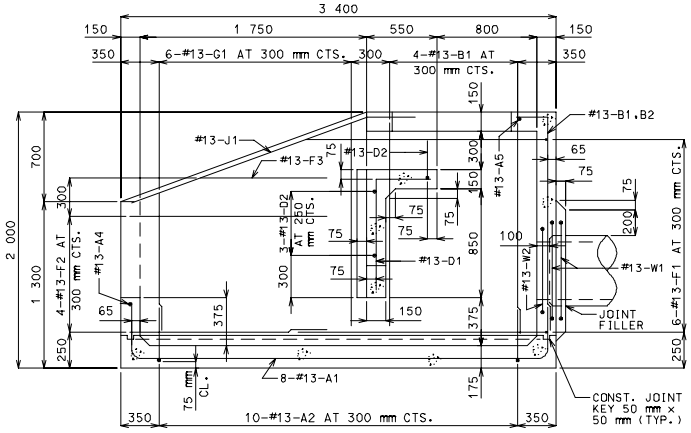

SECTION A – A

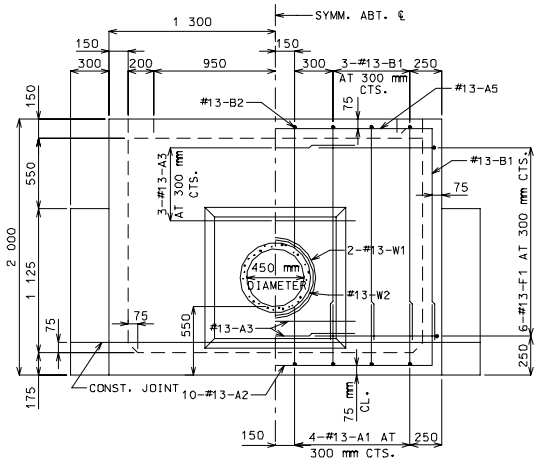

UPSTREAM ELEVATION

NOTE: BEND OR CUT A1 BARS IN FIELD TO CLEAR PIPE.

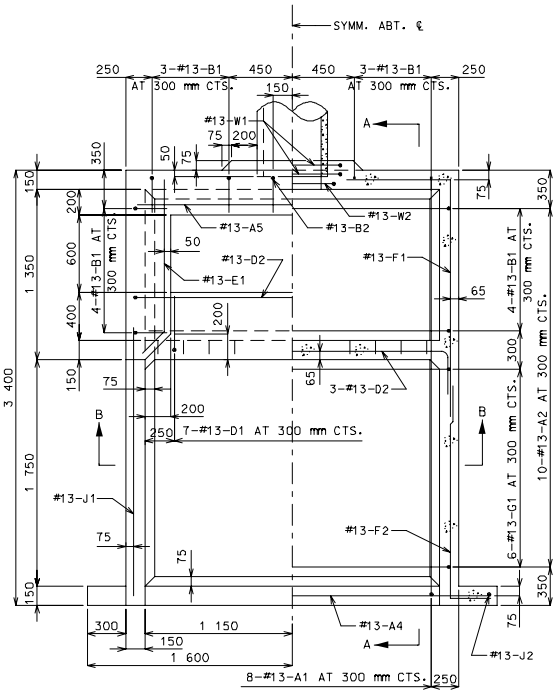

HALF PLAN HALF HORIZONTAL SECTION

GENERAL NOTES:

DESIGN UNIT STRESSES

CLASS B CONCRETE f'c = 21 MPa
REINFORCING STEEL (GRADE 420) fy = 420 MPa

REINFORCING STEEL

MINIMUM CLEARANCE TO REINFORCING STEEL SHALL BE 40 mm UNLESS SHOWN OTHERWISE.

DIMENSIONS

ALL DIMENSIONS ARE SHOWN IN MILLIMETERS (mm) UNLESS OTHERWISE SPECIFIED.

DRAWINGS ARE NOT TO SCALE. FOLLOW DIMENSIONS.

ESTIMATED QUANTITIES		
ITEM		TOTAL
CLASS B CONCRETE	CU. m	4.7
REINFORCING STEEL	kg	228

COMPLETE BILL OF REINFORCING STEEL

NO. REQ'D	MARK NO. SIZE	MARK NO. MARK	SHAPE NO.	VARIES (V)	NO. EACH	DIMENSIONS B mm	C mm	D mm	E mm	F mm	H mm	K mm	NOMINAL LENGTH mm	ACTUAL LENGTH mm	WEIGHT kg
8	#13	A1	11				425	3250	800				4475	4425	35
10	#13	A2	11				800	2450	800				4050	4000	40
5	#13	A3	20			1750							1750	1750	9
1	#13	A4	20			3050							3050	3050	3
1	#13	A5	20			2500							2500	2500	2
14	#13	B1	19			1650	225						1875	1850	26
2	#13	B2	19			825	200						1025	1000	2
7	#13	D1	19			875	400						1275	1250	9
4	#13	D2	11			300	2450	300					3050	3000	12
1	#13	D3	15			610	800	610	475	375	475	375	2015	2000	2
2	#13	D4	14			300	125	600			475	375	1025	975	2
2	#13	E1	23			145	1200				100	100	1345	1325	3
12	#13	F1	19			875	1950						2825	2800	33
8	#13	F2	19			325	1750						2075	2050	16
2	#13	F3	20			1250							1250	1250	2
12	#13	G1	20	V	2	1625							1625	1625	
						1075	(INCREMENT = 110 mm)						1075	1075	16
2	#13	J1	20			2500							2500	2500	5
2	#13	J2	19			1200	775						1975	1950	4
2	#13	W1	16			700							2535	2535	5
1	#13	W2	16			600							2220	2220	2

BENDING DIAGRAMS

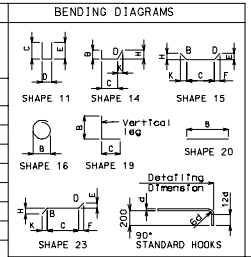

ALL STANDARD HOOKS AND BENDS OTHER THAN 180 DEG. TO BE BENT WITH SAME PROCEDURE AS FOR 90 DEG. STANDARD HOOKS.

HOOKS AND BENDS SHALL BE IN ACCORDANCE WITH THE PROCEDURES AS SHOWN ON THIS SHEET.

NOMINAL LENGTHS ARE BASED ON OUT TO OUT DIMENSIONS SHOWN IN BENDING DIAGRAMS AND ARE LISTED FOR FABRICATORS USE.

PAYWEIGHTS ARE BASED ON ACTUAL LENGTHS.

LENGTH = TOTAL LENGTHS ARE MEASURED ALONG CENTERLINE BAR TO THE NEAREST 25 mm.

V - BAR DIMENSIONS VARY IN EQUAL INCREMENTS BETWEEN DIMENSIONS SHOWN ON THIS LINE AND THE FOLLOWING LINE.

NO.EA. = NUMBER OF BARS OF EACH LENGTH.

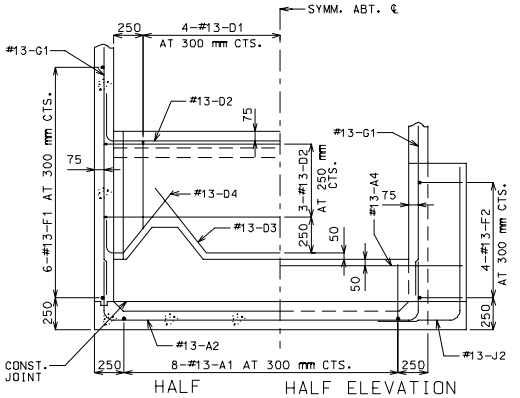

HALF SECTION B-B HALF ELEVATION OF LOWER BAFFLE AND WING

NOTE: BEND OR CUT D1 BARS IN FIELD TO CLEAR NOTCH IN BAFFLE WALL.

MISSOURI HIGHWAY AND TRANSPORTATION COMMISSION

PIPE CULVERT HEADWALL
ENERGY DISSIPATOR (IMPACT TYPE) FOR 450 mm CONCRETE PIPE

DATE _____ EFFECTIVE: 07-01-2001 M604.10E 1/1