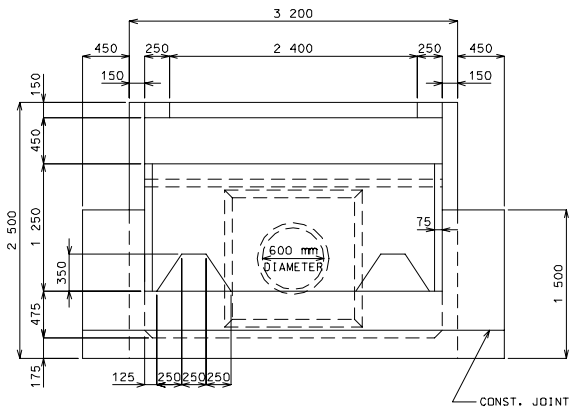

DOWNSTREAM ELEVATION

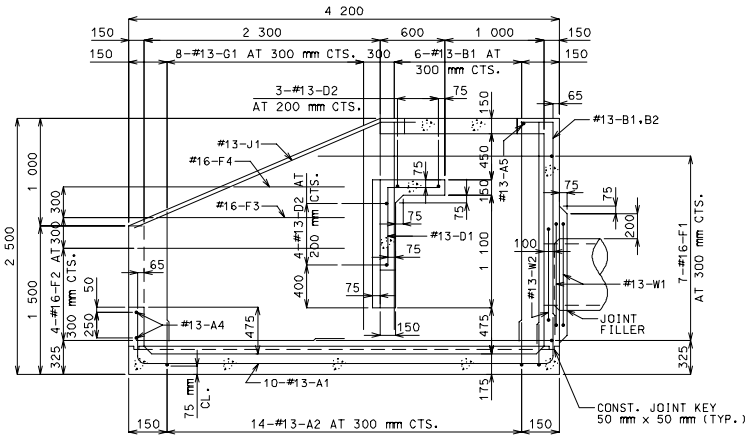

SECTION A – A

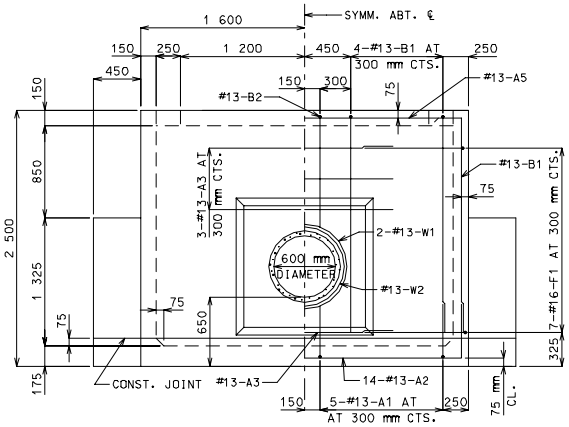

UPSTREAM ELEVATION

NOTE: BEND OR CUT A1 BARS IN FIELD TO CLEAR PIPE.

GENERAL NOTES:

DESIGN UNIT STRESSES

CLASS B CONCRETE f'c = 21 MPa
REINFORCING STEEL (GRADE 420) fy = 420 MPa

REINFORCING STEEL

MINIMUM CLEARANCE TO REINFORCING STEEL SHALL BE 40 mm UNLESS SHOWN OTHERWISE.

DIMENSIONS

ALL DIMENSIONS ARE SHOWN IN MILLIMETERS (mm) UNLESS OTHERWISE SPECIFIED.

DRAWINGS ARE NOT TO SCALE. FOLLOW DIMENSIONS.

ESTIMATED QUANTITIES		
ITEM		TOTAL
CLASS B CONCRETE	CU. m	7.3
REINFORCING STEEL	kg	392

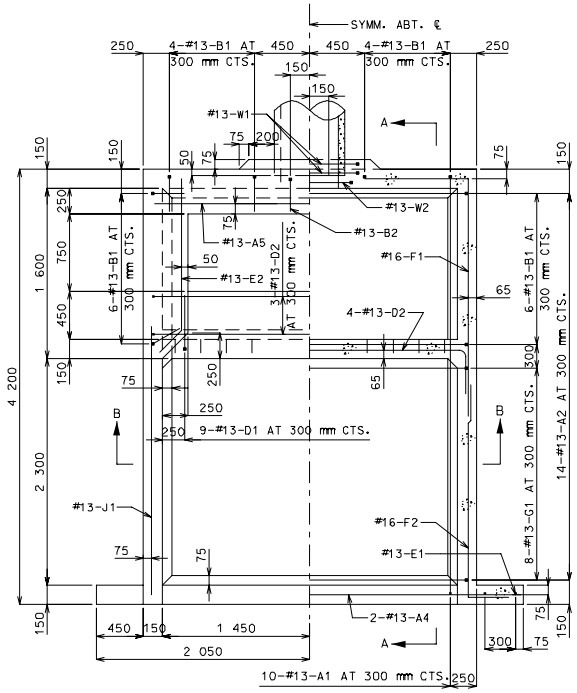

HALF PLAN HALF HORIZONTAL SECTION

COMPLETE BILL OF REINFORCING STEEL														
NO. REQ'D	SIZE	MARK NO.	SHAPE NO.	VARIES (V)	NO. EACH	DIMENSIONS B	C	D	E	F	H	K	NOMINAL LENGTH	ACTUAL LENGTH	WEIGHT
						mm	mm	mm	mm	mm	mm	mm	mm	mm	kg
10	13	A1	11				500	4050	600				5150	5100	51
14	13	A2	11				600	3050	600				4250	4200	58
4	13	A3	20			1800							1800	1800	7
2	13	A4	20			3950							3950	3950	8
1	13	A5	20			3050							3050	3050	3
20	13	B1	19			2250	275						2525	2500	50
2	13	B2	19			1100	200						1300	1275	3
9	13	D1	19			1100	450						1550	1525	14
7	13	D2	11				300	2900	300				3500	3450	24
1	13	D3	15			1000	1070	1000	810	580	810	580	3065	3050	3
2	13	D4	14			500	160	1000			810	580	1660	1625	3
4	13	E1	20			1200							1200	1200	5
2	13	E2	23			320	1450				225	225	1770	1750	3
2	13	E3	20			800							800	800	2
14	16	F1	19			1025	2475						3500	3450	75
8	16	F2	19			475	2050						2525	2475	31
2	16	F3	20			1900							1900	1900	6
2	16	F4	20			1175							1175	1175	4
16	13	G1	20	V	2	2150							2150	2150	
						1275	(INCREMENT = 125 mm)						1275	1275	27
2	13	J1	20			3100							3100	3100	6
2	13	W1	16			850							3005	3005	6
1	13	W2	16			750							2690	2690	3

BENDING DIAGRAMS

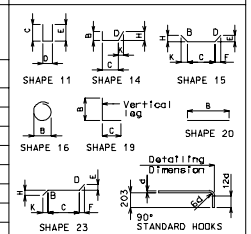

ALL STANDARD HOOKS AND BENDS OTHER THAN 180 DEG. TO BE BENT WITH SAME PROCEDURE AS FOR 90 DEG. STANDARD HOOKS.

HOOKS AND BENDS SHALL BE IN ACCORDANCE WITH THE PROCEDURES AS SHOWN ON THIS SHEET.

NOMINAL LENGTHS ARE BASED ON OUT TO OUT DIMENSIONS SHOWN IN BENDING DIAGRAMS AND ARE LISTED FOR FABRICATORS USE.

PAYWEIGHTS ARE BASED ON ACTUAL LENGTHS.

LENGTH = TOTAL LENGTHS ARE MEASURED ALONG CENTERLINE BAR TO THE NEAREST 25 mm.

V - BAR DIMENSIONS VARY IN EQUAL INCREMENTS BETWEEN DIMENSIONS SHOWN ON THIS LINE AND THE FOLLOWING LINE.

NO.EA. = NUMBER OF BARS OF EACH LENGTH.

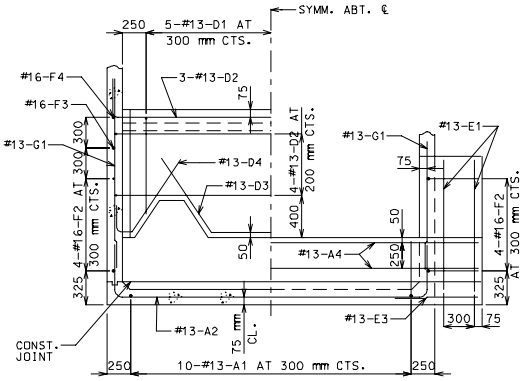

HALF SECTION B-B HALF ELEVATION OF LOWER BAFFLE AND WING

NOTE: BEND OR CUT D1 BARS IN FIELD TO CLEAR NOTCH IN BAFFLE WALL.

MISSOURI HIGHWAY AND TRANSPORTATION COMMISSION

PIPE CULVERT HEADWALL
ENERGY DISSIPATOR (IMPACT TYPE) FOR 600 mm CONCRETE PIPE

DATE _____ EFFECTIVE: 07-01-2001 M604.11E 1/1