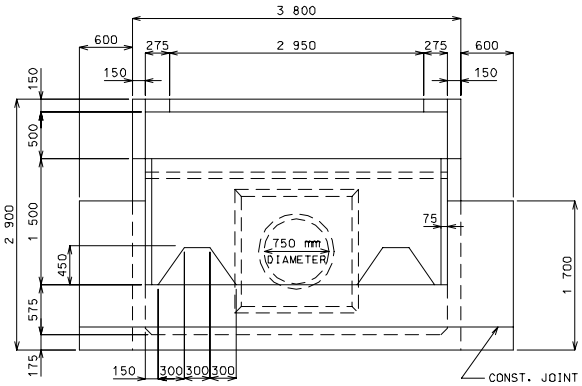

DOWNSTREAM ELEVATION

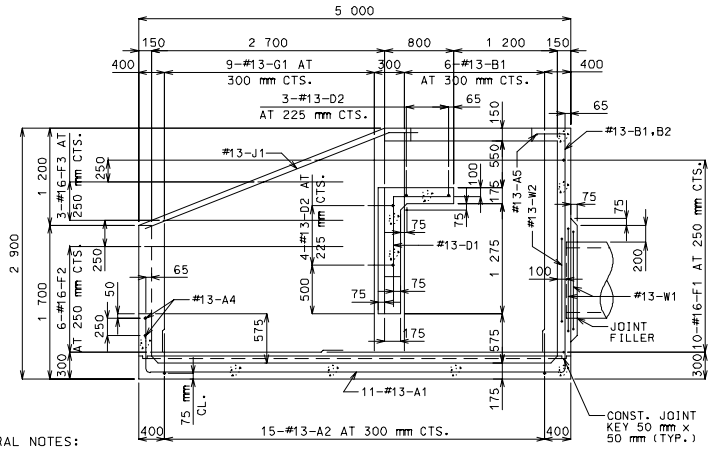

SECTION A – A

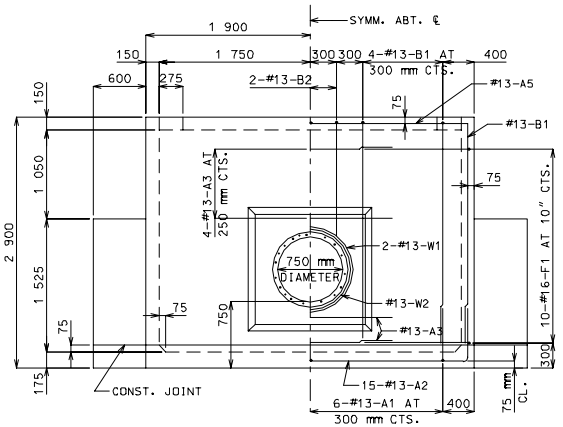

UPSTREAM ELEVATION

NOTE: BEND OR CUT A1 BARS IN FIELD TO CLEAR PIPE.

GENERAL NOTES:

DESIGN UNIT STRESSES

CLASS B CONCRETE f'c = 21 MPa
REINFORCING STEEL (GRADE 420) fy = 420 MPa

REINFORCING STEEL

MINIMUM CLEARANCE TO REINFORCING STEEL SHALL BE 40 mm UNLESS SHOWN OTHERWISE.

DIMENSIONS

ALL DIMENSIONS ARE SHOWN IN MILLIMETERS (mm) UNLESS OTHERWISE SPECIFIED.

DRAWINGS ARE NOT TO SCALE. FOLLOW DIMENSIONS.

ESTIMATED QUANTITIES		
ITEM		TOTAL
CLASS B CONCRETE	CU. m	10.5
REINFORCING STEEL	kg	546

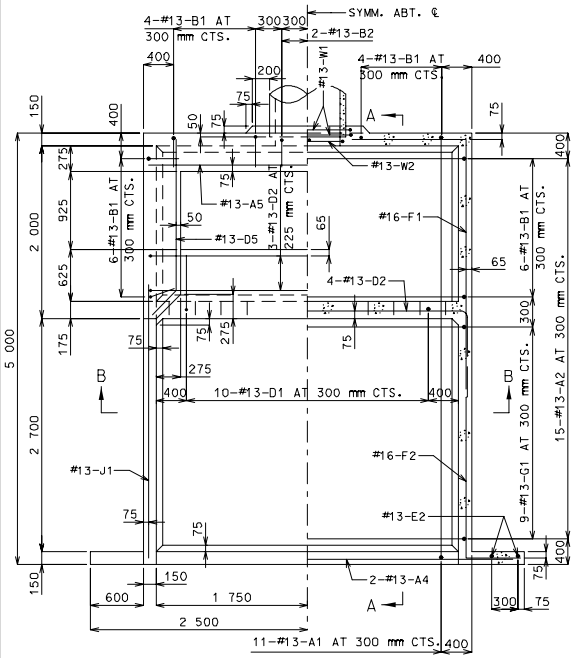

HALF PLAN HALF HORIZONTAL SECTION

COMPLETE BILL OF REINFORCING STEEL														
					DIMENSIONS									
NO. REQ'D	MARK NO. SIZE	MARK NO. MARK	SHAPE NO.	VARIES (V)	NO. EACH	B	C	D	E	F	H	K	NOMINAL LENGTH	ACTUAL LENGTH	WEIGHT
						mm	mm	mm	mm	mm	mm	mm	mm	mm	kg
11	#13	A1	11				650	4850	650				6150	6100	67
15	#13	A2	11				650	3650	650				4950	4900	73
6	#13	A3	20			2000							2000	2000	12
2	#13	A4	20			4900							4900	4900	10
1	#13	A5	20			3700							3700	3700	4
20	#13	B1	19			2500	300						2800	2775	55
3	#13	B2	19			1250	300						1550	1525	5
10	#13	D1	19			1300	625						1925	1900	19
7	#13	D2	11				300	3650	300				4250	4200	29
1	#13	D3	15			1265	1350	1265	1050	700	1050	700	3875	3850	4
2	#13	D4	14			450	200	1265			1050	700	1915	1875	4
2	#13	D5	23			355	1650				250	250	2005	2000	4
2	#13	E1	20			1000							1000	1000	2
4	#13	E2	20			1575							1575	1575	6
20	#16	F1	19			2775	1275						4050	4025	125
12	#16	F2	19			625	2550						3175	3150	59
6	#16	F3	20	V	2	1050							1050	1050	
						2200	(INCREMENT = 575 mm)						2200	2200	15
18	#13	G1	20	V	2	1500							1500	1500	
						2500	(INCREMENT = 125 mm)						2500	2500	36
2	#13	J1	20			3500							3500	3500	7
2	#13	W1	16			1000							3480	3480	7
1	#13	W2	16			850							3005	3005	3

BENDING DIAGRAMS

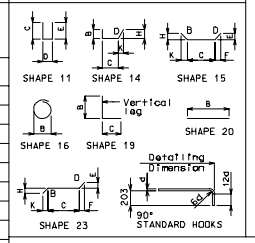

ALL STANDARD HOOKS AND BENDS OTHER THAN 180 DEG. TO BE BENT WITH SAME PROCEDURE AS FOR 90 DEG. STANDARD HOOKS.

HOOKS AND BENDS SHALL BE IN ACCORDANCE WITH THE PROCEDURES AS SHOWN ON THIS SHEET.

NOMINAL LENGTHS ARE BASED ON OUT TO OUT DIMENSIONS SHOWN IN BENDING DIAGRAMS AND ARE LISTED FOR FABRICATORS USE.

PAYWEIGHTS ARE BASED ON ACTUAL LENGTHS.

LENGTH = TOTAL LENGTHS ARE MEASURED ALONG CENTERLINE BAR TO THE NEAREST 25 mm.

V - BAR DIMENSIONS VARY IN EQUAL INCREMENTS BETWEEN DIMENSIONS SHOWN ON THIS LINE AND THE FOLLOWING LINE.

NO.EA. = NUMBER OF BARS OF EACH LENGTH.

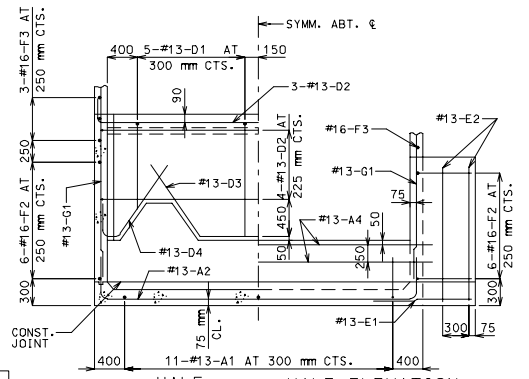

HALF SECTION B-B

HALF ELEVATION OF LOWER BAFFLE AND WING

NOTE: BEND OR CUT D1 BARS IN FIELD TO CLEAR NOTCH IN BAFFLE WALL.

MISSOURI HIGHWAY AND TRANSPORTATION COMMISSION

PIPE CULVERT HEADWALL
ENERGY DISSIPATOR (IMPACT TYPE) FOR 750 mm CONCRETE PIPE

DATE _____ EFFECTIVE: 07-01-2001 M604.12E 1/1