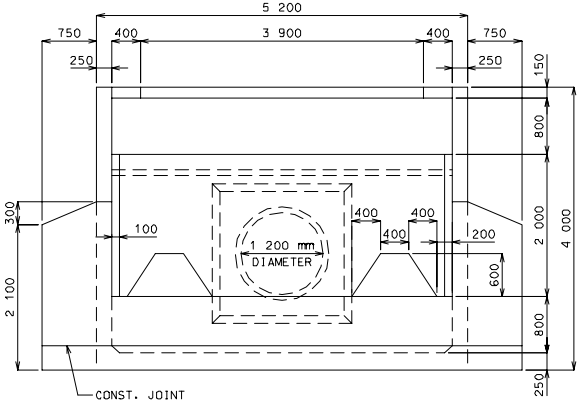

DOWNSTREAM ELEVATION

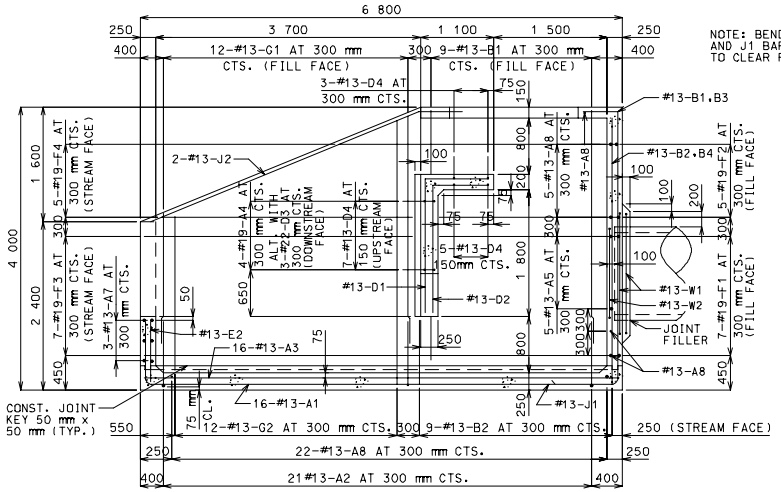

SECTION A – A

NOTE: BEND OR CUT A1 AND J1 BARS IN FIELD TO CLEAR PIPE.

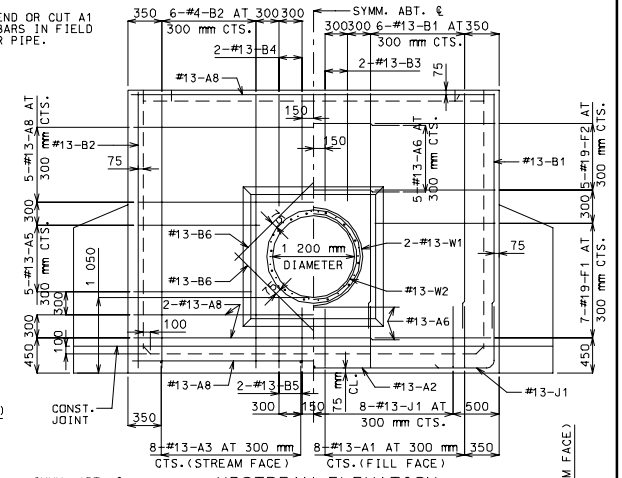

UPSTREAM ELEVATION

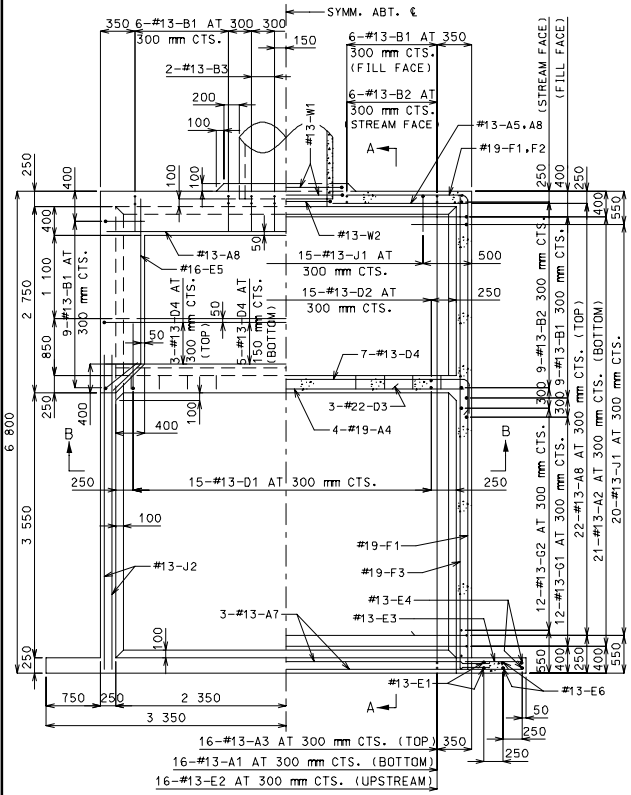

HALF PLAN HALF HORIZONTAL SECTION

COMPLETE BILL OF REINFORCING STEEL															
NO. REQ'D	MARK NO. SIZE	MARK	SHAPE NO.	VARIES (V)	NO. EACH	DIMENSIONS B	C	D	E	F	H	K	NOMINAL LENGTH	ACTUAL LENGTH	WEIGHT
						mm	mm	mm	mm	mm	mm	mm	mm	mm	kg
16	#13	A1	11				925	6650	925				8500	8450	134
21	#13	A2	11				925	5050	925				6900	6850	143
16	#13	A3	20			6650							6650	6650	106
4	#19	A4	20			5050							5050	5050	45
10	#13	A5	20			1800							1800	1800	18
7	#13	A6	20			2500							2500	2500	17
6	#13	A7	20			5410							5410	5410	32
30	#13	A8	20			5050							5050	5050	151
30	#13	B1	19			3500	525						4025	4000	119
30	#13	B2	20			3850							3850	3850	115
4	#13	B3	19			1500	500						2000	1975	8
4	#13	B4	20			1500							1500	1500	6
4	#13	B5	20			850							850	850	3
4	#13	B6	20			1400							1400	1400	6
15	#13	D1	19			1850	950						2800	2775	41
15	#13	D2	19			1800	850						2650	2625	39
3	#22	D3	20			3600							3600	3600	33
15	#13	D4	11				300	5050	300				5650	5650	83
2	#13	D5	15			1535	1850	1535	1275	850	1275	850	4915	4900	10
4	#13	D6	14			300	350	1535			1275	850	2185	2150	9
4	#13	E1	20			2100							2100	2100	8
16	#13	E2	20			925							925	925	15
16	#13	E3	20			900							900	900	14
4	#13	E4	25			2000	720	200			300	650	2920	2900	12
2	#16	E5	15			535	2350				375	375	2885	2875	9
4	#13	E6	20			2200							2200	2200	9
14	#19	F1	19			6650	1700						8350	8325	260
10	#19	F2	19	V	2	3175	1700						4875	4825	
						6150	1700	(INCREMENT = 745 mm)					7850	7800	141
14	#19	F3	19			6650	825						7475	7450	233
10	#19	F4	20	V	2	3175							3175	3175	
						6150		(INCREMENT = 745 mm)					6150	6150	104
24	#13	G1	20	V	2	2000							2000	2000	
						3350		(INCREMENT = 125 mm)					3350	3350	64
24	#13	G2	20	V	2	2450							2450	2450	
						3800		(INCREMENT = 125 mm)					3800	3800	75
55	#13	J1	19			800	800						1600	1575	86
4	#13	J2	20			4400							4400	4400	17
2	#13	W1	16			1400							4735	4735	9
1	#13	W2	16			1300							4420	4420	4

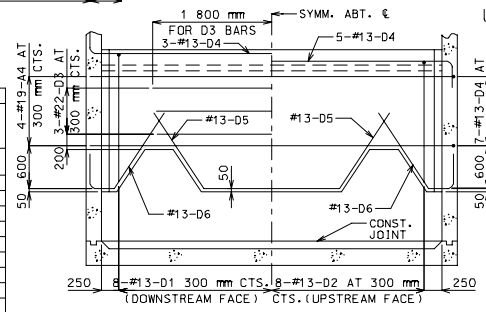

SECTION B-B

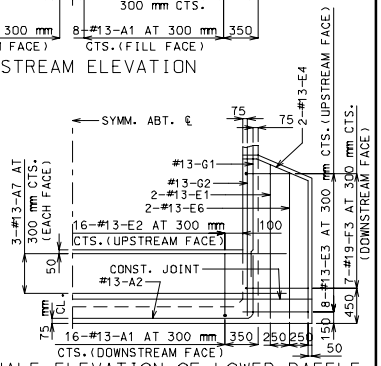

HALF ELEVATION OF LOWER BAFFLE AND WING

ESTIMATED QUANTITIES		
ITEM		TOTAL
CLASS B CONCRETE	CU. m	29.7
REINFORCING STEEL	Kg	2151

BENDING DIAGRAMS

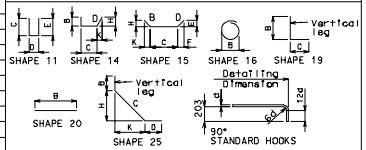

ALL STANDARD HOOKS AND BENDS OTHER THAN 180 DEG. TO BE BENT WITH SAME PROCEDURE AS FOR 90 DEG. STANDARD HOOKS.

HOOKS AND BENDS SHALL BE IN ACCORDANCE WITH THE PROCEDURES AS SHOWN ON THIS SHEET.

NOMINAL LENGTHS ARE BASED ON OUT TO OUT DIMENSIONS SHOWN IN BENDING DIAGRAMS AND ARE LISTED FOR FABRICATORS USE.

PAYWEIGHTS ARE BASED ON ACTUAL LENGTHS.

LENGTH = TOTAL LENGTHS ARE MEASURED ALONG CENTERLINE BAR TO THE NEAREST 25 mm.

V – BAR DIMENSIONS VARY IN EQUAL INCREMENTS BETWEEN DIMENSIONS SHOWN ON THIS LINE AND THE FOLLOWING LINE.

NO.EA. = NUMBER OF BARS OF EACH LENGTH.

GENERAL NOTES:

DESIGN UNIT STRESSES

CLASS B CONCRETE f'c = 21 MPa
REINFORCING STEEL (GRADE 420) fy = 420 MPa

REINFORCING STEEL

MINIMUM CLEARANCE TO REINFORCING STEEL SHALL BE 40 mm UNLESS SHOWN OTHERWISE.

DIMENSIONS

ALL DIMENSIONS ARE SHOWN IN MILLIMETERS (mm) UNLESS OTHERWISE SPECIFIED.

DRAWINGS ARE NOT TO SCALE. FOLLOW DIMENSIONS.

MISSOURI HIGHWAY AND TRANSPORTATION COMMISSION

PIPE CULVERT HEADWALL
ENERGY DISSIPATOR (IMPACT TYPE) FOR 1 200 mm CONCRETE PIPE

DATE _____ | EFFECTIVE: 07-01-2001 | M604.15E | 1/1