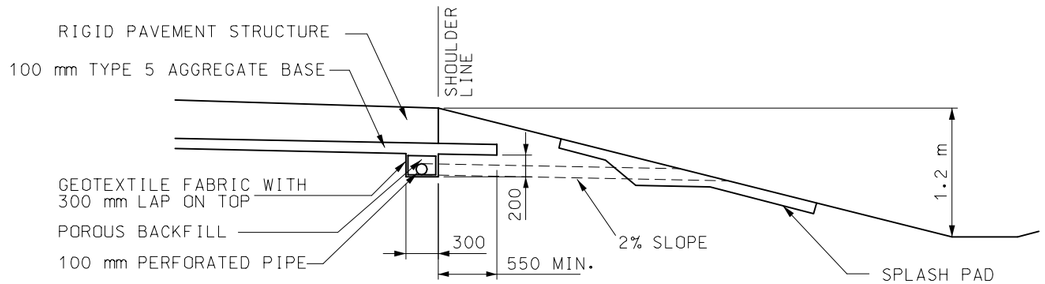

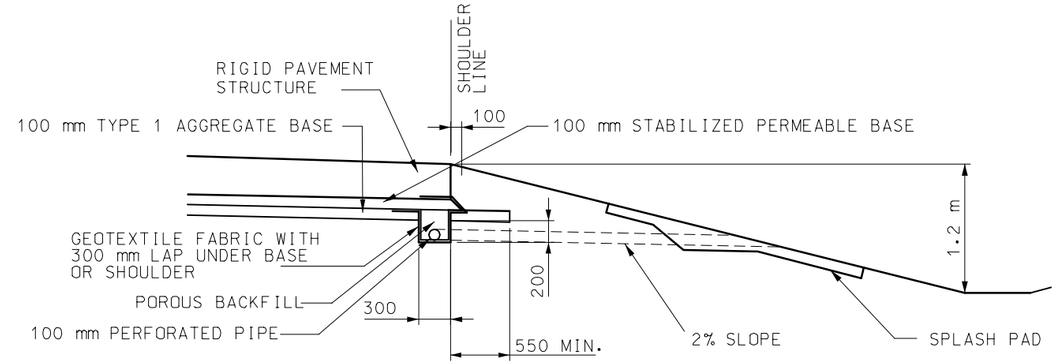

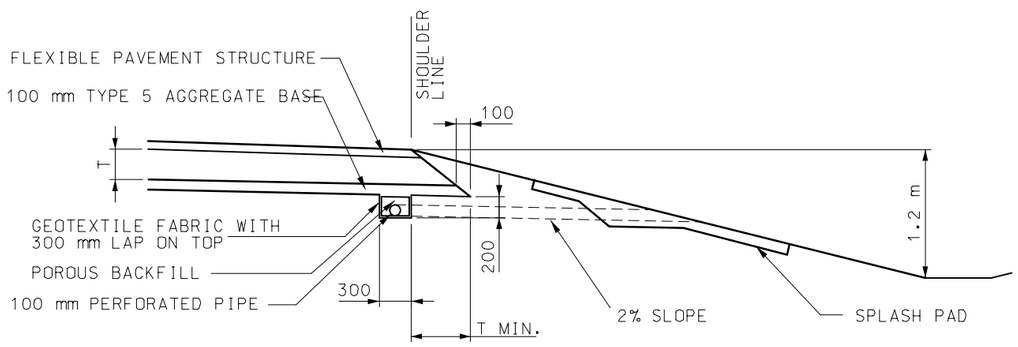

MEDIUM DUTY

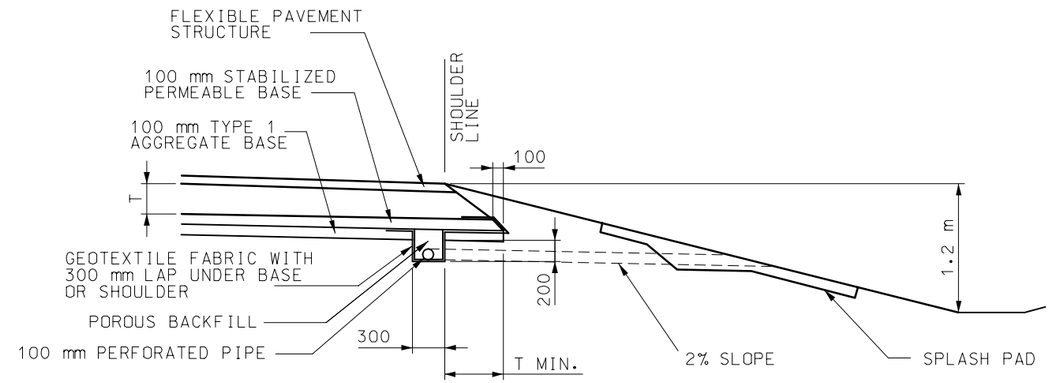

HEAVY DUTY

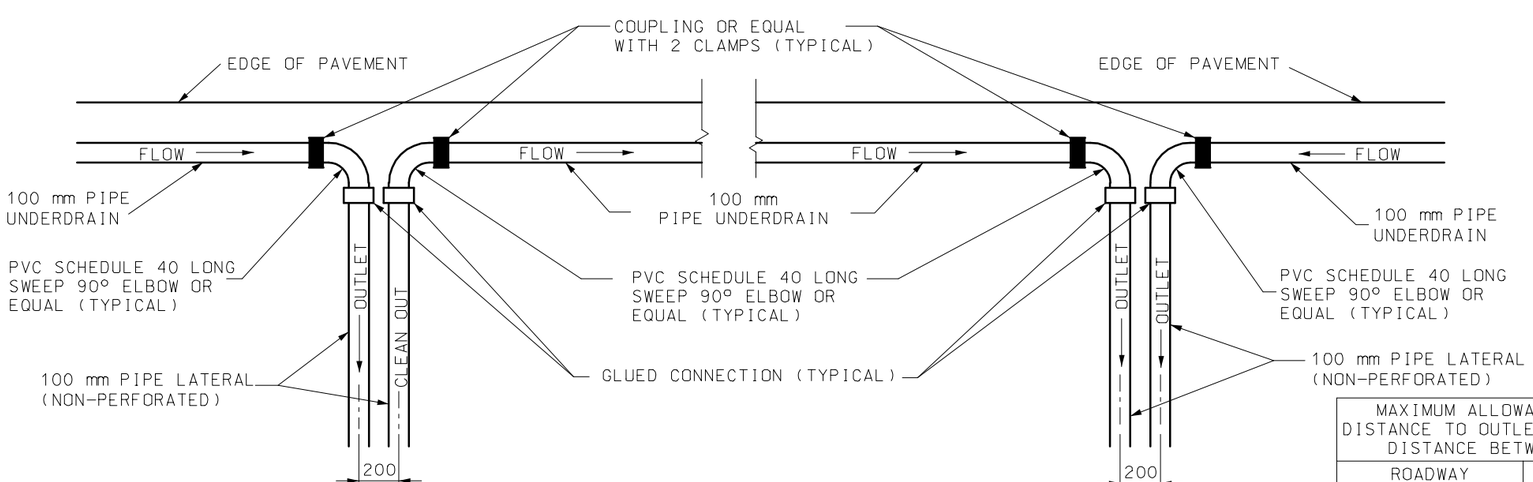

ON GRADIENT

AT SAGS

DETAIL OF PIPE AGGREGATE DRAIN OUTLETS

MAXIMUM ALLOWABLE DRAINAGE DISTANCE TO OUTLET OR SEPARATION DISTANCE BETWEEN OUTLETS	
ROADWAY PROFILE GRADIENT (%)	DISTANCE
≤ 1	75 m
> 1 AND ≤ 2	115 m
> 2	150 m

GENERAL NOTES:

ALL DIMENSIONS SHOWN ARE IN mm UNLESS OTHERWISE NOTED.

ON SUPERELEVATED CURVES PLACE LONGITUDINAL UNDERDRAIN ON LOW SIDE ONLY.

CONSTRUCT OUTLETS AT LOW POINT OF SAG CURVE.

MISSOURI HIGHWAYS AND TRANSPORTATION COMMISSION

PAVEMENT UNDERDRAINAGE
PIPE AGGREGATE PAVEMENT EDGE DRAINS

DATE:_____ EFFECTIVE: 07-01-2004 **M605.10E** 1/2

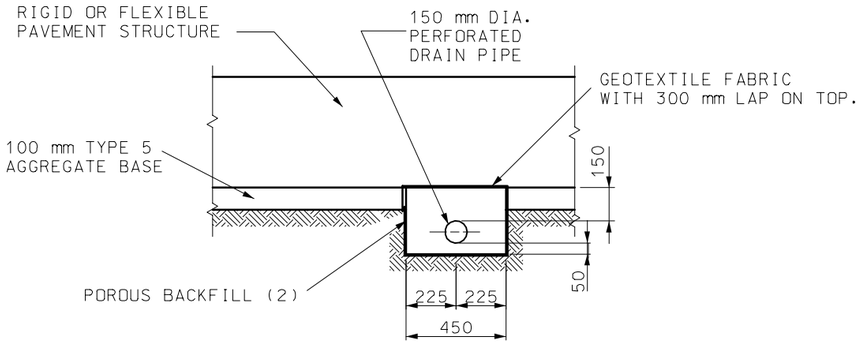

SECTION D-D
WITHOUT PERMEABLE BASE

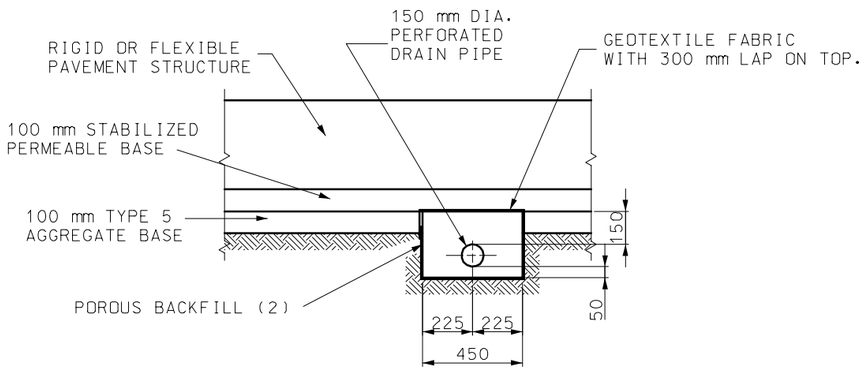

SECTION D-D
WITH PERMEABLE BASE

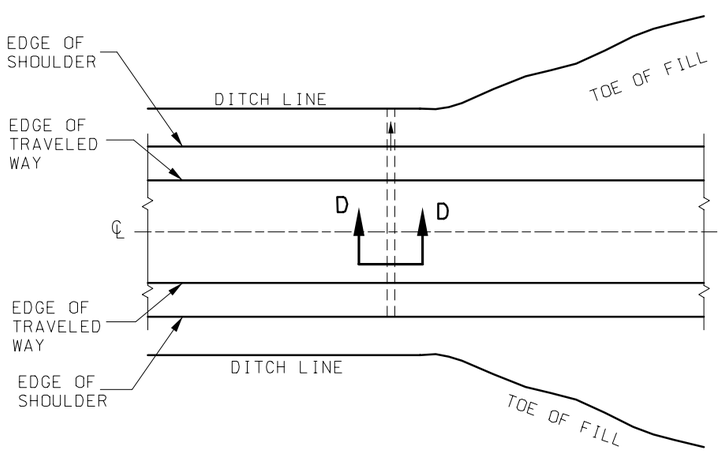

CROSS DRAIN

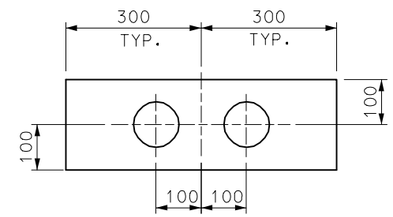

SECTION A-A

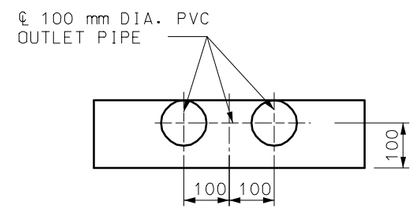

SECTION B-B

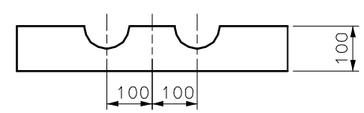

SECTION C-C

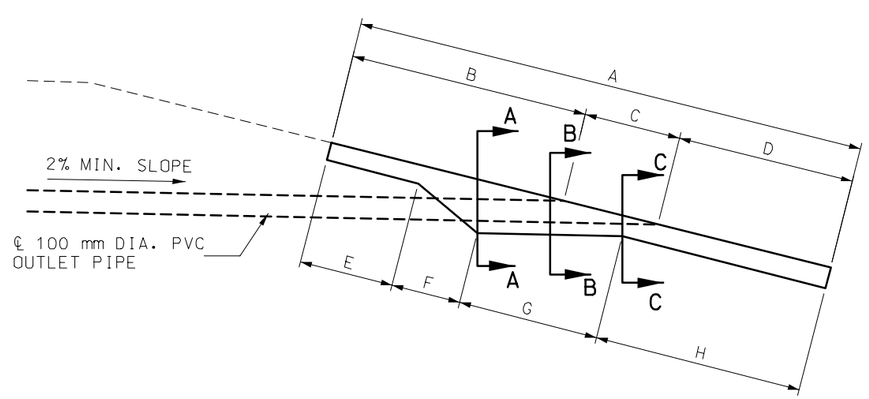

CONCRETE SPLASH PADS

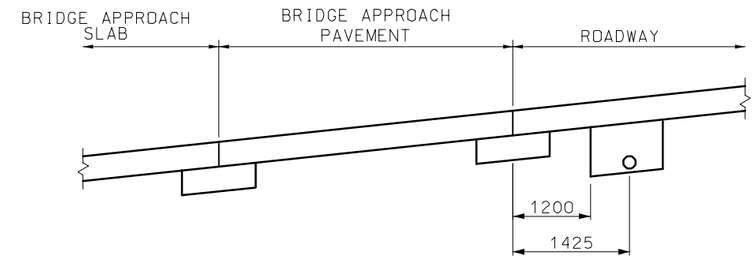

LOCATION AT BRIDGE APPROACHES

NOTE: OMIT UNDERDRAIN ON POSITIVE GRADE APPROACHING BRIDGE.

NOTE:

PRECAST CONCRETE SPLASH PADS MAY BE INSTALLED AS APPROVED BY THE ENGINEER.

TOP OF SPLASH PAD SHALL MATCH EXISTING CROSS SLOPE. CONSTRUCT BEND IN SPLASH PAD WHERE CROSS SLOPE CHANGES.

DIMENSIONS ARE APPROXIMATE AND CAN BE ADJUSTED AS DIRECTED BY THE ENGINEER.

ITEM	1:2	1:3	1:4	1:6
A	1644	1857	2085	2574
B	810	921	1038	1284
C	234	336	447	690
D	600	600	600	600
E	600	600	600	600
F	138	183	234	354
G	213	321	438	681
H	693	753	813	939
CONC.	0.11 m^3	0.13 m^3	0.15 m^3	0.19 m^3

GENERAL NOTES:

ALL DIMENSIONS SHOWN ARE IN mm UNLESS OTHERWISE NOTED.

MISSOURI HIGHWAYS AND TRANSPORTATION COMMISSION

PAVEMENT UNDERDRAINAGE
CROSS DRAINS

DATE:_____ EFFECTIVE: 07-01-2004 **M605.10E** 2/2