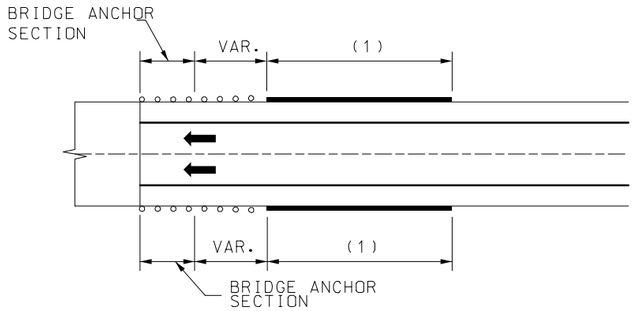

TWO-WAY PAVEMENT - USE GUARDRAIL AT ALL FOUR CORNERS.

AT BRIDGE ENDS

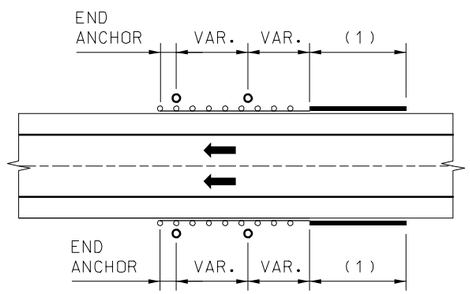

SHOULDER INSTALLATION WITH DIVIDED PAVEMENT

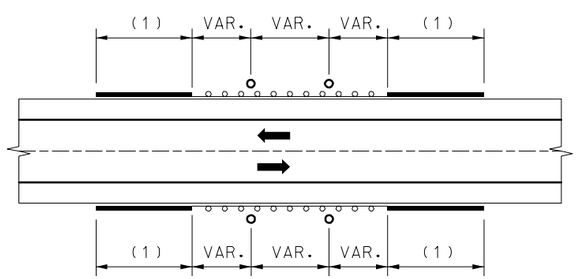

SHOULDER INSTALLATION WITH TWO-WAY PAVEMENT

AT OBSTACLES

FOR MULTIPLE OBSTACLES - SPECIFY VAR. IN 3810 mm INCREMENTS.

GUARDRAIL LOCATIONS

LEGEND

GUARDRAIL

OBSTACLE

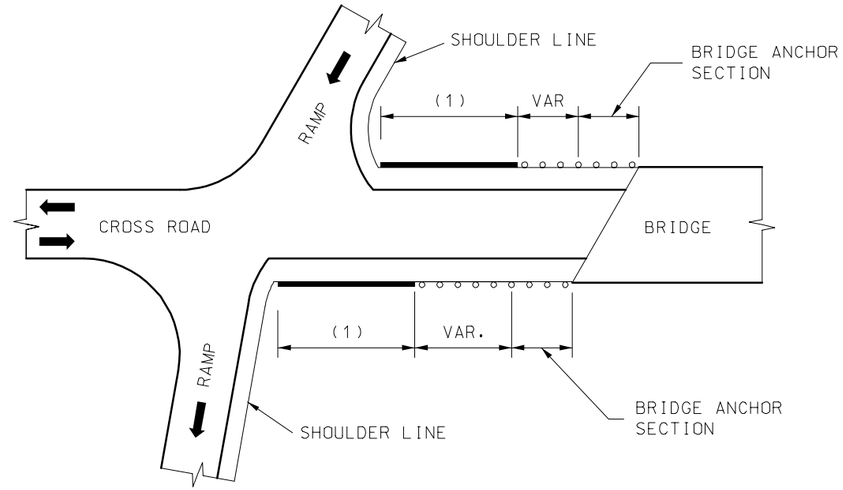

BRIDGE ENDS

GUARDRAIL LOCATION AT INTERCHANGE

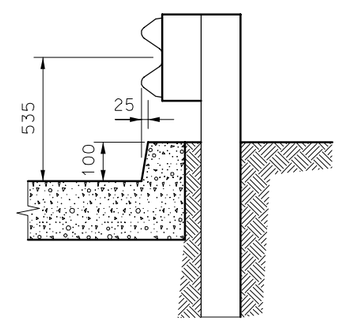

GUARDRAIL AT CURBS (3)

(1) APPROVED TYPE A CRASHWORTHY END TERMINAL.
(2) SHOULDER WIDENING SHALL CONSIST OF EMBANKMENT MATERIAL COMPACTED IN ACCORDANCE WITH SECTION 203.4 OF THE STANDARD SPECIFICATIONS.
(3) WHEN GUARDRAIL IS CONSTRUCTED OVER CURBS, THE CURBS SHALL BE CONSTRUCTED AS SHOWN.

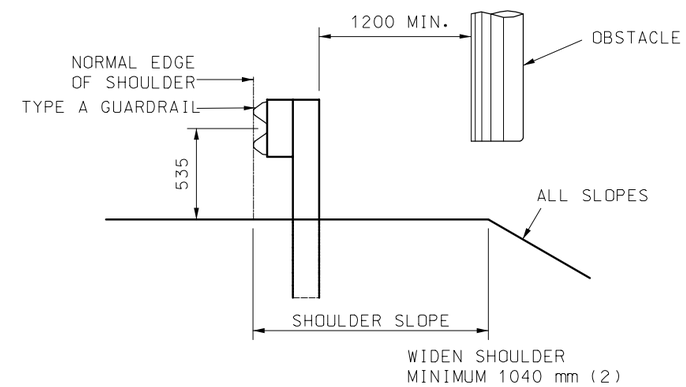

LOCATION OTHER THAN ℄ MEDIAN

LATERAL PLACEMENT OF GUARDRAIL
FOR SHOULDER INSTALLATION

GENERAL NOTE:

ALL DIMENSIONS SHOWN ARE IN mm UNLESS OTHERWISE NOTED.

MISSOURI HIGHWAYS AND TRANSPORTATION COMMISSION			
	GUARDRAIL		
DATE:_____	EFFECTIVE: 07-01-2004	M606.00AQ	1/16

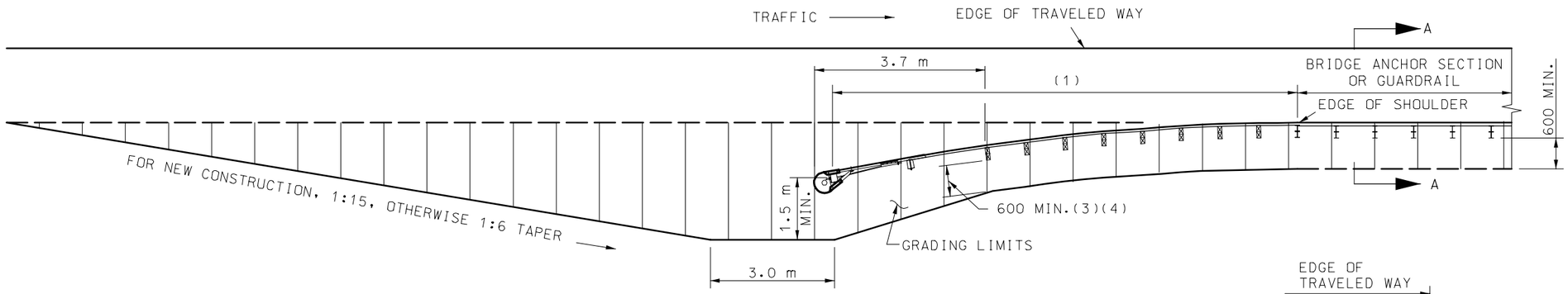

GRADING LIMITS FOR TYPE A FLARED CRASHWORTHY END TERMINAL

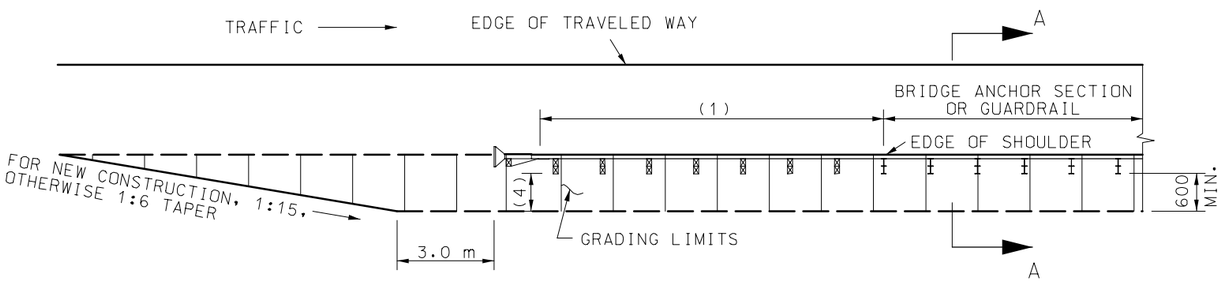

GRADING LIMITS FOR TYPE A NON-FLARED CRASHWORTHY END TERMINAL

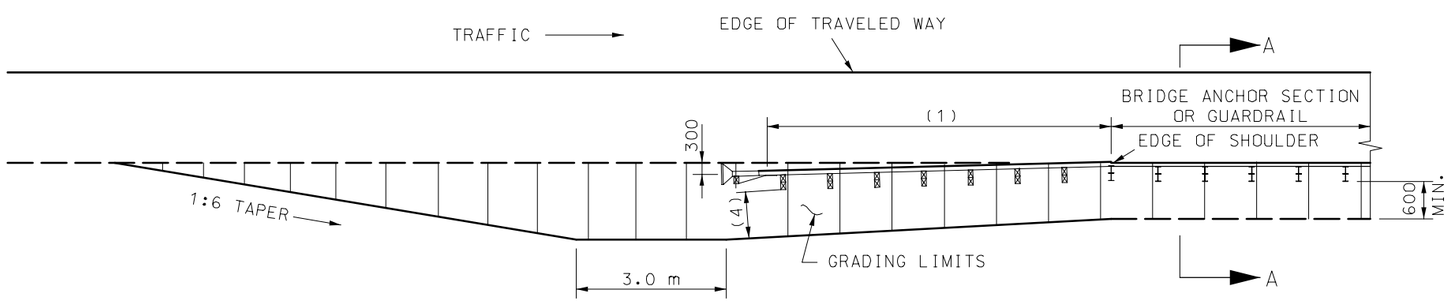

GRADING LIMITS FOR TYPE A NON-FLARED OFFSET CRASHWORTHY END TERMINAL

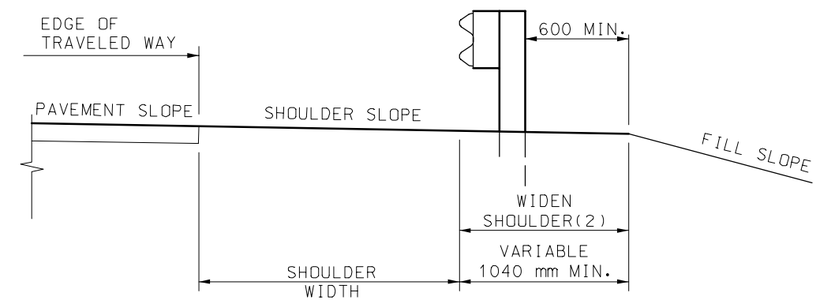

SECTION A-A

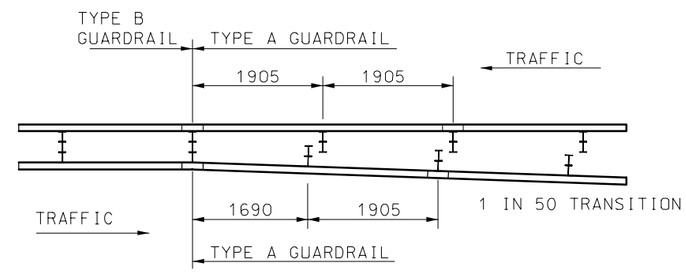

DETAIL FOR TRANSITIONING BETWEEN TYPE A AND TYPE B GUARDRAIL

GENERAL NOTES:

ALL DIMENSIONS ARE SHOWN IN mm UNLESS OTHERWISE NOTED.

THE CONTRACTOR SHALL PROVIDE THE ENGINEER WITH APPROVED SHOP DRAWINGS OF THE APPROVED CRASH-WORTHY END TERMINAL.

END ANCHORS SHALL BE INSTALLED ON ENDS OF GUARDRAIL RUNS WHERE CRASHWORTHY END TERMINAL IS NOT REQUIRED.

(1) APPROVED TYPE A CRASHWORTHY END TERMINAL.
(2) SHOULDER WIDENING SHALL CONSIST OF EMBANKMENT MATERIAL COMPACTED IN ACCORDANCE WITH SECTION 203.4 OF THE STANDARD SPECIFICATIONS.
(3) THE SLOPE SHOULD BREAK BEHIND THIRD POST.
(4) AS PER MANUFACTURER'S SPECIFICATIONS, 600 mm MINIMUM. NO DIRECT PAY.

MISSOURI HIGHWAYS AND TRANSPORTATION COMMISSION

GUARDRAIL

DATE:_____ EFFECTIVE: 07-01-2004 **M606.00AQ** 2/16

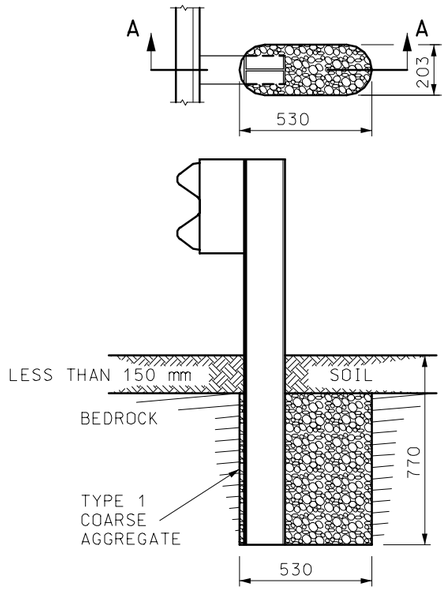

SECTION A-A
ROCK ENCOUNTERED
UP TO 150 mm BENEATH SURFACE

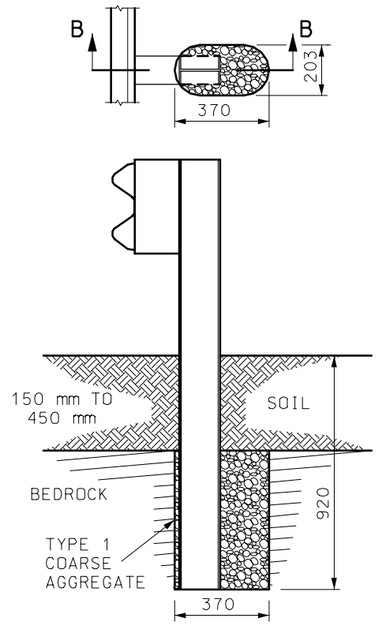

SECTION B-B
ROCK ENCOUNTERED
150 mm TO 450 mm BENEATH SURFACE

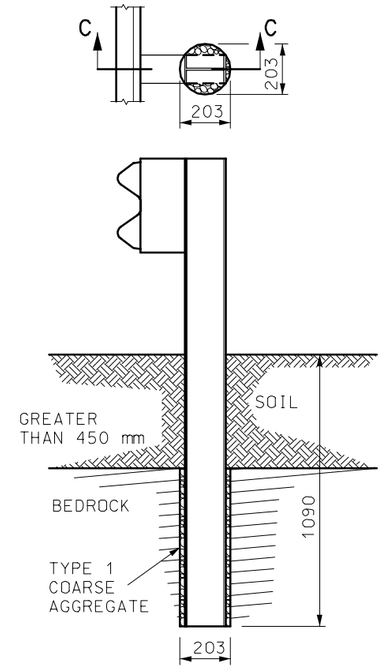

SECTION C-C
ROCK ENCOUNTERED MORE
THAN 450 mm BENEATH SURFACE

SETTING POST IN SOLID ROCK

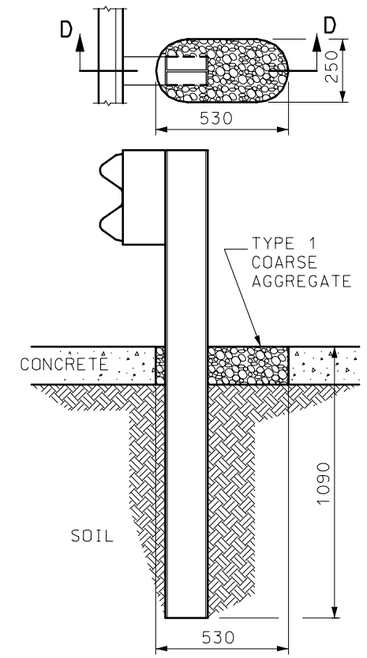

SECTION D-D

SETTING POST THROUGH CONCRETE

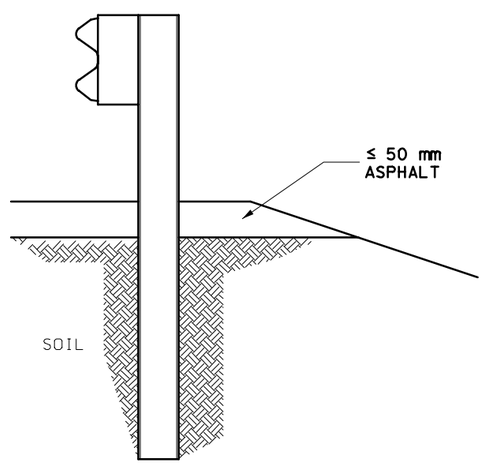

SETTING POST THROUGH ASPHALT

GENERAL NOTES:

ALL DIMENSIONS SHOWN ARE IN mm UNLESS OTHERWISE NOTED.

CONCRETE WHERE REQUIRED SHALL BE CLASS B OR OF A COMMERCIAL MIXTURE MEETING THE REQUIREMENTS OF THE STANDARD SPECIFICATIONS. NO DIRECT PAYMMENT WILL BE MADE FOR THIS CONCRETE OR ANY ADDITIONAL WORK INVOLVED.

HOLES IN SOLID ROCK SHALL PROVIDE A DIAMETER OF NOT LESS THAN 100 mm GREATER THAN THE MAXIMUM TRANSVERSE DIMENSION OF THE POST SECTION.

POST MAY BE SHORTER WHERE PLACED IN 600 mm OF SOLID ROCK. STEEL POSTS MAY BE FLAME OR SAW CUT. REPAIR OF CUT SHALL BE IN ACCORDANCE WITH SECTION 712 OF THE STANDARD SPECIFICATIONS.

MISSOURI HIGHWAYS AND TRANSPORTATION COMMISSION

GUARDRAIL

SETTING POST IN SOLID ROCK AND THROUGH CONCRETE OR ASPHALT

DATE:_____ EFFECTIVE: 07-01-2004 **M606.00AQ** 3/16

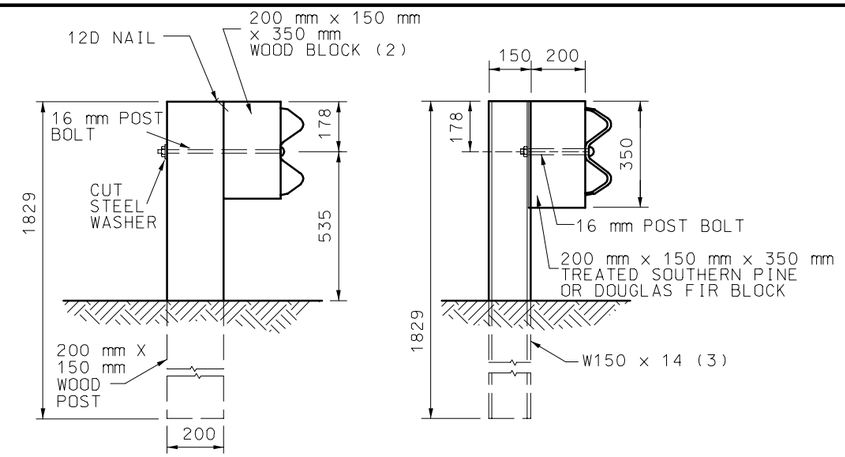

WOOD POST AND
WOOD OR PLASTIC BLOCK

STEEL POST AND
WOOD OR PLASTIC BLOCK

TYPE A AND D GUARDRAIL

(1) END TREATMENT AS SPECIFIED ON PLANS.
(2) AN ALTERNATE DESIGN, A 200 mm X 100 mm X 350 mm WOOD BLOCK, MAY BE USED.
(3) THE CONTRACTOR MAY FURNISH EQUIVALENT SECTIONS FABRICATED FROM MATERIAL MEETING AND IN ACCORDANCE WITH SECTION 1040.

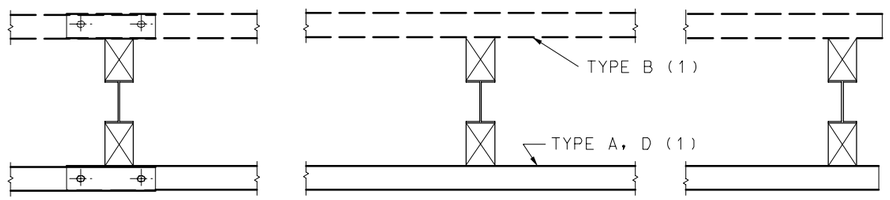

PLAN

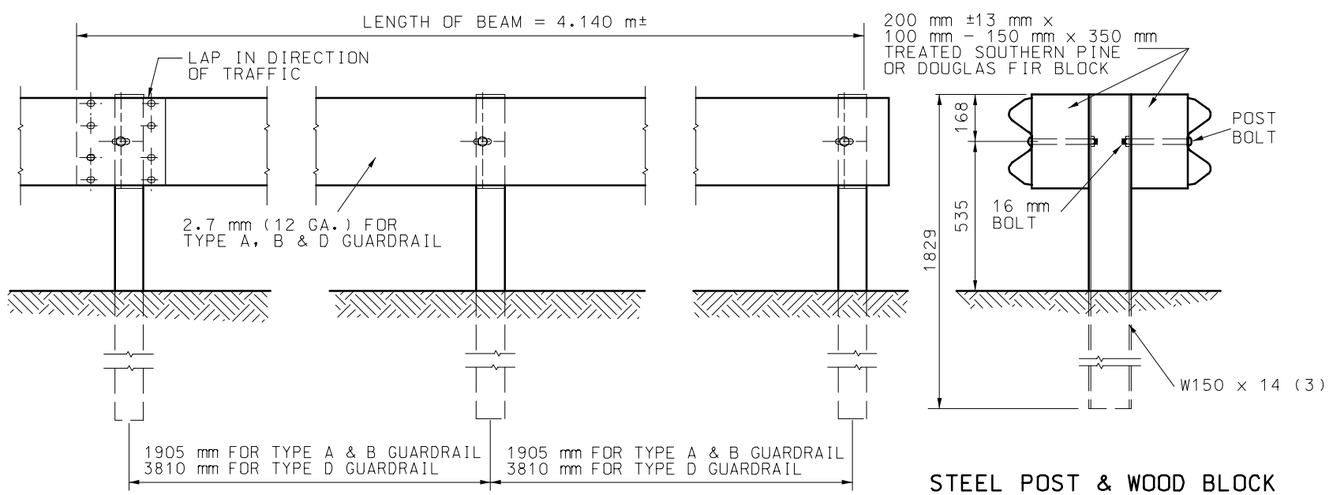

ELEVATION

STEEL POST & WOOD BLOCK

NOTE:
FOR TYPE E GUARDRAIL AND TRANSITION DETAILS SEE SHEET 7 OF 15.

TYPE B GUARDRAIL

GENERAL NOTES:

ALL DIMENSIONS SHOWN ARE IN mm UNLESS OTHERWISE NOTED.

WASHERS SHALL BE OMITTED ON ALL CONNECTIONS ON TYPE A, B AND D GUARDRAIL.

ALL DIMENSIONS ARE SUBJECT TO MANUFACTURING TOLERANCES EXCEPT WHERE ALLOWABLE TOLERANCES ARE SHOWN.

MISSOURI HIGHWAYS AND TRANSPORTATION COMMISSION

GUARDRAIL
TYPES A, B & D

DATE:_____ EFFECTIVE: 07-01-2004 **M606.00AQ** 4/16

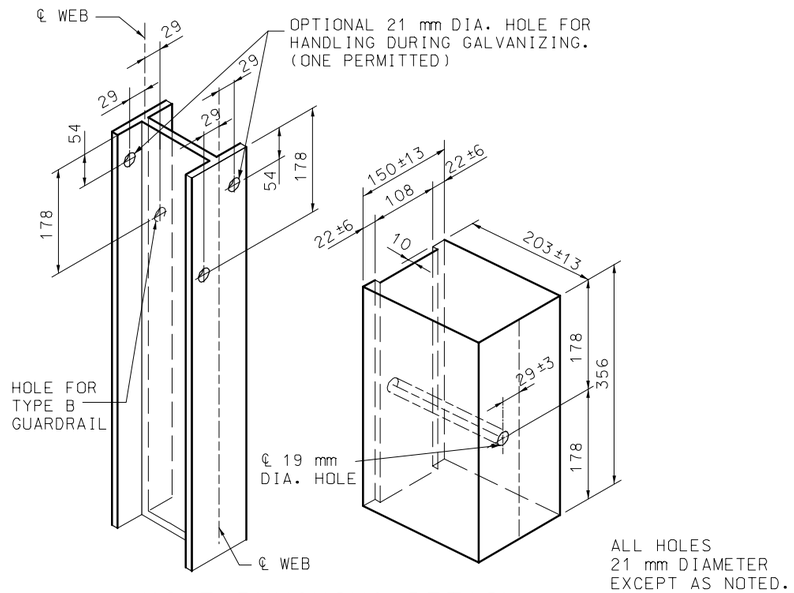

HOLE PUNCHING DETAIL
FOR STEEL POST & WOOD OR PLASTIC BLOCKS (1)

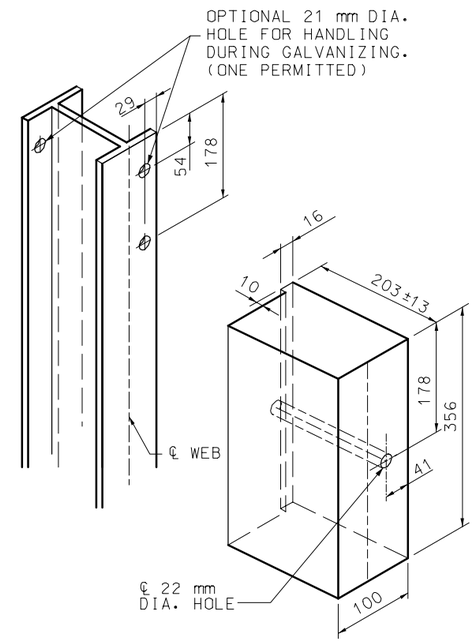

ALTERNATE DESIGN FOR WOOD BLOCK

(1) THE OVERALL NOMINAL DIMENSIONS SHOWN SHALL BE MET, ALTHOUGH THE SHAPE OF THE PLASTIC BLOCKS MAY VARY FROM THE SHAPE SHOWN, EXCEPT THE 22 mm ±6 mm FLANGE AND THE OVERALL WIDTH DIMENSIONS MAY BE WAIVED IF APPROVED BY PROJECT OPERATIONS.

GENERAL NOTE:

ALL DIMENSIONS SHOWN ARE IN mm UNLESS OTHERWISE NOTED.

MISSOURI HIGHWAYS AND TRANSPORTATION COMMISSION

GUARDRAIL

DATE:_____ EFFECTIVE: 07-01-2004 **M606.00AQ** 5/16

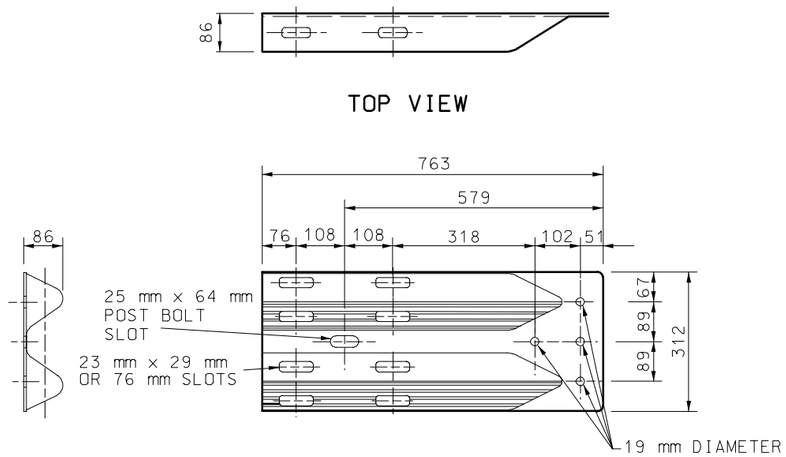

TERMINAL CONNECTOR

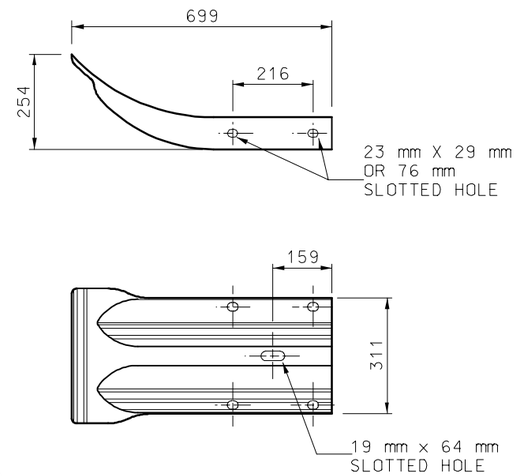

END SECTION
2.7 mm (12 GA.)

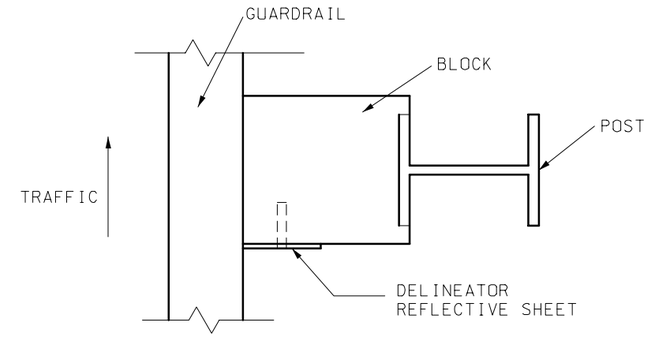

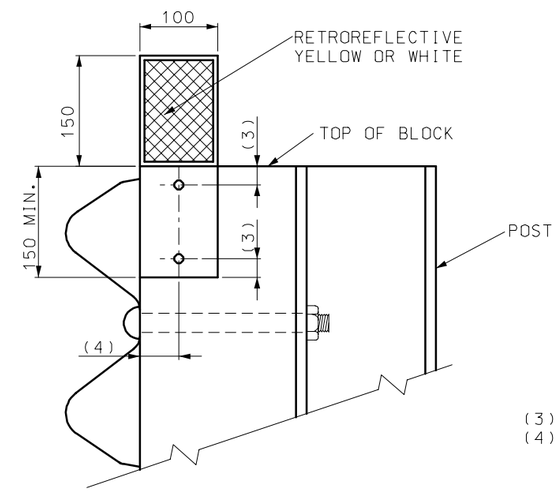

(3) APPROX. 37 mm
(4) APPROX. 50 mm

DELINEATORS SHALL BE AFFIXED WITH 50 mm (MIN.) LONG X 6 mm DIAMETER BOLTS OR SCREWS. THE DIAMETER OF THE BOLT'S OR SCREW'S HEAD SHALL BE TWICE THE DIAMETER OF THE HOLE, WITH A MINIMUM OF 12 mm. WASHERS SHALL BE USED WITH THE BOLTS AND SHALL HAVE 12 mm DIAMETER HOLES.

DELINEATORS ON NEW GUARDRAIL

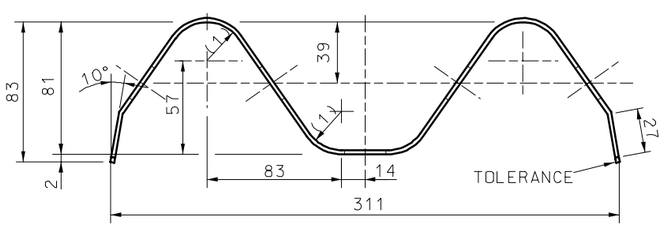

SECTION THRU BEAM

(1) 24 mm RADIUS
(2) 51 mm (TOLERANCE +32 mm, -6 mm)

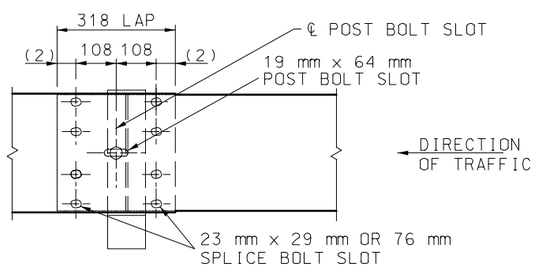

BEAM SPLICE AT POST
TYPE A, B AND D GUARDRAIL

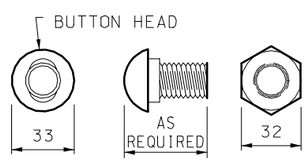

OVAL SHOULDER SHALL BE OF ADEQUATE HEIGHT, LENGTH & SHAPE TO PREVENT TURNING DURING INSTALLATION OR REMOVAL OF BOLT.

16 mm POST OR SPLICE BOLT

NOTE: PORTIONS OF BEAM WITH UNUSED BOLT SLOTS TO BE LAPPED BEHIND.

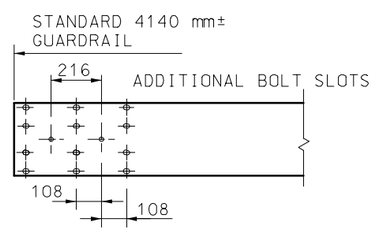

BEAM DETAILS SHOWING LOCATION OF ADDITIONAL BOLT SLOTS NECESSARY TO OBTAIN GUARDRAIL OFFSET.

GENERAL NOTE:

ALL DIMENSIONS SHOWN ARE IN mm UNLESS OTHERWISE NOTED.

MISSOURI HIGHWAYS AND TRANSPORTATION COMMISSION

GUARDRAIL

DATE:_____ EFFECTIVE:07-01-2004 **M606.00AQ** 6/16

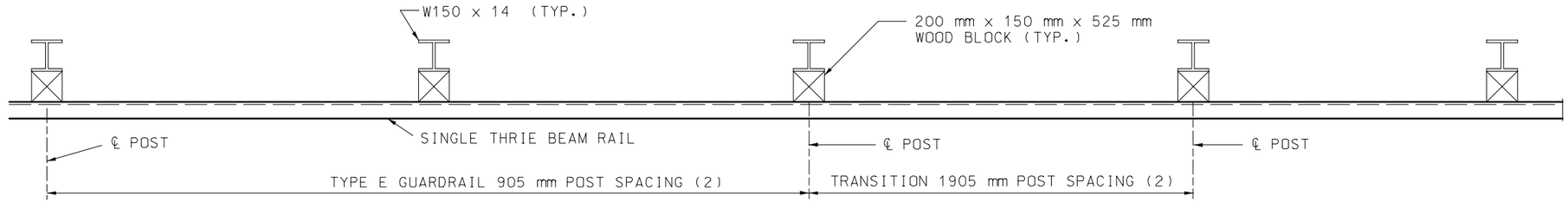

PLAN

(1) THE CONTRACTOR MAY FURNISH EQUIVALENT SECTIONS FABRICATED FROM MATERIAL MEETING AND IN ACCORDANCE WITH THE REQUIREMENTS OF ASTM, A769 GRADE 36 (250 MPa) OR 40 (275 MPa).

(2) IF THE TRANSITION IS CONNECTED TO A BRIDGE ANCHOR SECTION, POST SPACING FOR TYPE E GUARDRAIL AND THE TRANSITION SECTION SHALL BE 952.5 mm. FOR ALL OTHER CASES, POST SPACING SHALL BE 1905 mm.

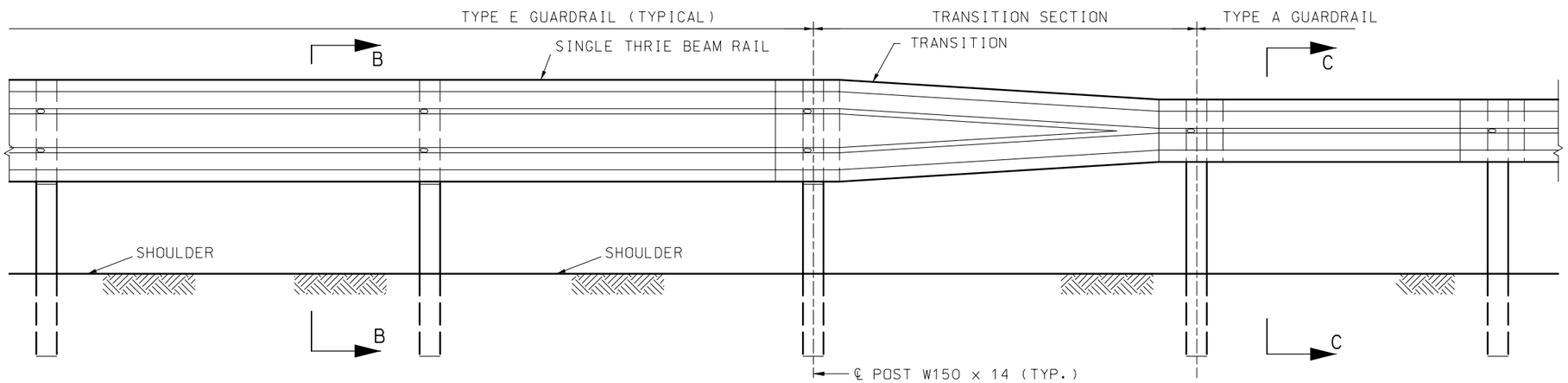

PART SECTION SHOWING TYPE E TO TYPE A GUARDRAIL TRANSITION

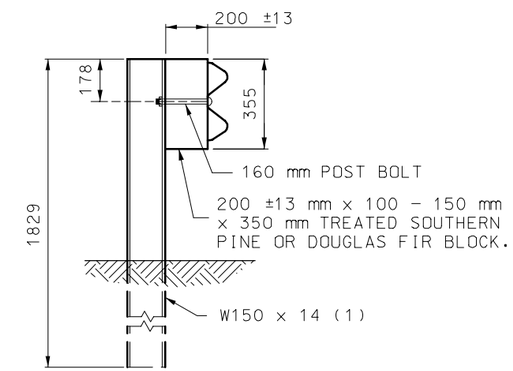

SECTION C-C
FOR WOOD BLOCKS

THE OVERALL NOMINAL DIMENSIONS SHOWN SHALL BE MET, ALTHOUGH THE SHAPE OF THE PLASTIC BLOCKS MAY VARY FROM THE SHAPE SHOWN, EXCEPT THE 22 mm ±6 mm FLANGE AND THE OVERALL WIDTH DIMENSIONS MAY BE WAIVED IF APPROVED BY PROJECT OPERATIONS.

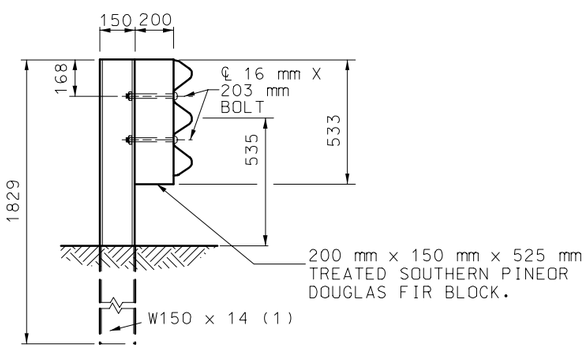

SECTION B-B
FOR WOOD BLOCKS

NOTE: BLOCKS SHALL BE THE SAME TYPE THROUGHOUT THE PROJECT LIMITS.

ALL HOLES 21 mm DIAMETER EXCEPT AS NOTED

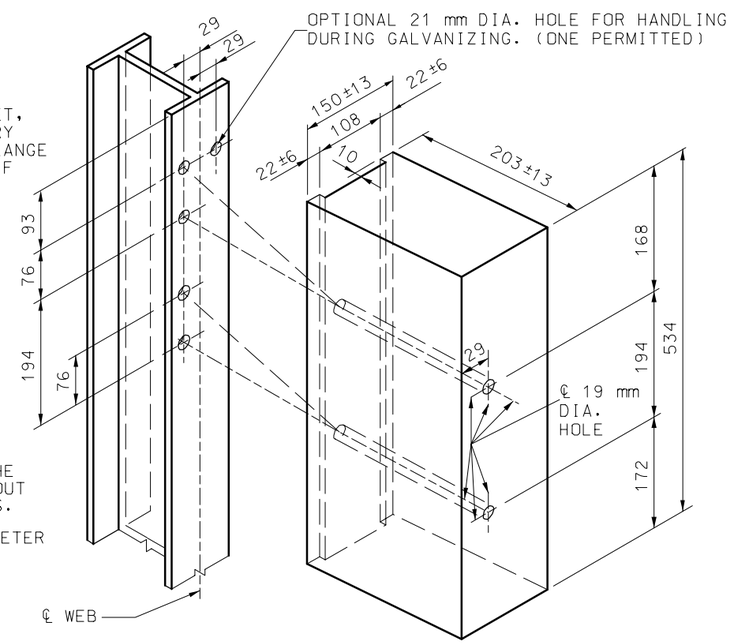

HOLE PUNCHING DETAIL
FOR STEEL POST & WOOD OR PLASTIC BLOCKS

GENERAL NOTES:

ALL DIMENSIONS ARE SHOWN IN mm UNLESS OTHERWISE NOTED.

TYPE E GUARDRAIL SHALL USE 1905 mm POST SPACING UNLESS 952.5 mm POST IS SPECIFIED.

THE THRIE BEAM RAIL FOR THE TYPE E GUARDRAIL AND THE TRANSITION SECTION SHALL BE MADE OF STEEL AND SHALL BE 2.7 mm (12 GA.).

FOR PROTECTIVE COATING AND MATERAL REQUIREMENTS, SEE SECTION 1040 OF THE STANDARD SPECIFICATIONS.

SEE SHEET 3 OF 14 FOR REQUIREMENTS FOR SETTING POSTS AT OBSTRUCTIONS.

ALL DIMENSIONS ARE SUBJECT TO MANUFACTURING TOLERANCES EXCEPT WHERE ALLOWABLE TOLERANCES ARE SHOWN.

FOR DETAILS NOT SHOWN, SEE OTHER SHEETS OF THIS DRAWING.

MISSOURI HIGHWAYS AND TRANSPORTATION COMMISSION

GUARDRAIL
TYPE E

DATE:_____ EFFECTIVE: 07-01-2004 **M606.00AQ** 7/16

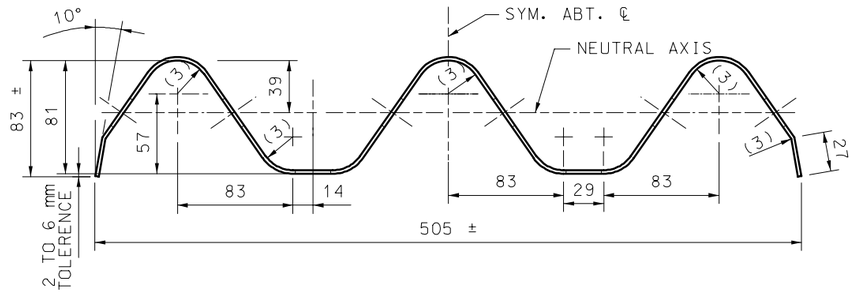

SECTION THRU THRIE BEAM RAIL

(1) 50 mm (TOLERANCE +32 mm, -6 mm)
(2) SHOULDER WIDENING SHALL COMSIST OF EMBANKMENT MATERIAL COMPACTED IN ACCORDANCE WITH SECTION 203.4 STANDAND SPECIFICATION.
(3) 24 mm RADIUS

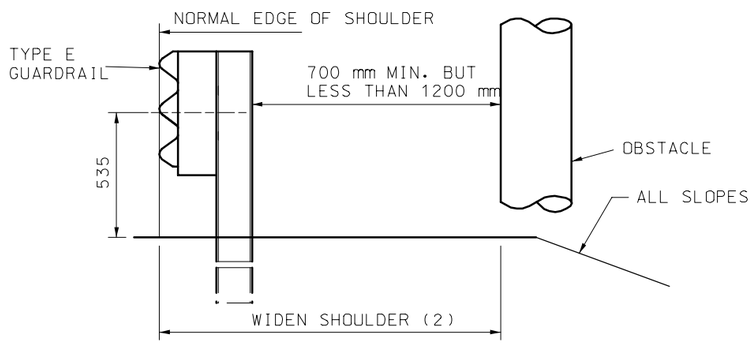

LATERAL PLACEMENT OF TYPE E GUARDRAIL

SHOULDER ENCOACHMENT WILL BE PERMITTED TO OBTAIN MINIMUM CLEARANCE AT EXISTING OBSTACLES. A 1:50 TAPER SHALL BE USED FROM THE NORMAL SHOULDER LINE LOCATION TO THE ENCROACHMENT LOCATION AND, IF GUARDRAIL IS CONTINOUS, BACK TO THE LOCATION.

USE 7620 mm OF TYPE E GUARDRAIL PRECEDING THE OBSTACLE, AND THROUGH THE LIMITS OF THE OBSTACLE WHEN THE ABOVE CONDITION EXISTS.

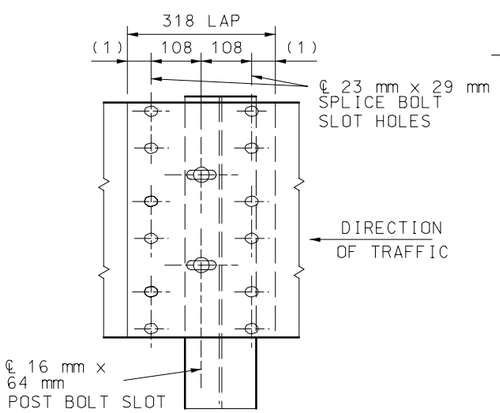

THRIE BEAM RAIL SPLICE AT POST

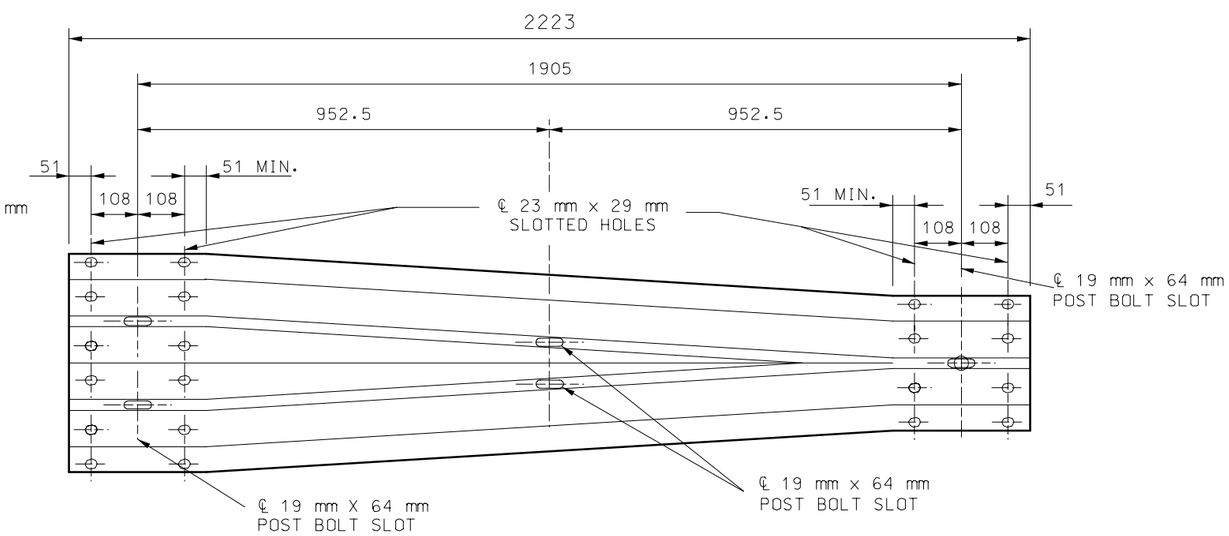

ELEVATION OF TRANSITION SECTION

GENERAL NOTE:

ALL DIMENSIONS SHOWN ARE IN mm UNLESS OTHERWISE NOTED.

MISSOURI HIGHWAYS AND TRANSPORTATION COMMISSION

GUARDRAIL
TYPE E

DATE:_____ EFFECTIVE: 07-01-2004 **M606.00AQ** 8/16

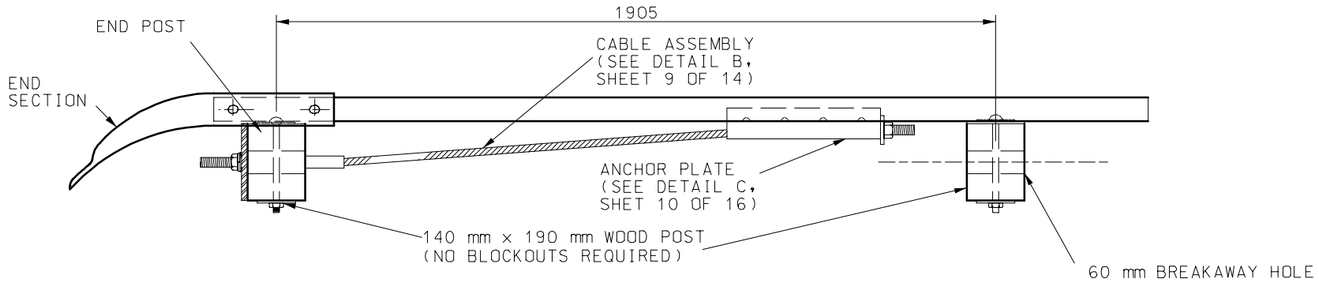

NOTE: SEE SHEET 6 OF 14 FOR DETAILS OF END SECTION.

PLAN

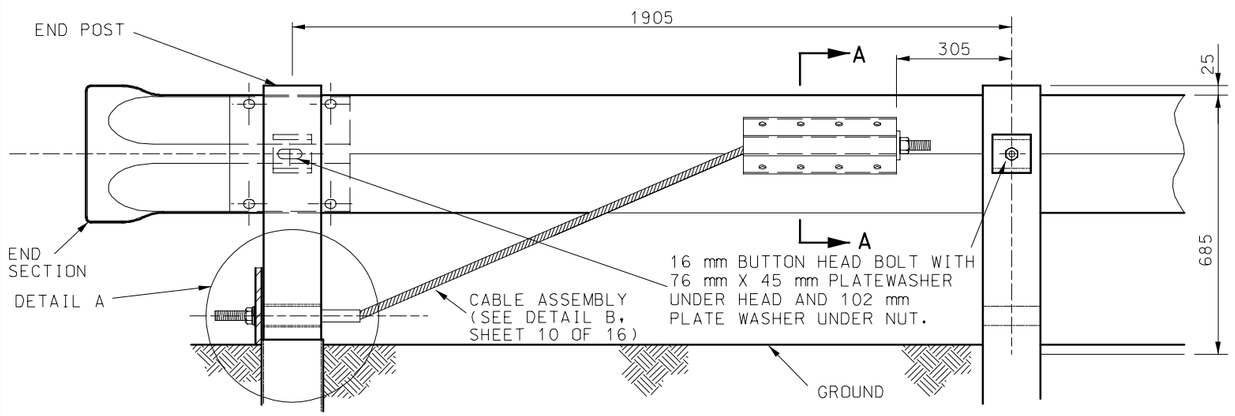

POST 1 ELEVATION (BACK SIDE) POST 2

END ANCHOR DETAILS

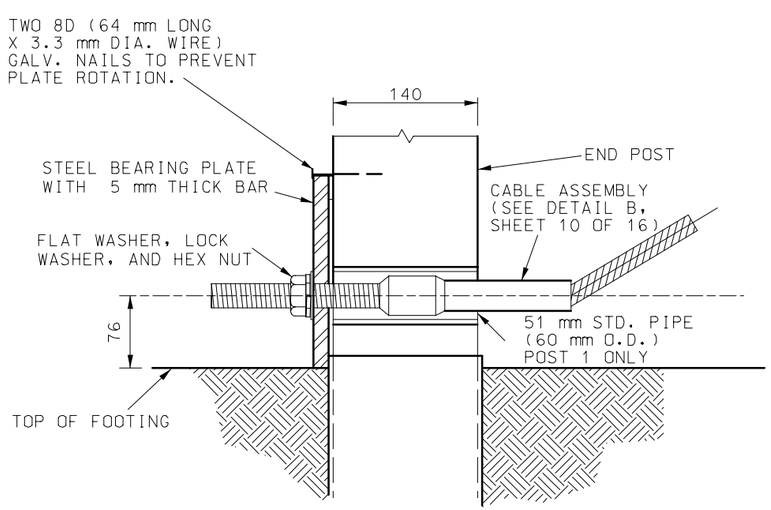

DETAIL A
(END POST DETAIL)

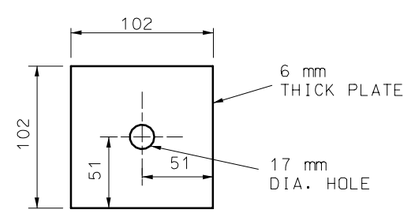

102 mm PLATE WASHER

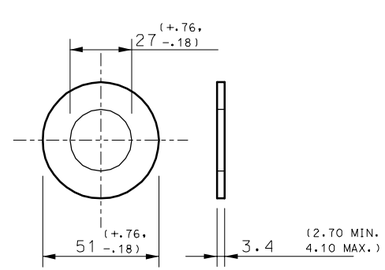

TYPE A WASHER

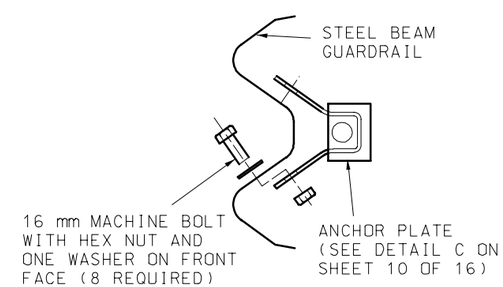

SECTION A-A

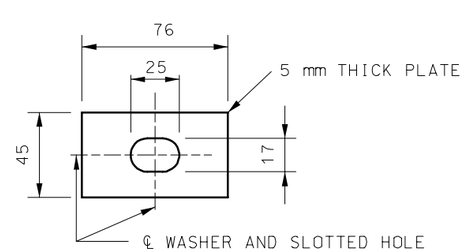

76 mm x 45 mm PLATE WASHER

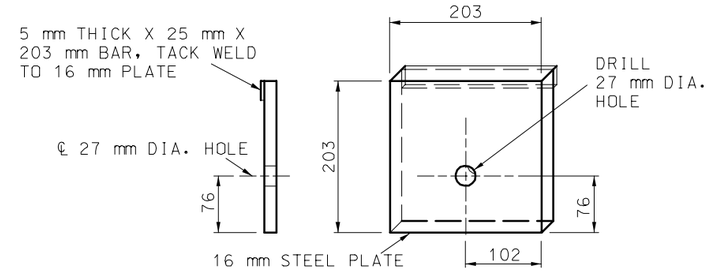

DETAIL OF STEEL BEARING PLATE

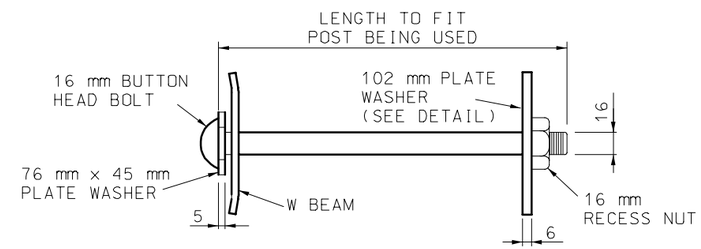

POST BOLT ASSEMBLY

GENERAL NOTES:

ALL DIMENSIONS SHOWN ARE IN mm UNLESS OTHERWISE NOTED.

END ANCHOR DETAILS SHOWN SHALL BE USED ONLY ON DOWN STREAM ENDS OF GUARDRAIL WHEN AN END ANCHOR IS REQUIRED.

THE DETAILS SHOWN ARE FOR AN END ANCHORAGE SYSTEM FOR GUARDRAIL. GUARDRAIL AND POSTS ARE PAID FOR SEPARATELY.

CABLE ASSEMBLY AND ANCHOR PLATE SHALL BE SUBJECT TO APPROVAL BY THE ENGINEER AND SHALL HAVE A MINIMUM BREAKING STRENGTH OF 178 Kn.

ALL FITTINGS AND HARDWARE REQUIRED SHALL BE GALVANIZED AFTER FABRICATION, SEE SECTION 1040 STANDARD SPECIFICATION.

WOOD POSTS 1 AND 2 SHALL BE 140 mm X 190 mm.

SEE SECTION 1050 STANDARD SPECIFICATIONS FOR WOOD POST.

MISSOURI HIGHWAYS AND TRANSPORTATION COMMISSION

GUARDRAIL
END ANCHOR DETAILS

DATE:_____ EFFECTIVE: 07-01-2004 **M606.00AQ** 9/16

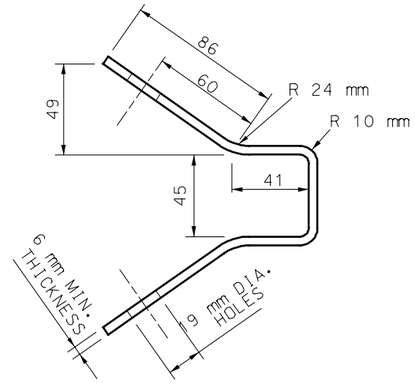

FABRICATION DETAIL

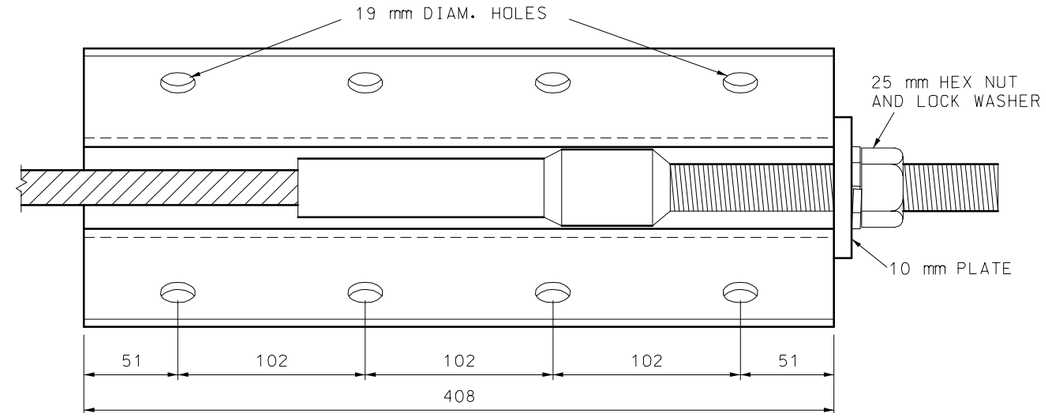

DETAIL C
ASSEMBLED VIEW
(ANCHOR PLATE)

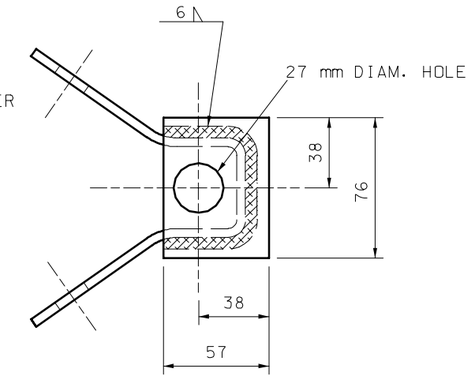

END VIEW

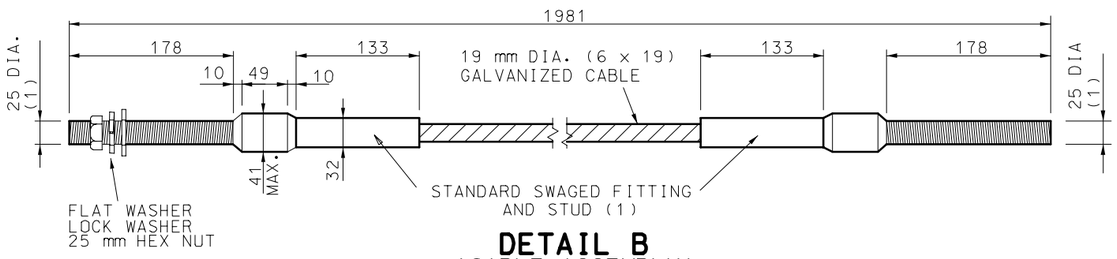

DETAIL B
(CABLE ASSEMBLY)

(1) STUD, THREADED ENTIRE LENGTH.
(2) 1905 mm SPACING FOR TYPE A OR B GUARDRAIL; 952.5 mm SPACING FOR TYPE E GUARDRAIL.
(3) 600 mm MINIMUM BUT LESS THAN 1200 mm FOR TYPE E GUARDRAIL; 1200 mm MINIMUM FOR TYPE A GUARDRAIL.

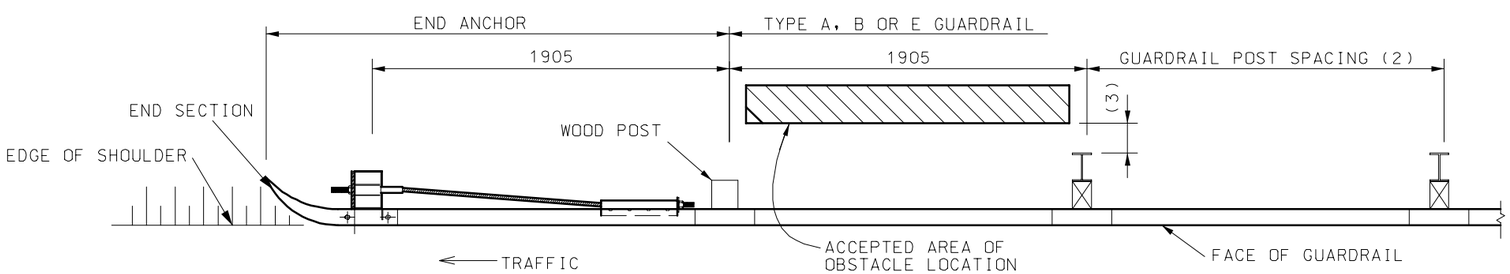

PLAN

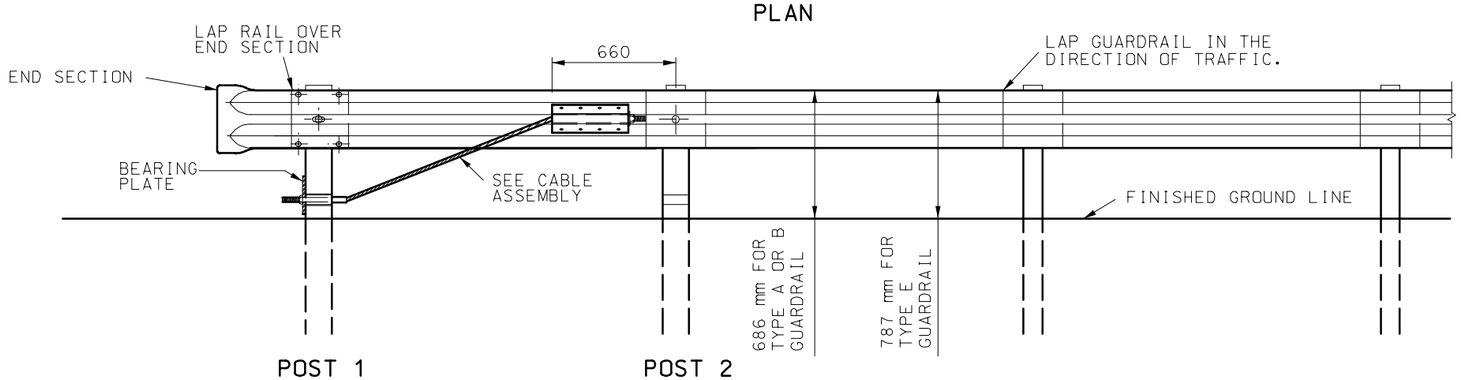

ELEVATION
END ANCHOR

GENERAL NOTE:

ALL DIMENSIONS SHOWN ARE IN mm UNLESS OTHERWISE NOTED.

MISSOURI HIGHWAYS AND TRANSPORTATION COMMISSION

GUARDRAIL
END ANCHOR DETAILS

DATE:_____ EFFECTIVE:07-01-2004 **M606.00AQ** 10/16

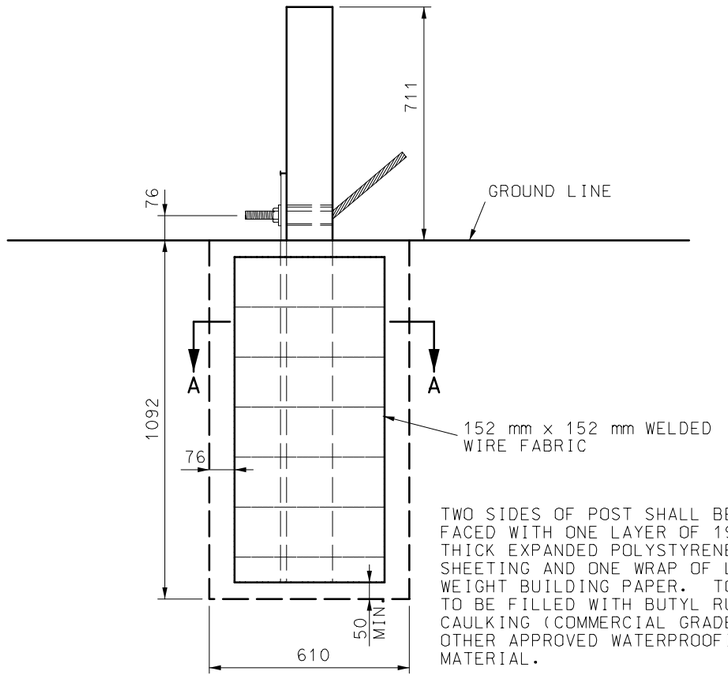

TWO SIDES OF POST SHALL BE FACED WITH ONE LAYER OF 19 mm. THICK EXPANDED POLYSTYRENE FOAM SHEETING AND ONE WRAP OF LIGHT-WEIGHT BUILDING PAPER. TOP 25 mm TO BE FILLED WITH BUTYL RUBBER CAULKING (COMMERCIAL GRADE) OR OTHER APPROVED WATERPROOFING MATERIAL.

POST 1

CONCRETE FOUNDATION FOR END ANCHORS

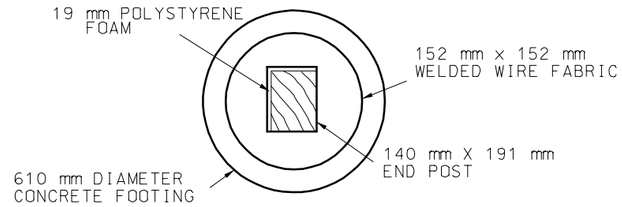

SECTION A-A
EXPANDED POLYSTYRENE FOAM INSTALLATION DETAIL

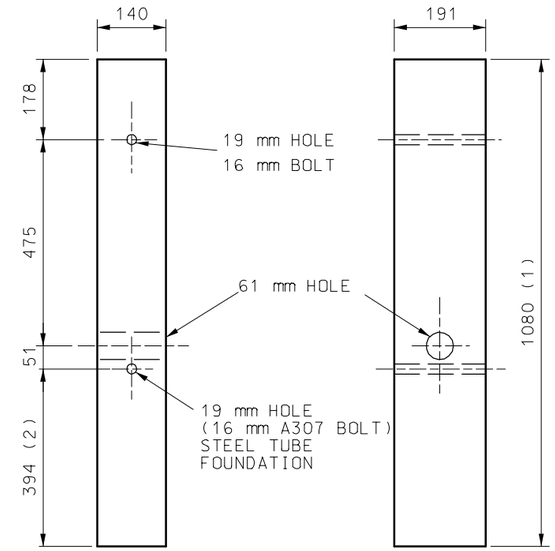

FRONT VIEW SIDE VIEW

WOOD BREAKAWAY POST

SEE SECTION 1050

(1) 1765 mm FOR CONCRETE FOUNDATION ALTERNATE.

(2) 1080 mm FOR CONCRETE FOUNDATION ALTERNATE.

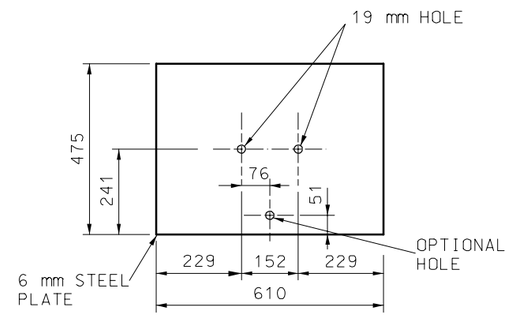

SOIL PLATE

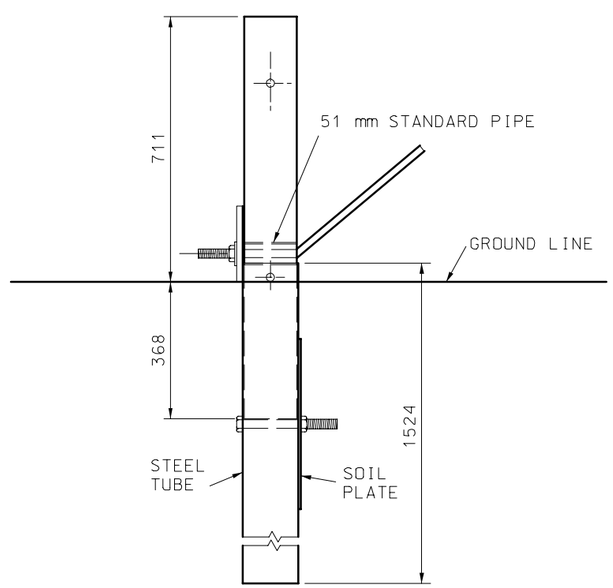

POST 1

STEEL TUBE FOUNDATION FOR END ANCHORS

BOLTS AND NUTS SHALL BE GALVANIZED IN ACCORDANCE WITH THE REQUIREMENTS OF AASHTO M232, OR THEY MAY BE MECHANICALLY GALVANIZED IN ACCORDANCE WITH AASHTO M232 CLASS C.

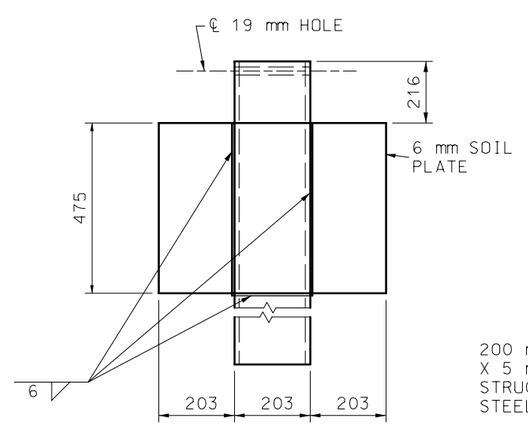

SHOP WELDED
SOIL PLATE CONNECTION

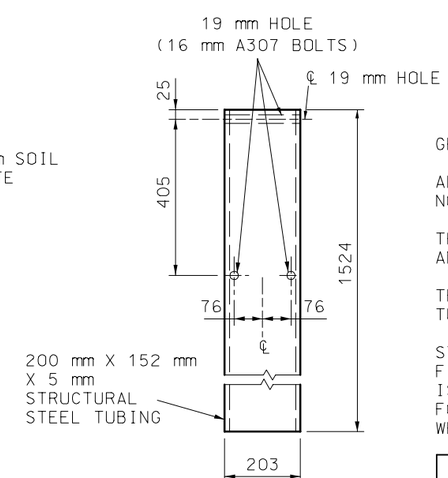

STEEL TUBE

GENERAL NOTES:

ALL DIMENSIONS SHOWN ARE IN mm UNLESS OTHERWISE NOTED.

THE CONTRACTOR HAS THE OPTION TO INSTALL WOOD POST 1 AND 2 IN STEEL TUBE OR CONCRETE FOUNDATION.

TRIMMING OF WOOD POST MAY BE NECESSARY FOR STEE TUBE FOUNDATION.

STEEL TUBE FOUNDATIONS SHALL BE DRILLED AND BACK-FILLED WITH A SUITABLE MATERIAL WHEN THE SOIL PLATE IS BOLTED, AS SHOWN, TO THE STEEL TUBE. STEEL TUBE FOUNDATION MAY BE DRIVEN WHEN THE SOIL PLATE IS WELDED, AS SHOWN, TO THE STEEL TUBE.

MISSOURI HIGHWAYS AND TRANSPORTATION COMMISSION

GUARDRAIL

DATE:_____ EFFECTIVE: 07-01-2004 M606.00AQ 11/16

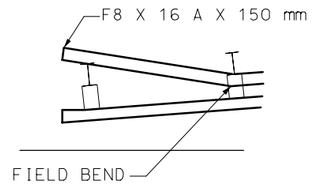

DETAIL A

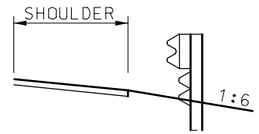

SECTION A-A

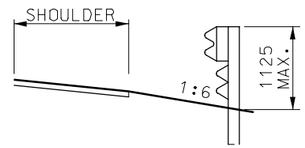

SECTION B-B
(WITH RUBRAIL)

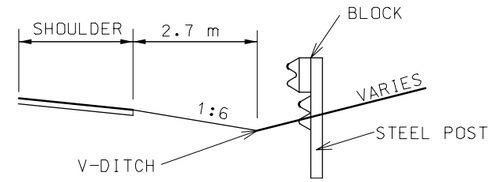

SECTION C-C
(WITH RUBRAIL)

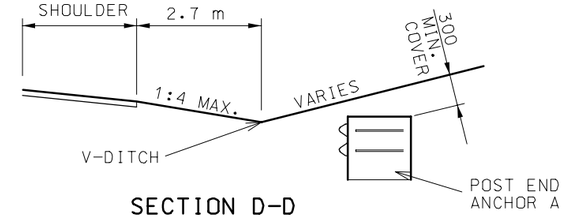

SECTION D-D

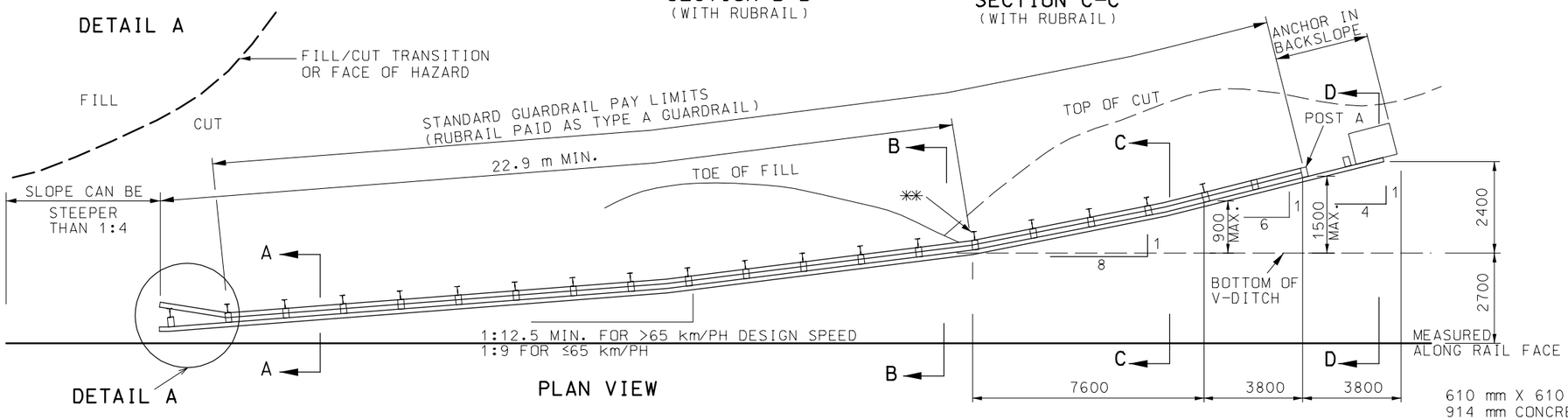

DETAIL A

PLAN VIEW

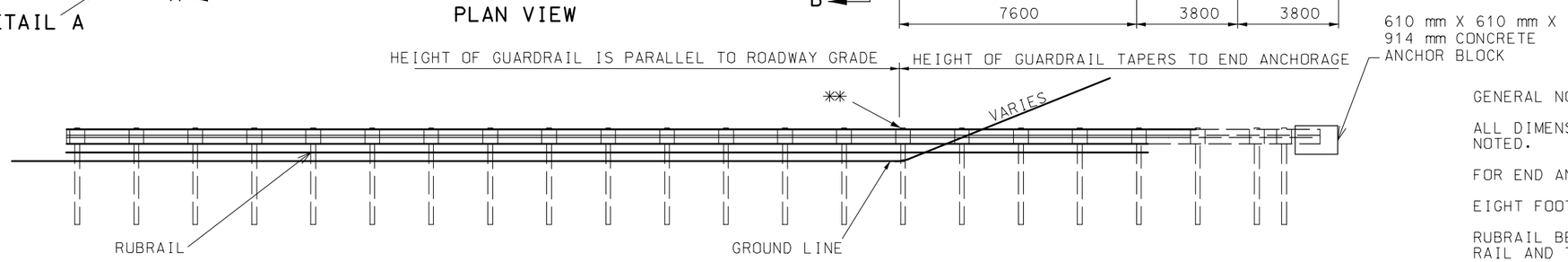

** THE POST BEHIND THE DITCHLINE MAY BE SHORTENED TO PROVIDE 1200 mm MIIN. EMBEDMENT.

ELEVATION

ANCHORED IN BACKSLOPE GUARDRAIL

COST OF SHAPING ROCK FACE FOR PLACING OF TERMINAL CONNECTOR, DRILLING HOLES, FURNISHING AND PLACING BOLTS, WASHERS, CAULKING, ANCHORS AND END SHOE TO BE INCLUDED IN THE PRICE OF GUARDRAIL ANCHOR, ROCK FACE.

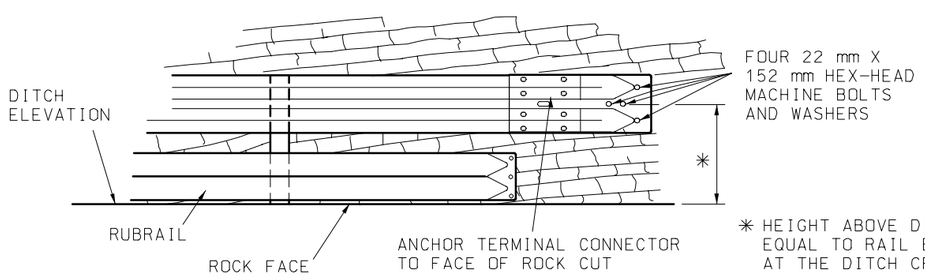

* HEIGHT ABOVE DITCH IS EQUAL TO RAIL ELEVATION AT THE DITCH CROSSING.

ROCK FACE GUARDRAIL ANCHOR

GENERAL NOTES:

ALL DIMENSIONS SHOWN ARE IN mm UNLESS OTHERWISE NOTED.

FOR END ANCHOR DETAILS, SEE SHEET 8 OF 14.

EIGHT FOOT POST IS REQUIRED WITH RUBRAIL.

RUBRAIL BEGINS WHEN THE DISTANCE BETWEEN THE GUARDRAIL AND THE GROUND IS 450 mm AND INCREASING.

END ANCHOR POSTS 1 AND 2 SHALL HAVE FOUNDATION TYPE AS SHOWN ON SHEET 8 OF 14.

THE CONTRACT UNIT PRICE FOR EMBEDDED GUARDRAIL ANCHOR SHALL INCLUDE THE CONCRETE ANCHOR. EXCAVATION AND BACKFILLING, OR TERMINAL CONNECTOR, AND ALL INCIDENTIAL HARDWARE AND WORK NECESSARY TO COMPLETE THE INSTALLATION.

THE GUARDRAIL SHALL EXTEND 15.2 m± BEYOND THE DITCH LINE AND TERMINATE A MINIMUM OF 300 mm BELOW GROUND ELEVATION OF THE BACKSLOPE.

BLOCKOUTS WILL NOT BE REQUIRED FOR ANY POST WHICH WILL BE COMPLETELY BELOW GROUND. THE ALIGNMENT OF SUCH POSTS SHALL BE APPROVED BY THE ENGINEER.

SEE OTHER DRAWINGS AND STANDARD SPECIFICATIONS FOR MATERIAL AND CONSTRUCTION REQUIREMENTS NOT SHOWN.

MISSOURI HIGHWAYS AND TRANSPORTATION COMMISSION

GUARDRAIL

ANCHOR IN BACKSLOPE WITH V-DITCH STEEPER THAN 1:10, 1:4 MAX. FORESLOPE

DATE:_____	EFFECTIVE: 07-01-2004	M606.00AQ	12/16

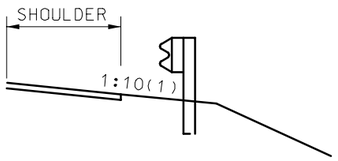

SECTION A-A

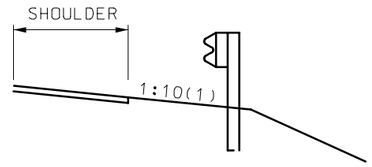

SECTION B-B

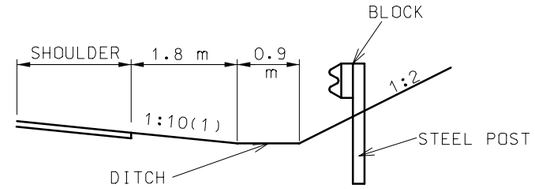

SECTION C-C

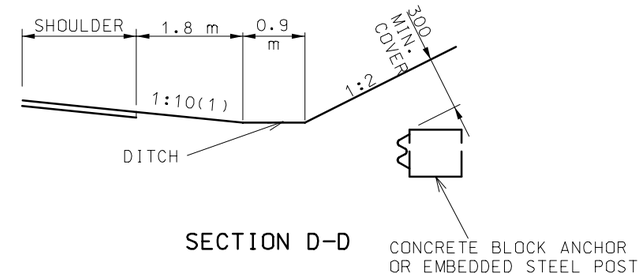

SECTION D-D

(1) MAX. CROSS SLOPE SHALL NOT EXCEED 1:6. RUBRAIL IS REQUIREDWHEN CROSS SLOPE EXCEEDS 1:10 OR WHEN THE DISTANCE BETWEENTHE GUARDRAIL AND THE GROUND IS 450 mm AND INCREASING.

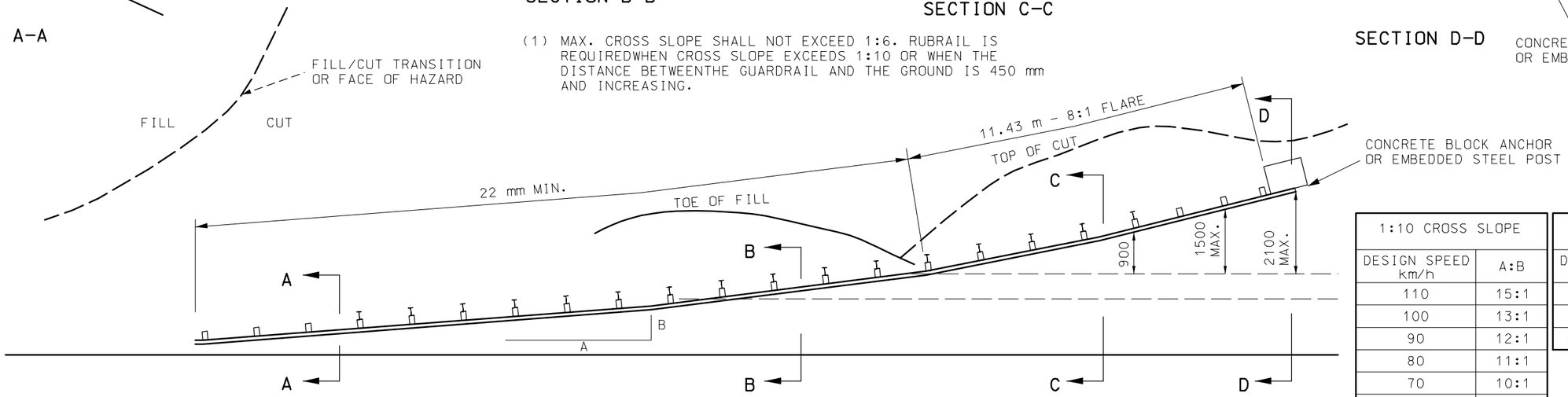

PLAN VIEW

1:10 CROSS SLOPE	
DESIGN SPEED km/h	A:B
110	15:1
100	13:1
90	12:1
80	11:1
70	10:1
60	9:1
50 OR LESS	7:1

STEEPER THAN 1:10 CROSS SLOPE (1)	
DESIGN SPEED km/h	A:B
110	12.5:1
60	9:1
50 OR LESS	7:1

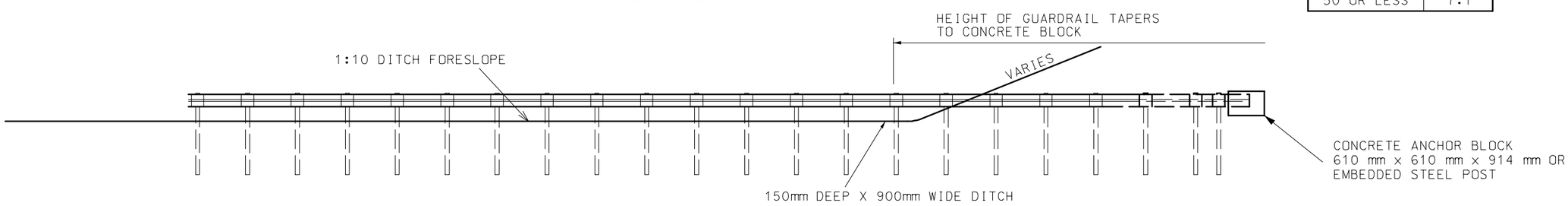

ELEVATION

ANCHORED IN BACKSLOPE GUARDRAIL

GENERAL NOTE:

ALL DIMENSIONS SHOWN ARE IN mm UNLESS OTHERWISE NOTED.

MISSOURI HIGHWAYS AND TRANSPORTATION COMMISSION

GUARDRAIL
ANCHOR IN BACKSLOPE
WITH FLAT DITCH

DATE:_____ EFFECTIVE: 07-01-2004 **M606.00AQ** 13/16

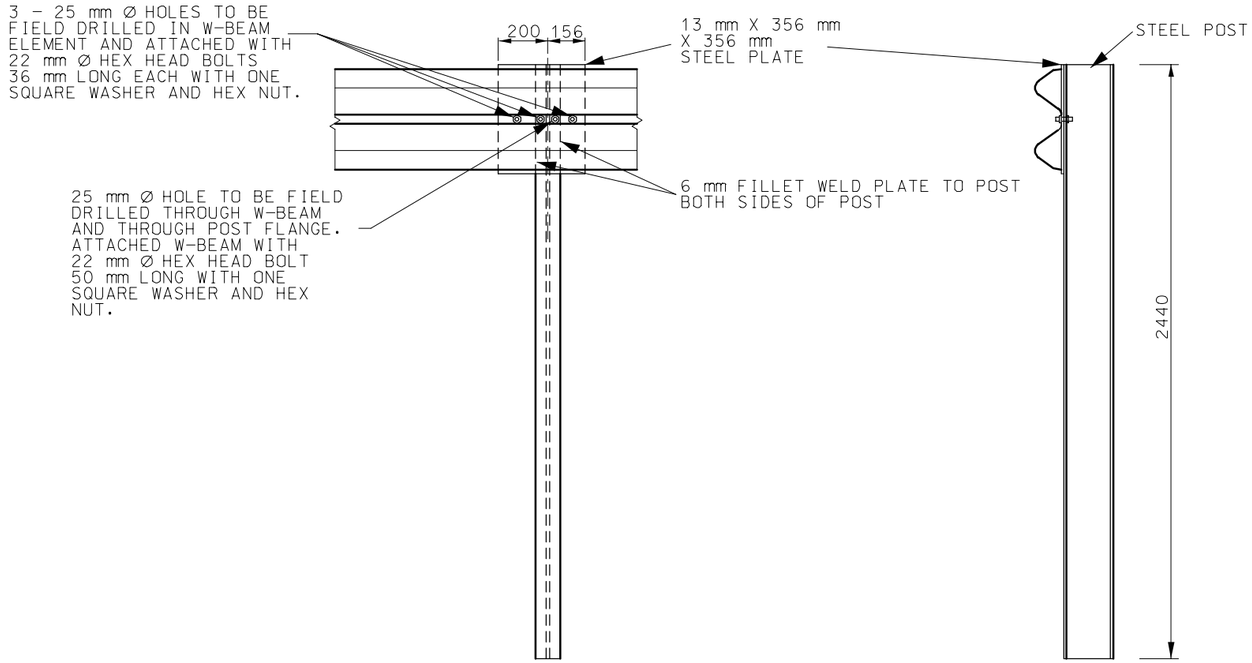

EMBEDDED STEEL POST

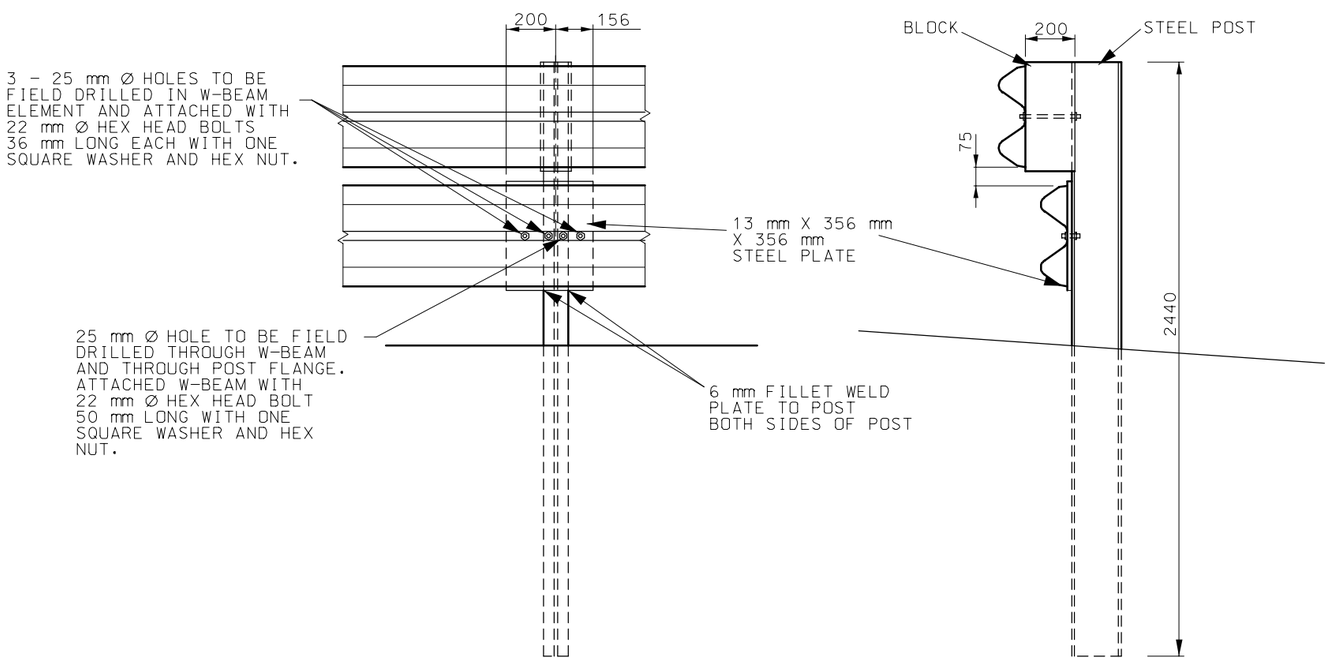

SPECIAL RUBRAIL TO POST CONNECTION AT POST A

GENERAL NOTE:

ALL DIMENSIONS SHOWN ARE IN mm UNLESS OTHERWISE NOTED.

MISSOURI HIGHWAYS AND TRANSPORTATION COMMISSION

GUARDRAIL
ANCHORED IN BACKSLOPE
END ANCHORAGE DETAILS
EMBEDDED STEEL POST OPTION

DATE:_____ EFFECTIVE: 07-01-2004 **M606.00AQ** 14/16

THREADED INSERTS FOR M24 X 50 GALVANIZED HEX HEAD CAP SCREWS. CAP SCREWS TO BE THREADED A MINIMUM 48 mm. INSERTS THREADED MINIMUM OF 45 mm.

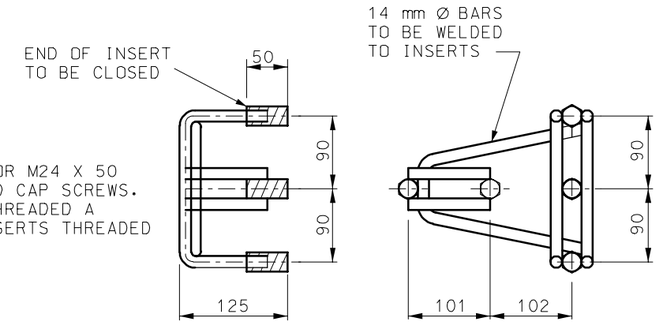

CONCRETE BLOCK ANCHOR
ANCHOR ASSEMBLY

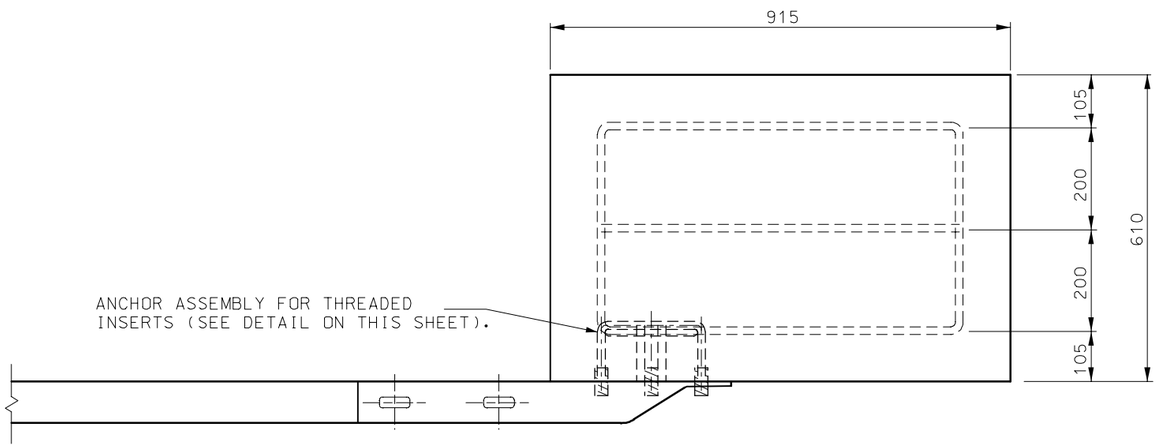

TOP VIEW

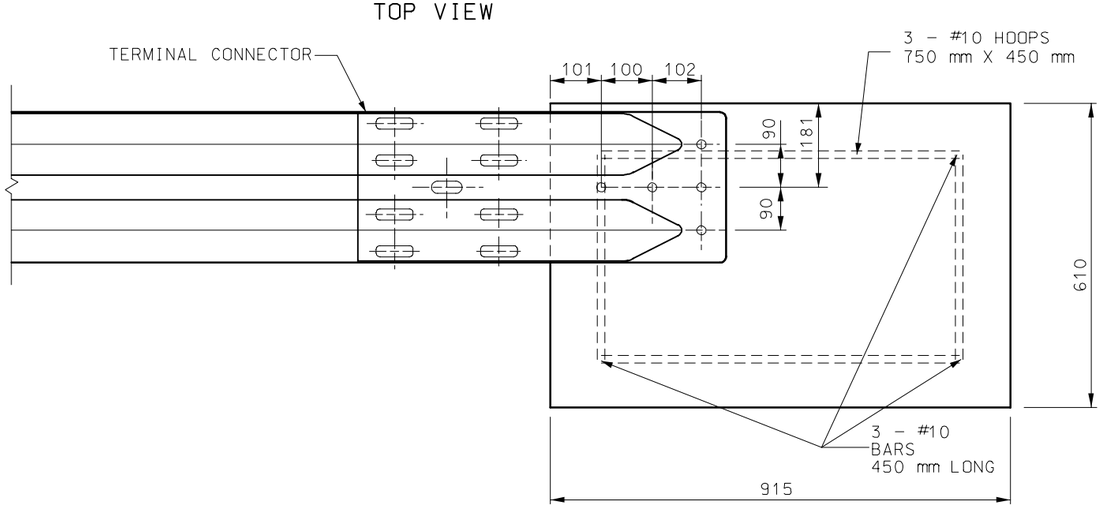

ELEVATION

CONCRETE BLOCK ANCHOR
(610 mm X 610 mm X 915 mm)

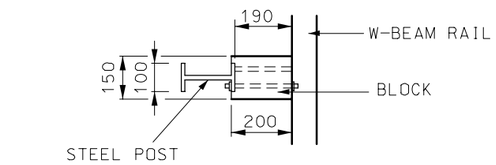

PLAN

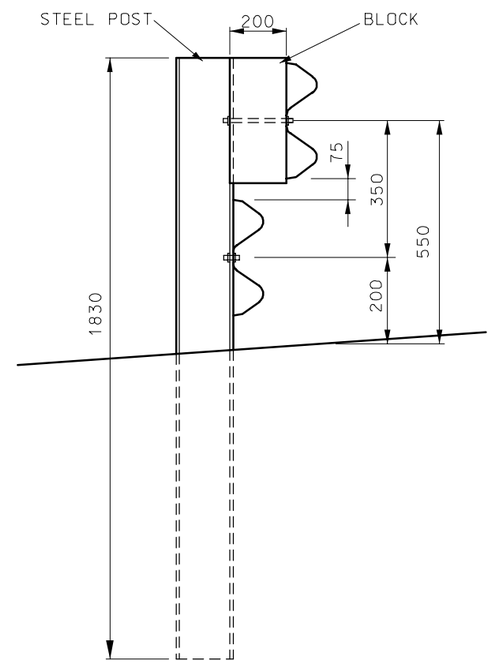

ELEVATION OF 1.8 m POST

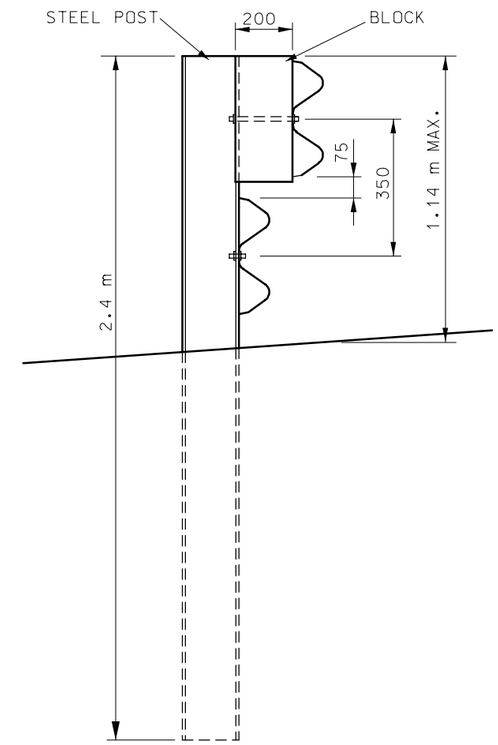

ELEVATION 2.4 m POST

STEEL POST AND BLOCK DETAIL

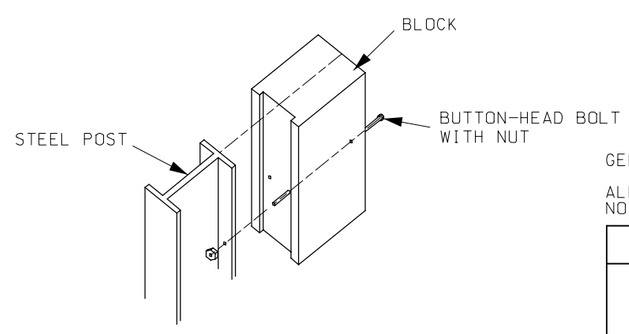

EXPLODED VIEW

(RAIL AND WASHER NOT SHOWN)

GENERAL NOTE:

ALL DIMENSIONS SHOWN ARE IN mm UNLESS OTHERWISE NOTED.

MISSOURI HIGHWAYS AND TRANSPORTATION COMMISSION

GUARDRAIL
ANCHORED IN BACKSLOPE
GENERAL DETAILS

DATE:_____ EFFECTIVE:07-01-2004 **M606.00AQ** 15/16

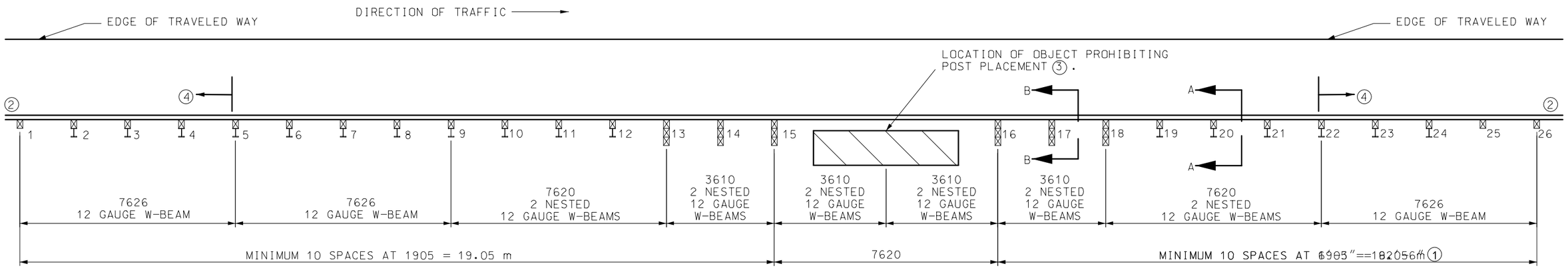

PLAN

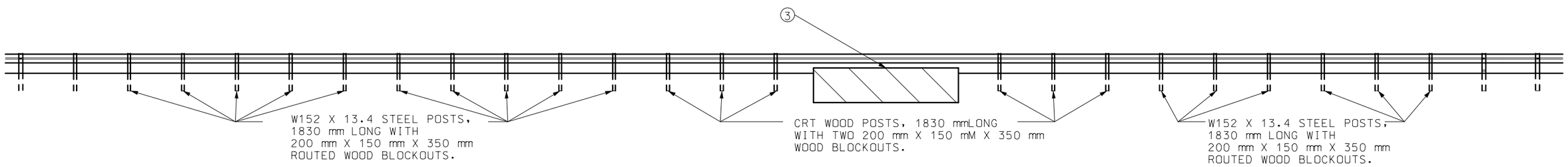

ELEVATION

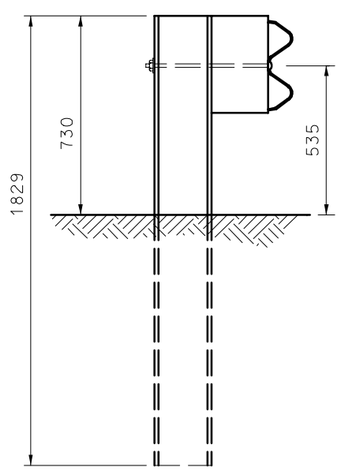

SECTION A-A

W152 X 13.4 STEEL POSTS, 1830 mm LONG WITH 200 mm X 150 mm X 350 mm ROUTED WOOD BLOCKOUTSPOSTS 3 THROUGH 12 AND 19 THROUGH 24.

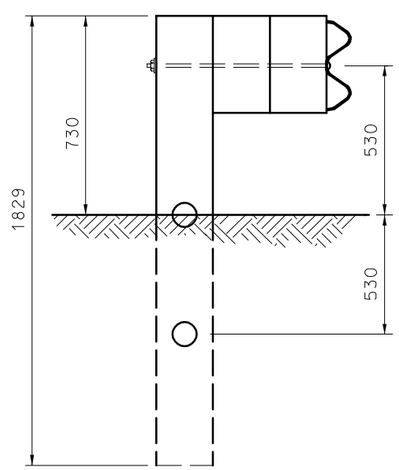

SECTION B-B

CRT WOOD POSTS, 1830 mmLONG WITH TWO 200 mm X 150 mM X 350 mm WOOD BLOCKOUTS POSTS 13 THROUGH 18.

(1) IF LOCATED WITHIN THE CLEAR ZONE OF A TWO-WAY ROADWAY, THE MINIMUM LENGTH IS 26.67 m.

(2) ADDITIONAL GUARDRAIL AS REQUIRED, INCLUDING END TREATMENT.

(3) THE POST MAY BE SKIPPED DUE TO THE PRESENCE OF AN OBSTACLE SUCH AS A CULVERT.

(4) PLACE END TREATMENT NO CLOSER TO THE SKIPPED POST THAN POSTS 5 AND 22.

GENERAL NOTES:

ALL DIMENSIONS ARE SHOWN IN mm UNLESS OTHERWISE NOTED.

MISSOURI HIGHWAYS AND TRANSPORTATION COMMISSION

GUARDRAIL
SKIPPING A POST
(MODIFIED LONG-SPAN GUARDRAIL SYSTEM)

DATE:_____ EFFECTIVE: 07-01-2004 **M606.00AQ** 16/16