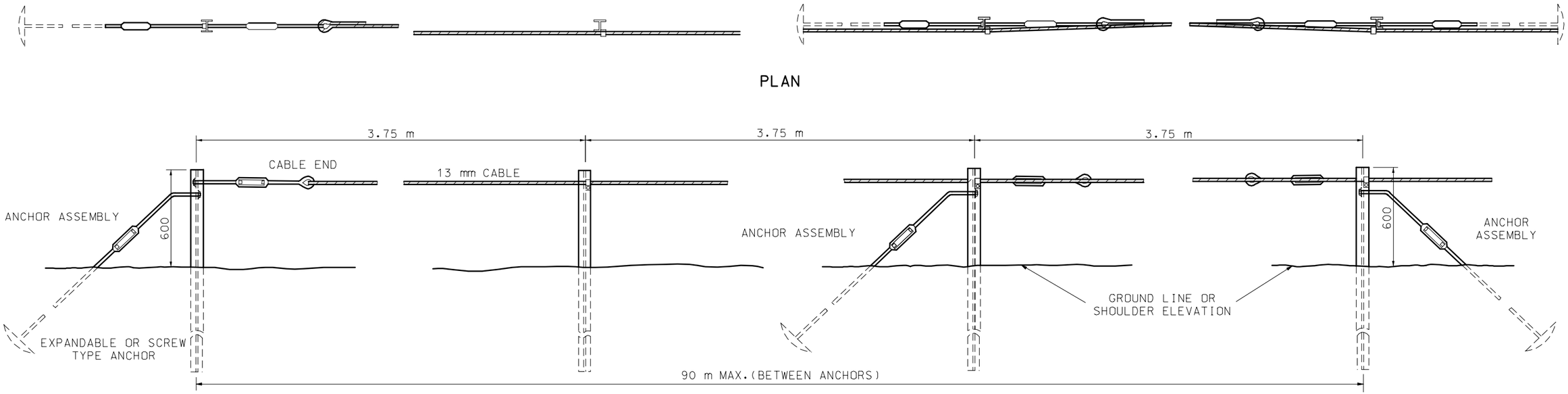

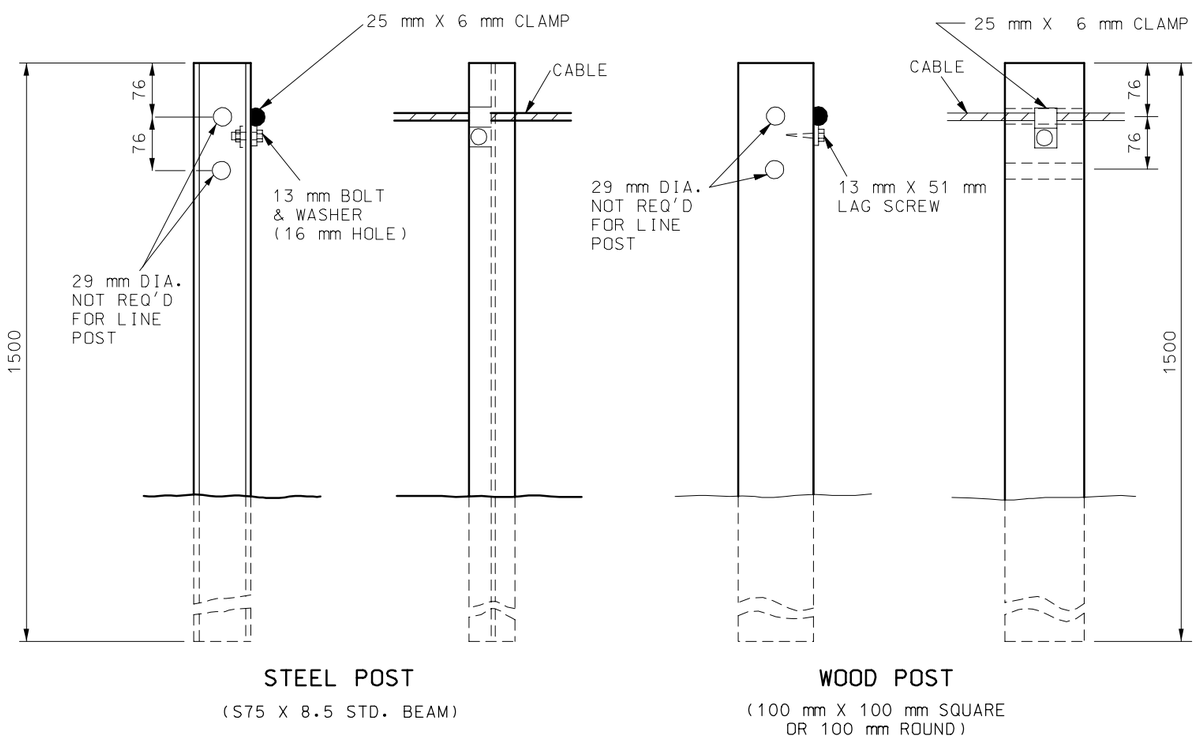

POST DETAILS

GENERAL NOTE:

ALL DIMENSIONS SHOWN ARE IN mm UNLESS OTHERWISE NOTED.

MISSOURI HIGHWAYS AND TRANSPORTATION COMMISSION

ONE-STRAND ACCESS RESTRAINT CABLE

DATE:_____ EFFECTIVE: 07-01-2004 **M606.40D** 1/2

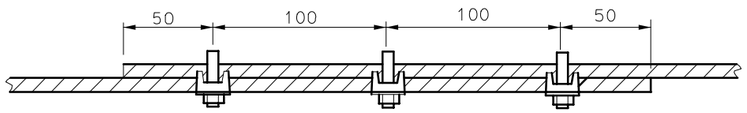

ACCESS-RESTRAINT CABLE GREATER THAN 90 METERS IN LENGTH REQUIRES AN INTER-MEDIATE ANCHOR AS SHOWN.

SPLICE DETAIL

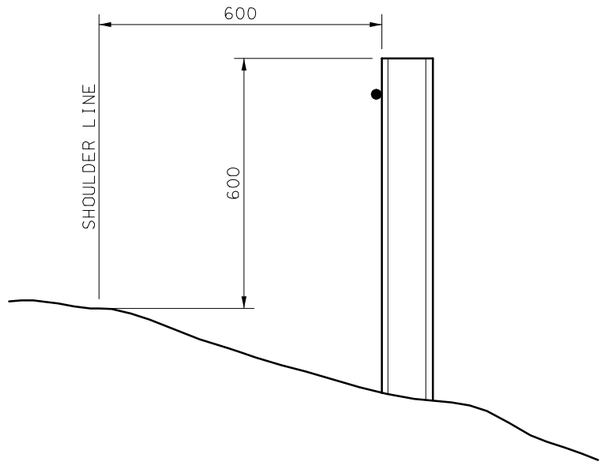

TYPICAL LOCATION SHOULDER INSTALLATION

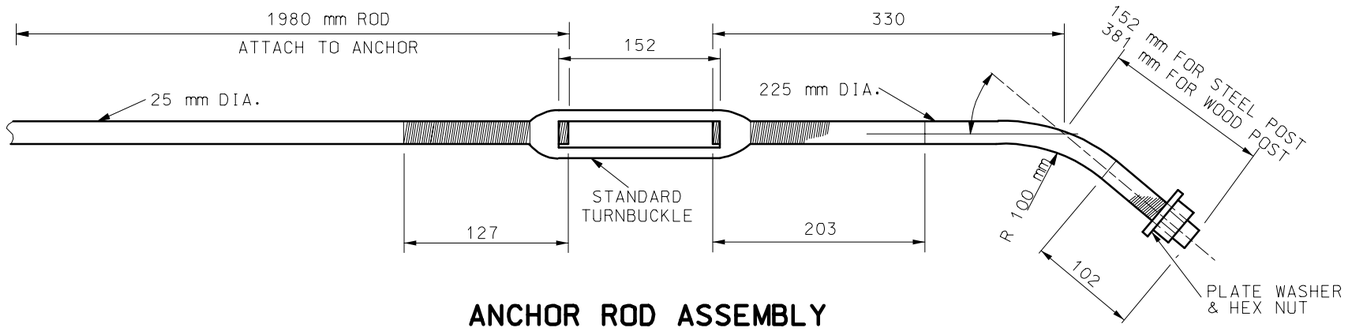

ANCHOR ROD ASSEMBLY

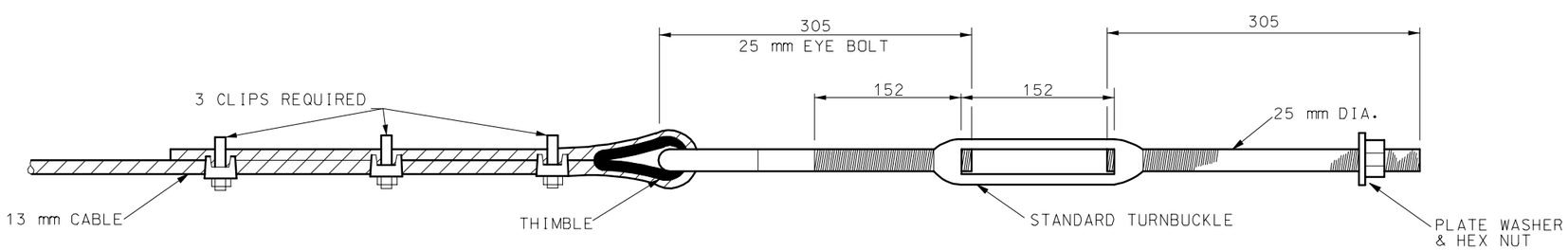

CABLE END

GENERAL NOTE:

ALL DIMENSIONS SHOWN ARE IN mm UNLESS OTHERWISE NOTED.

MISSOURI HIGHWAYS AND TRANSPORTATION COMMISSION

ONE-STRAND ACCESS RESTRAINT CABLE

DATE:_____ | EFFECTIVE: 07-01-2004 | **M606.40D** | 2/2