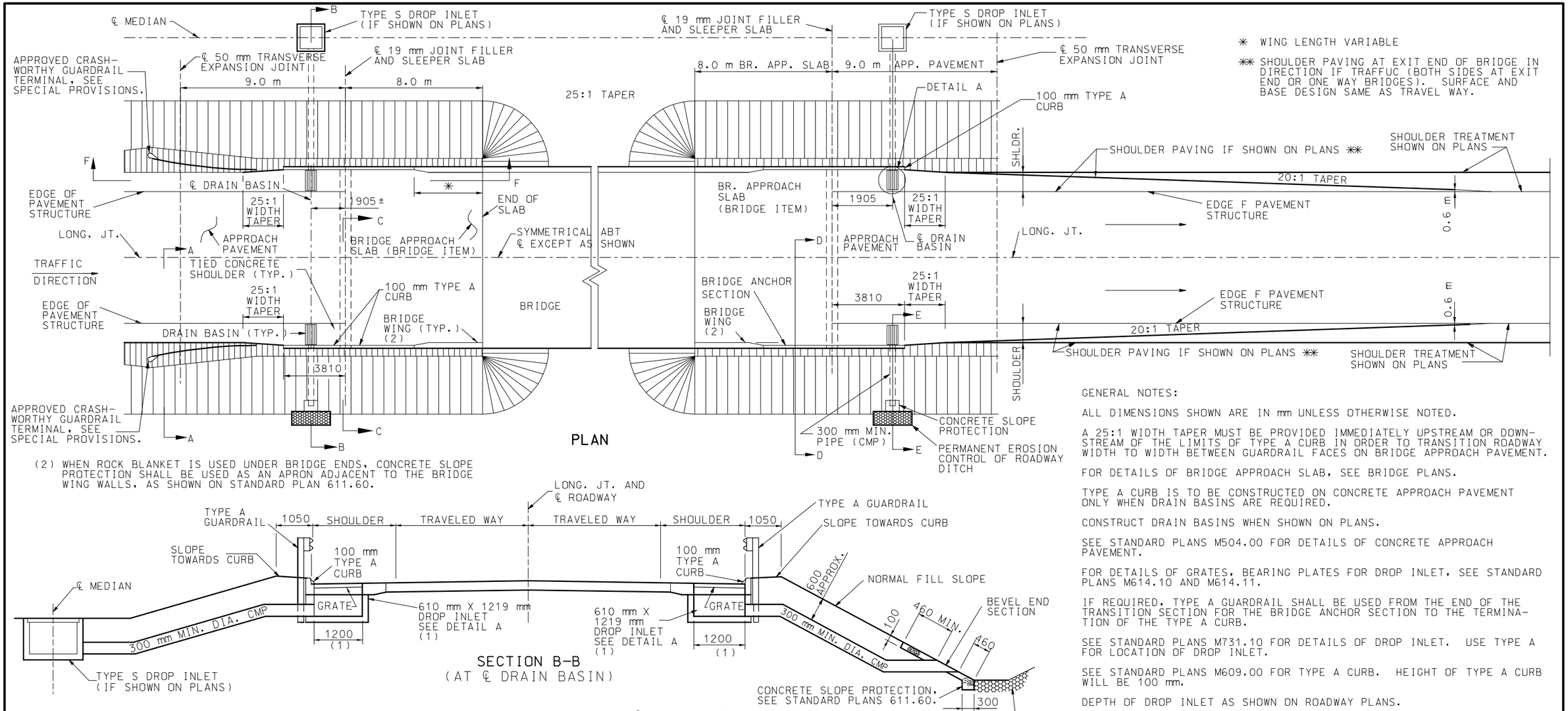

✱ WING LENGTH VARIABLE

✱✱ SHOULDER PAVING AT EXIT END OF BRIDGE IN DIRECTION IF TRAFFUC (BOTH SIDES AT EXIT END OR ONE WAY BRIDGES). SURFACE AND BASE DESIGN SAME AS TRAVEL WAY.

(2) WHEN ROCK BLANKET IS USED UNDER BRIDGE ENDS, CONCRETE SLOPE PROTECTION SHALL BE USED AS AN APRON ADJACENT TO THE BRIDGE WING WALLS, AS SHOWN ON STANDARD PLAN 611.60.

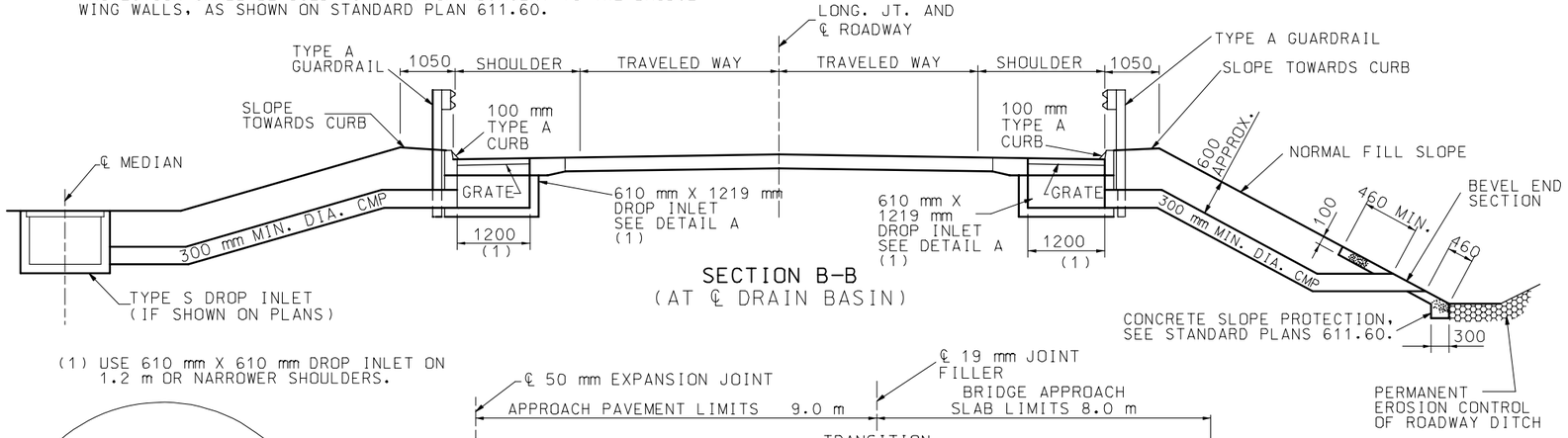

SECTION B-B
(AT ℄ DRAIN BASIN)

(1) USE 610 mm X 610 mm DROP INLET ON 1.2 m OR NARROWER SHOULDERS.

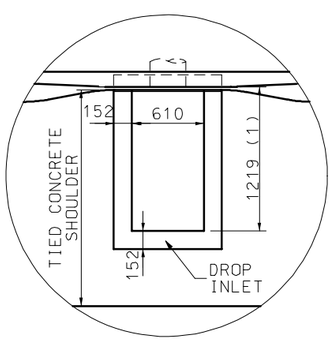

DETAIL A

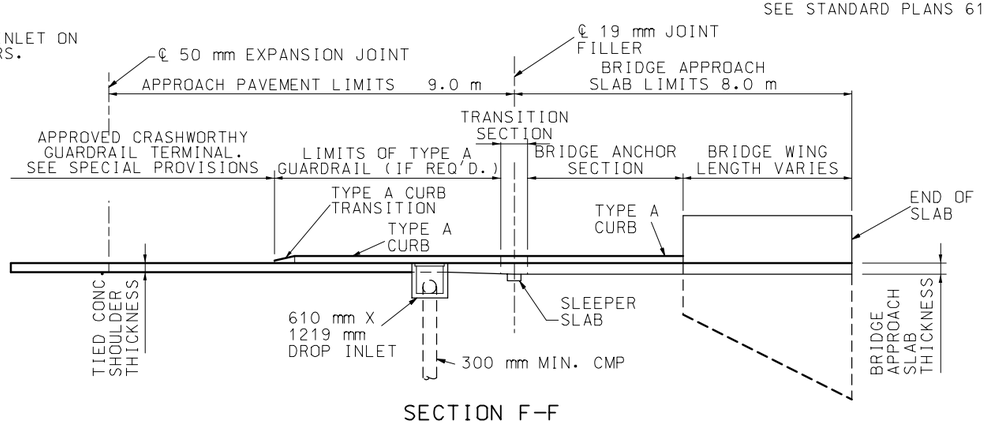

SECTION F-F

NOTE:
DETAILS OF APPROVED CRASHWORTHY GUARDRAIL TERMINAL. TYPE A GUARDRAIL, TRANSITION SECTION AND BRIDGE ANCHOR SECTION ARE NOT SHOWN FOR CLARITY.

GENERAL NOTES:

ALL DIMENSIONS SHOWN ARE IN mm UNLESS OTHERWISE NOTED.

A 25:1 WIDTH TAPER MUST BE PROVIDED IMMEDIATELY UPSTREAM OR DOWN-STREAM OF THE LIMITS OF TYPE A CURB IN ORDER TO TRANSITION ROADWAY WIDTH TO WIDTH BETWEEN GUARDRAIL FACES ON BRIDGE APPROACH PAVEMENT.

FOR DETAILS OF BRIDGE APPROACH SLAB, SEE BRIDGE PLANS.

TYPE A CURB IS TO BE CONSTRUCTED ON CONCRETE APPROACH PAVEMENT ONLY WHEN DRAIN BASINS ARE REQUIRED.

CONSTRUCT DRAIN BASINS WHEN SHOWN ON PLANS.

SEE STANDARD PLANS M504.00 FOR DETAILS OF CONCRETE APPROACH PAVEMENT.

FOR DETAILS OF GRATES, BEARING PLATES FOR DROP INLET, SEE STANDARD PLANS M614.10 AND M614.11.

IF REQUIRED, TYPE A GUARDRAIL SHALL BE USED FROM THE END OF THE TRANSITION SECTION FOR THE BRIDGE ANCHOR SECTION TO THE TERMINA-TION OF THE TYPE A CURB.

SEE STANDARD PLANS M731.10 FOR DETAILS OF DROP INLET. USE TYPE A FOR LOCATION OF DROP INLET.

SEE STANDARD PLANS M609.00 FOR TYPE A CURB. HEIGHT OF TYPE A CURB WILL BE 100 mm.

DEPTH OF DROP INLET AS SHOWN ON ROADWAY PLANS.

PAYMENT FOR MATERIALS, EXCAVATION, AND PLACING OF CONCRETE SLOPE PROTECTION WILL BE PAID FOR AT THE CONTRACT UNIT BID PRICE PER SQUARE METER.

PAYMENT FOR DROP INLET, GRATE, CMP, PERMANENT EROSION CONTROL MATERIAL AND INSTALLATION WILL BE PAID FOR AT THE CONTRACT UNIT PRICE FOR DRAIN BASIN PER EACH.

FOR DETAILS OF SECTION A-A, C-C, D-D AND E-D, SEE SEET 2 OF 2.

ON THE APPROACH PAVEMENT, TYPE A CURB WILL BE INCLUDED WITH THE TYPE A CURB BID ITEM.

MISSOURI HIGHWAYS AND TRANSPORTATION COMMISSION

DRAIN BASIN, SHOULDER PAVING AND FILL SLOPES AT BRIDGE ENDS

DATE:_____ EFFECTIVE: 07-01-2004 **M609.40M** 1/2

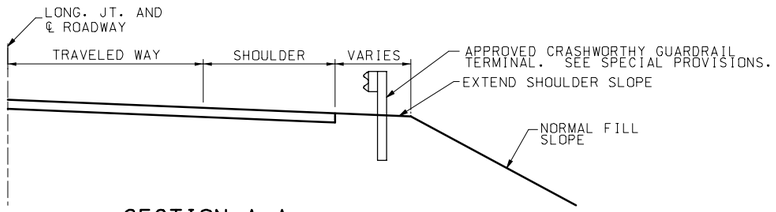

SECTION A-A

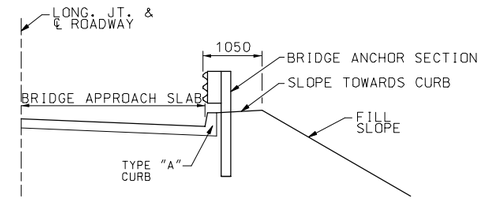

NOTE: FOR DETAILS NOT SHOWN, SEE OTHER SECTIONS.

SECTION D-D
THRU BRIDGE ANCHOR SECTION

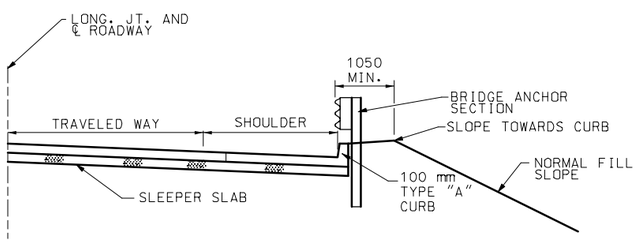

SECTION C-C

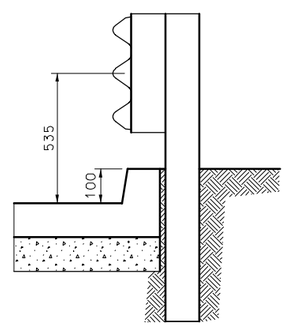

GUARD RAIL AT BARRIER CURB

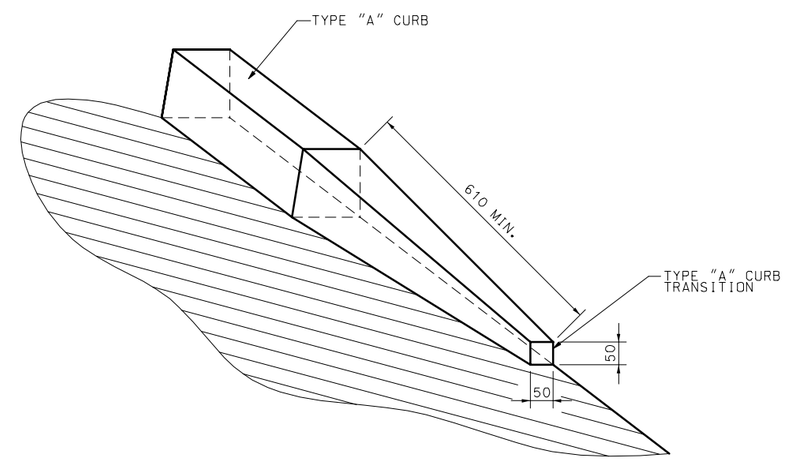

TYPE "A" CURB
TRANSITION DETAIL

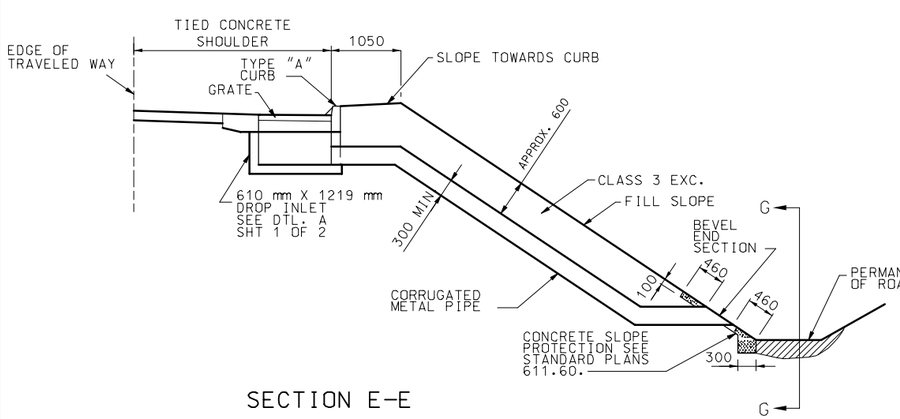

SECTION E-E

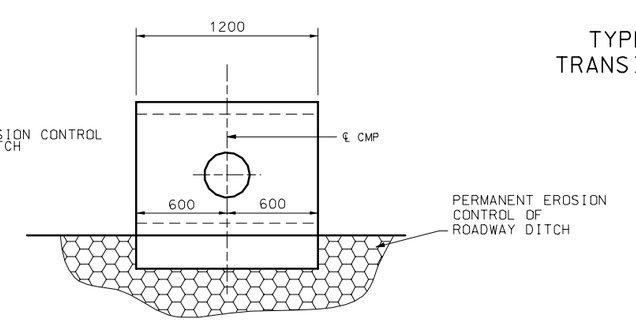

SECTION G-G

GENERAL NOTES:

ALL DIMENSIONS SHOWN ARE IN mm UNLESS OTHERWISE NOTED.

FOR LOCATION OF SEC. A-A, C-C, D-D, AND E-E, SEE SHEET 1 OF 1.

MISSOURI HIGHWAYS AND TRANSPORTATION COMMISSION

DRAIN BASIN, SHOULDER PAVING AND FILL SLOPE AT BRIDGE ENDS

DATE:_____ | EFFECTIVE:07-01-2004 | **M609.40M** | 2/2