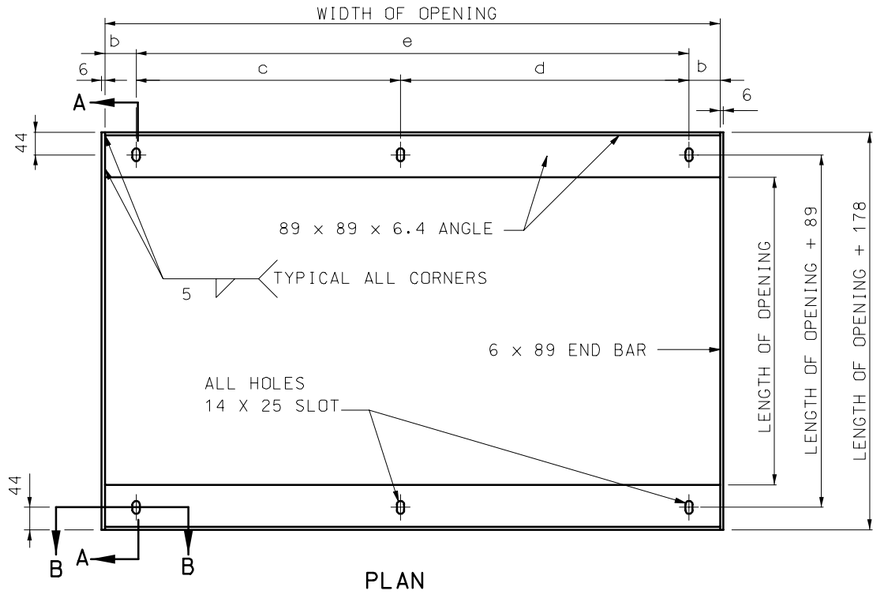

PLAN
BEARING PLATE

END VIEW OF BEARING BAR

WEIGHT AND DIMENSIONS DATA

OPENING		WEIGHT (1)	BEARING BARS				DIMENSIONS					REMARKS
WIDTH mm	LENGTH mm	kg	x mm	y mm	LENGTH mm	NUMBER	a mm	b mm	c mm	d mm	e mm	
914	610	86	10	76	756	11	21	72			772	USE WITH TYPE S-1 INLETS AND TYPE S HEADWALLS
914	914	150	16	76	1060	10	32	89			737	
1524	610	136	10	76	756	18	25	76	686	686		
1524	914	249	16	76	1060	17	14	72	645	737		
940	635	91	10	76	781	11	33	84			772	USE WITH TYPE S-2 AND TYPE S-3 INLETS ONLY
940	940	154	16	76	1085	10	44	102			737	
1549	635	141	10	76	781	18	38	89	686	686		
1549	940	254	16	76	1085	17	27	84	645	737		

(1) THE WEIGHT OF THE GRATE AND BEARING PLATE INCLUDES THE BOLTS, NUTS, AND WASHERS AND SHALL BE AS SHOWN WITH A TOLERANCE OF 5 PERCENT.

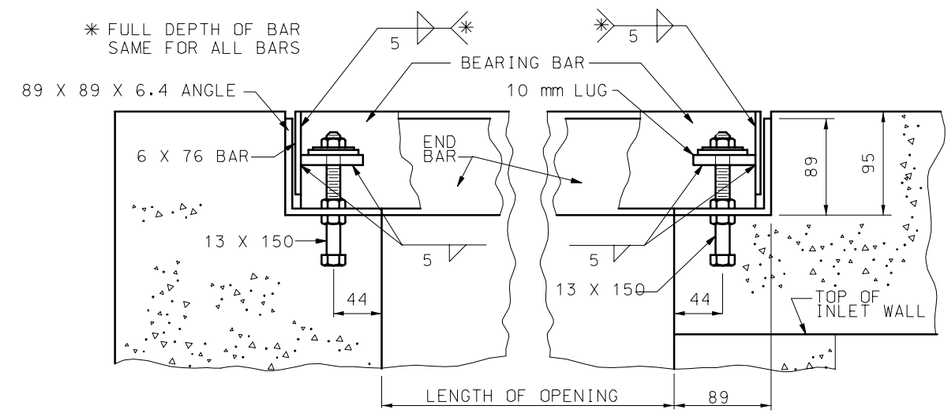

SECTION A-A

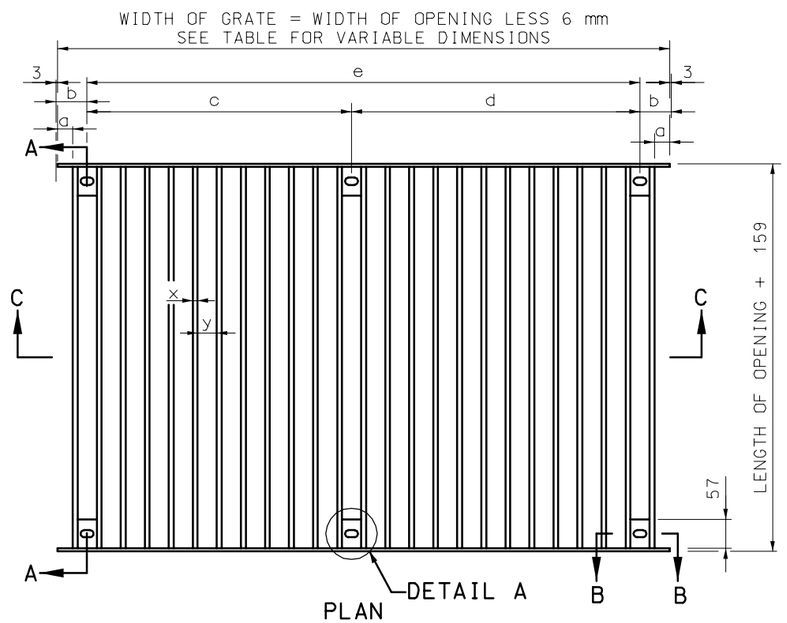

PLAN

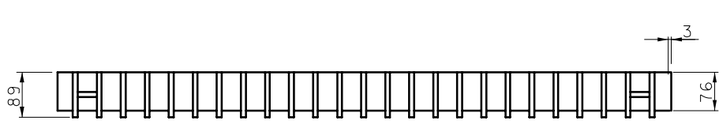

SECTION C-C
GRATE

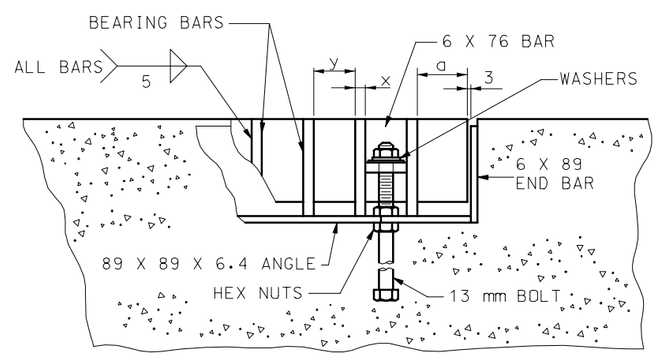

SECTION B-B

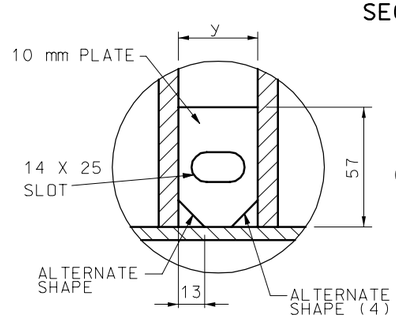

DETAIL A

(4) OTHER ALTERNATE SHAPES ARE ALLOWED, UPON APPROVAL, PROVIDED 100 mm OF WELD IS MAINTAINED SYMETRICALLY AROUND THE PLATE AND THE NOMINAL DIMENSIONS OF THE PLATE AND SLOT ARE MAINTAINED.

GENERAL NOTES:

ALL DIMENSIONS SHOWN ARE IN mm UNLESS OTHERWISE NOTED.

WHEN BOLTS ARE CUT IN THE FIELD, THREADS MUST BE CLEANED TO PERMIT THE FINAL NUT TO RUN FREELY ON THE BOLT.

THE WELDING REQUIREMENTS SHOWN ON THIS DRAWING ARE FOR PAINTED GRATES AND BEARING PLATES. IF GALVANIZED, ALL TIGHTLY CONTACTING SURFACES SHALL BE COMPLETELY SEALED, ON ALL SIDES BY WELDING, PRIOR TO GALVANIZING.

MISSOURI HIGHWAYS AND TRANSPORTATION COMMISSION

GRATES & BEARING PLATES

DATE:_____ EFFECTIVE: 12-01-2005 **M614.10T** 1/1