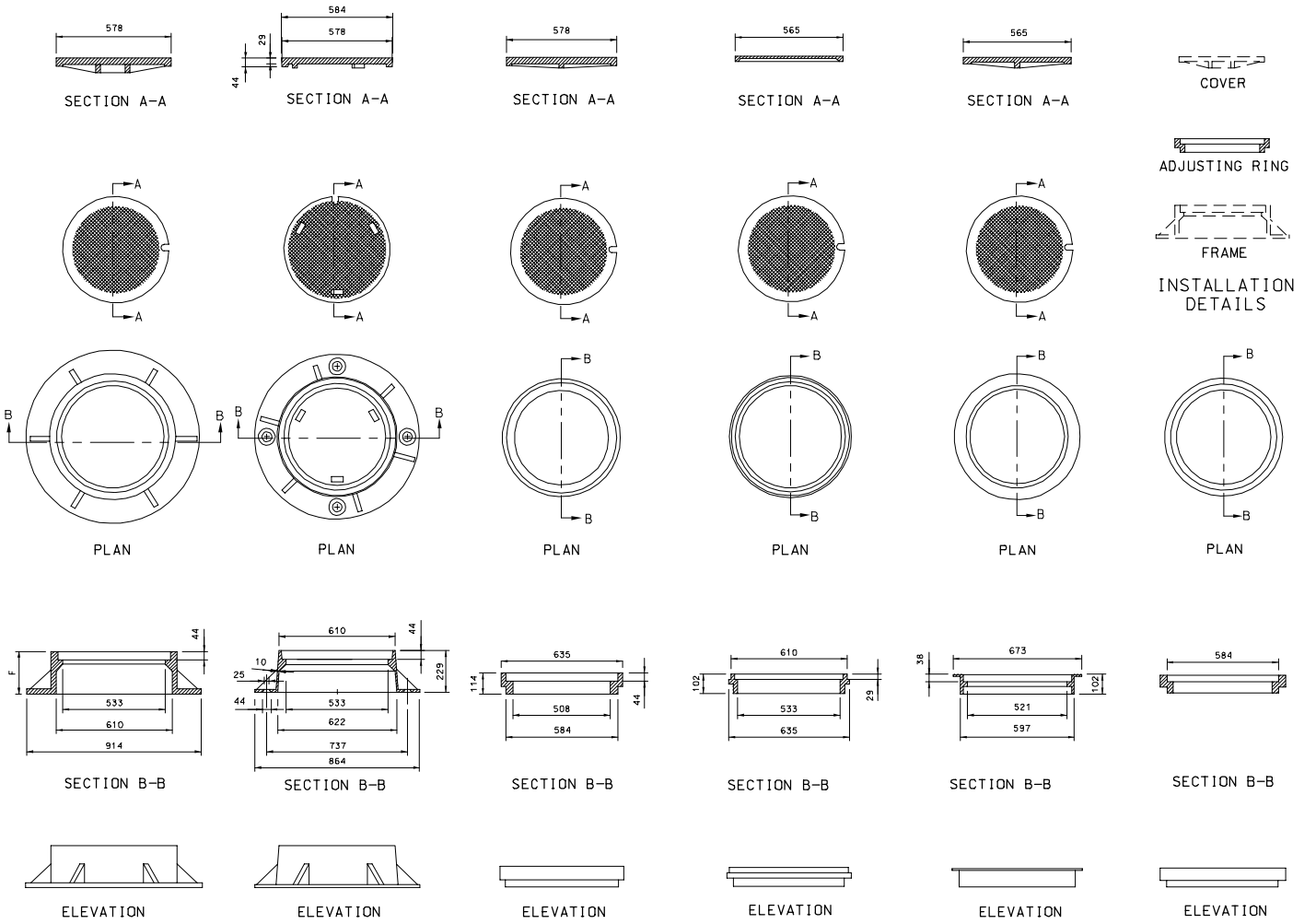

APPROXIMATE WEIGHT OF FRAME & COVER 68 kg.

ALTERNATE TYPE 4 COVER

TYPE 1A & 1B

APPROXIMATE WEIGHT OF FRAME & COVER
TYPE 1A 245 kg.
TYPE 1B 259 kg.

TYPE 1C

APPROXIMATE WEIGHT OF FRAME & COVER 131 kg.

TYPE 2

APPROXIMATE WEIGHT OF FRAME & COVER 113 kg.

TYPE 3

APPROXIMATE WEIGHT OF FRAME & COVER 52 kg.

TYPE 4

APPROXIMATE WEIGHT OF FRAME & COVER 73 kg.
(SEE ALTERNATE COVER)

ADJUSTING RING

SOLID OR ADJUSTABLE

GENERAL NOTES:

ALL DIMENSIONS SHOWN ARE IN mm UNLES OTHERWISE NOTED.

TYPE 1A:
WHEN "P" (PAVEMENT THICKNESS) IS 203 mm USE MANHOLE FRAME WITH 229 mm HEIGHT (F) APPROXIMATE MASS OF FRAME & COVER, 245 kg CLASS 35 (241 MPa) CASTING.

TYPE 1B:
WHEN "P" (PAVEMENT THICKNESS) IS 229 mm OR 254 mm, USE MANHOLE FRAME WITH 254 mm HEIGHT (F) APPROXIMATE MASS OF FRAME & COVER, 259 kg CLASS 35 (241 MPa) CASTING.

TYPE 1C:
TYPE 1C MANHOLE FRAME AND COVER WILL BE ACCEPTED AS AN ALTERNATE TO TYPE 1A OR TYPE 1B. APPROXIMATE MASS OF FRAME AND COVER, 131 kg.

FOR "P" GREATER THAN 254 mm ADJUSTING RINGS COMBINED WITH MANHOLE FRAMES WITH "F" EQUAL TO 229 mm OR 254 mm SHALL BE USED TO MATCH PAVEMENT THICKNESS.

THE PRICE BID FOR MANHOLE FRAME AND COVER SHALL INCLUDE THE NUMBER OF ADJUSTING RINGS REQUIRED TO MATCH PAVEMENT THICKNESS.

WHEN SPECIFIED, USE A LOCK TYPE FRAME & COVER WITH A MINIMUM OF THREE LOCK BLOCKS AND BOLTS.

MANHOLE ADJUSTING RINGS SHALL BE SECURED TO EITHER THE FRAME OR PAVEMENT TO PREVENT MOVEMENT UNDER TRAFFIC.

A CHECKERED DESIGN TOP SHALL BE FURNISHED.

MISSOURI HIGHWAY AND TRANSPORTATION COMMISSION

MANHOLE FRAMES AND COVERS

DATE:_____ | EFFECTIVE:03-01-1996 | M614.30E | 1/1

T:\de-proj\standards\Dual Units\stdpln 600-699\614.30e.dgn 13 FEB 2001