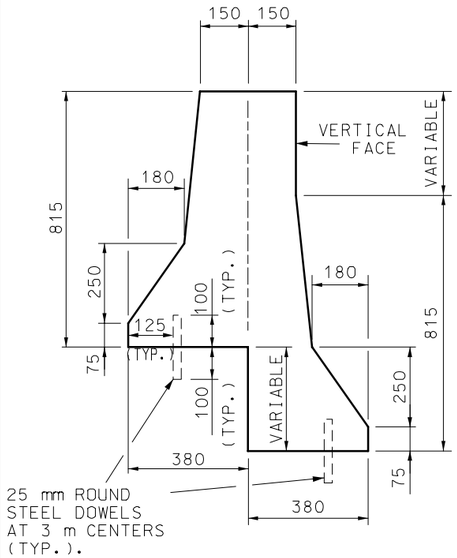

TYPICAL VIEW
BARRIER FOR
STEPPED PAVEMENT

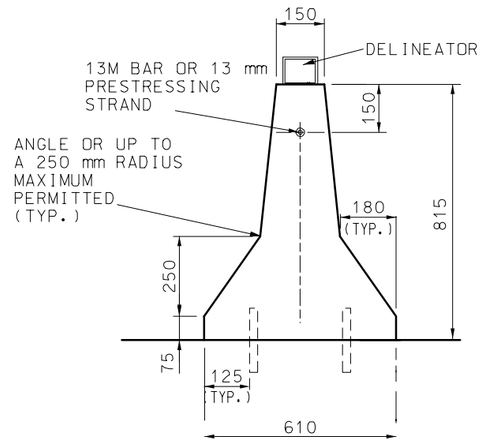

TYPICAL VIEW
TYPE A - TWO TRAFFIC FACES

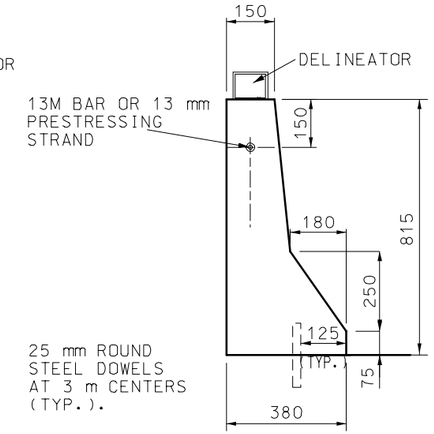

TYPICAL VIEW
TYPE B - ONE TRAFFIC FACE

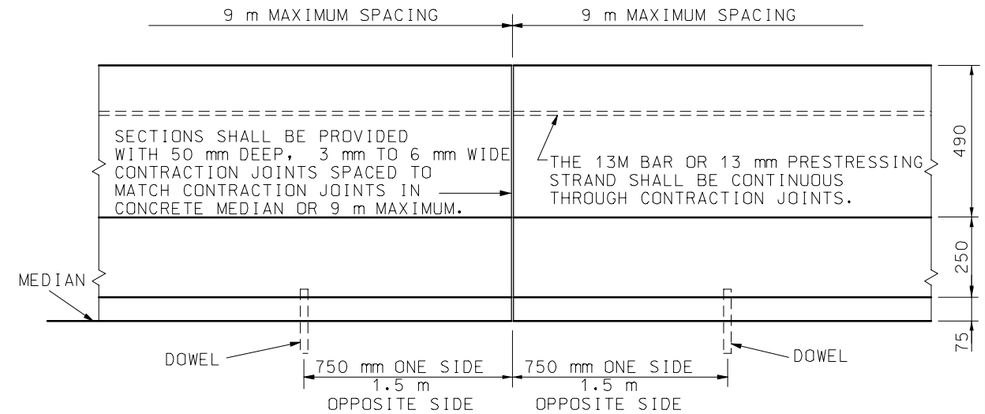

ELEVATION

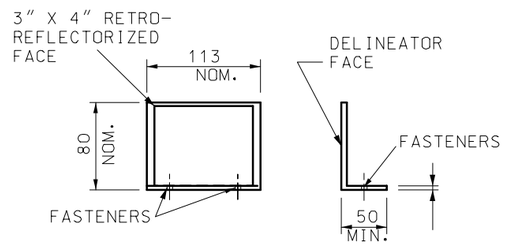

DELINEATOR

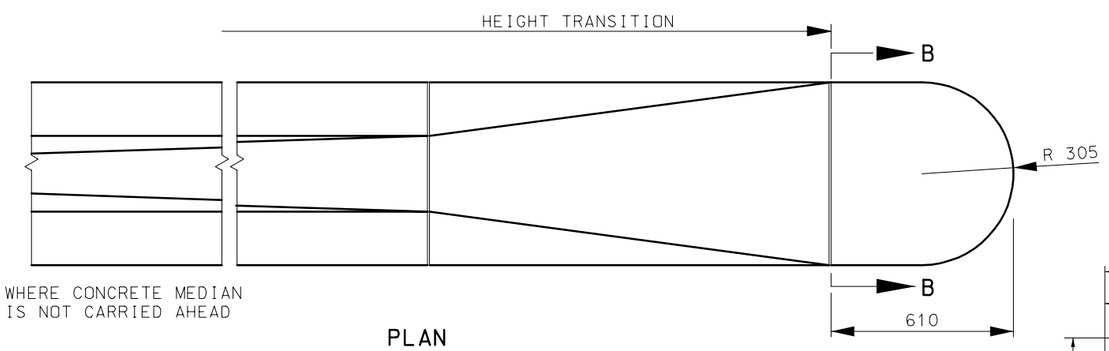

PLAN

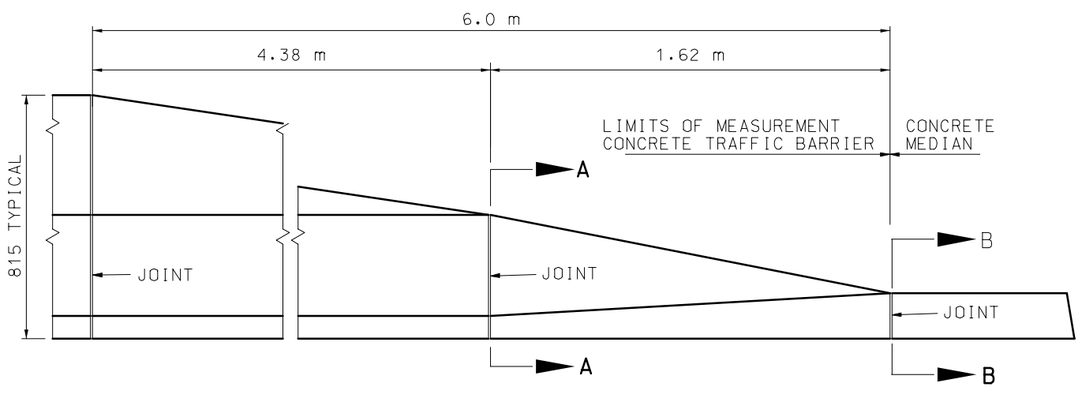

ELEVATION
BARRIER HEIGHT TRANSITION

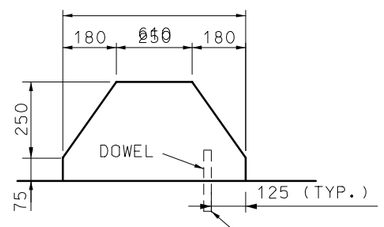

SECTION A-A

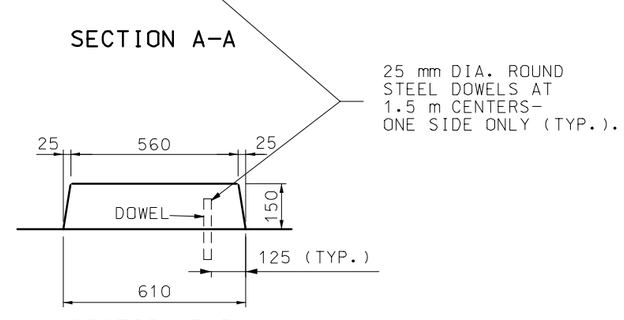

SECTION B-B

GENERAL NOTES:

ALL DIMENSIONS SHOWN ARE IN mm UNLESS OTHERWISE NOTED.

HEIGHT TRANSITIONS SHALL NOT BE USED IN LOCATIONS WHERE THE POSTED SPEED IS GREATER THAN 35 MPH.

ALL TOP AND END EDGES SHALL BE CHAMFERED 19 mm.

EXPANSION JOINTS SHALL BE PROVIDED IN THE BARRIER TO MATCH EXPANSION JOINTS IN PAVEMENT.

MISSOURI HIGHWAYS AND TRANSPORTATION COMMISSION

PERMANENT CONCRETE TRAFFIC BARRIER

TYPE A AND B

DATE:_____ EFFECTIVE: 07-01-2004 **M617.10C** 1/7

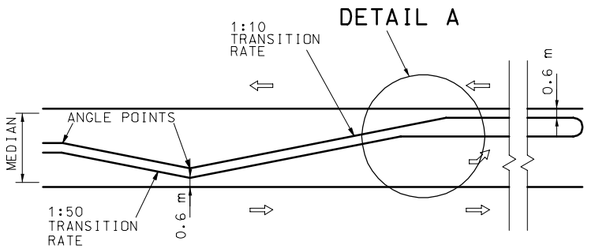

PLAN

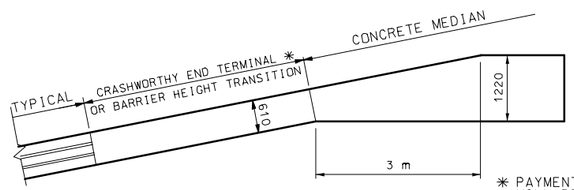

✳ PAYMENT FOR THE END TERMINAL WILL BE CONSIDERED FULL COMPENSATION FOR END TERMINAL, BACKUP ASSEMBLIES, OR OTHER ITEMS NECESSARY FOR PROPER INSTALLATION AS REQUIRED BY THE MANUFACTURER.

DETAIL A

LEFT TURN LANE TRANSITION

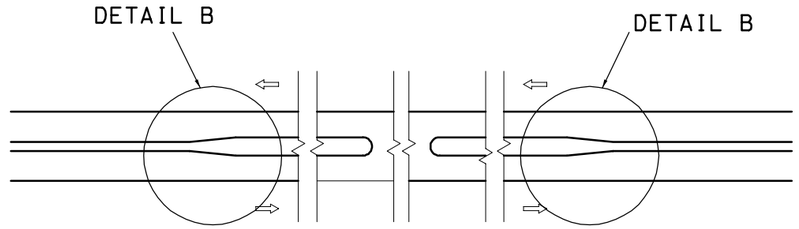

PLAN

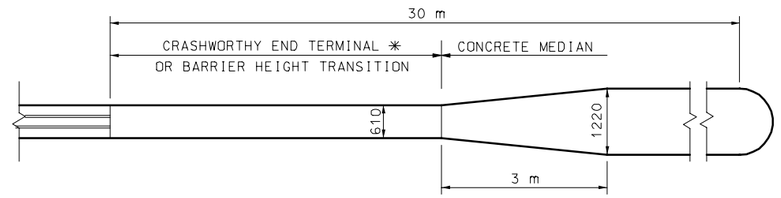

DETAIL B

MEDIAN OPENING TRANSITION

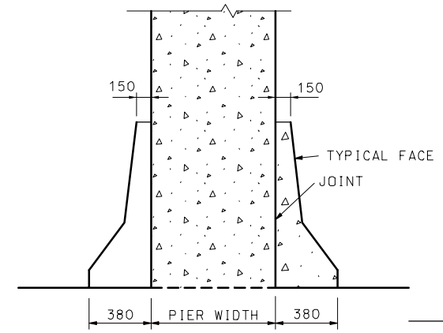

SECTION C-C

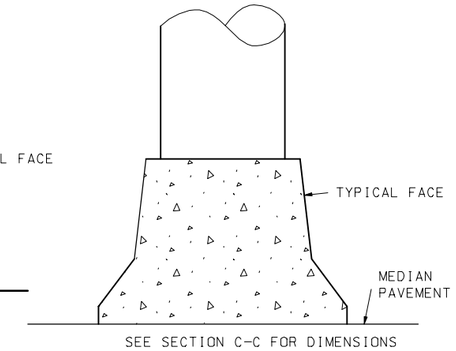

SECTION B-B

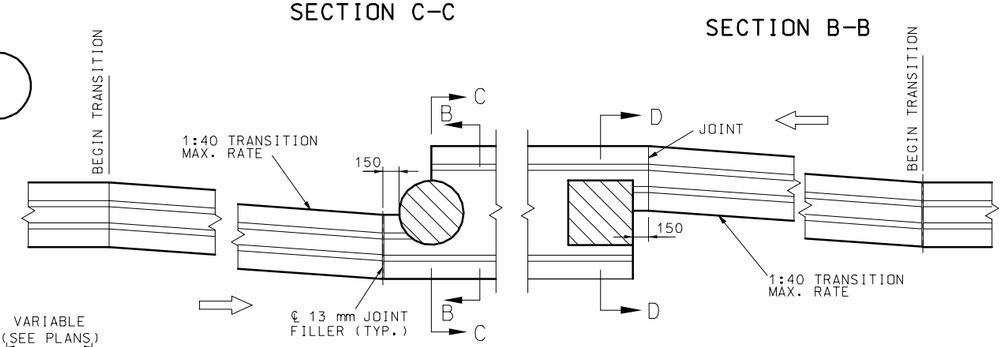

PLAN

TRANSITION DETAILS FOR PIER PROTECTION

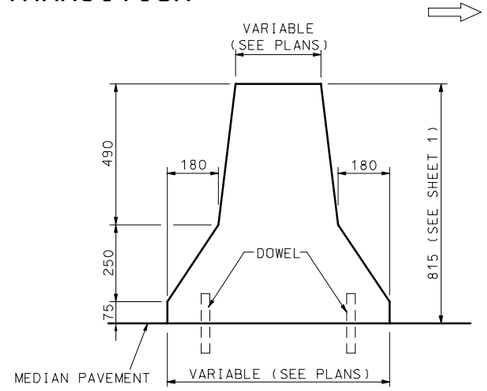

SECTION A-A

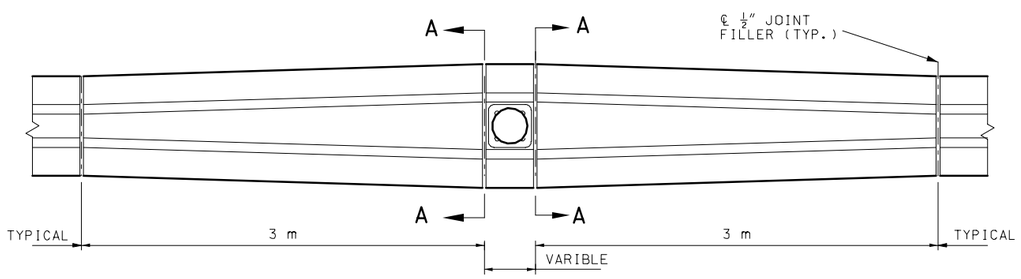

PLAN

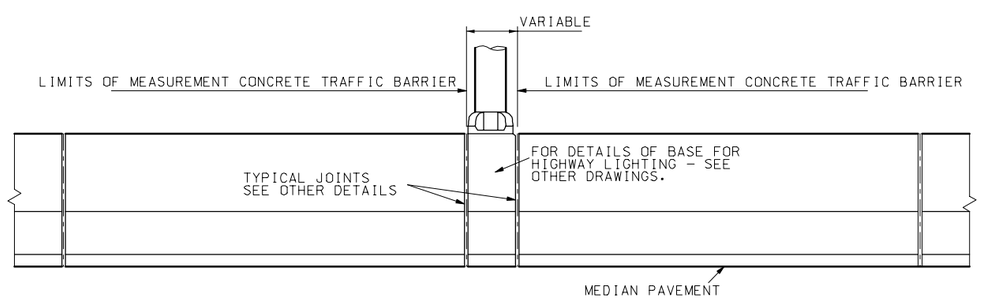

ELEVATION

TRANSITION DETAILS FOR MEDIAN LIGHTING

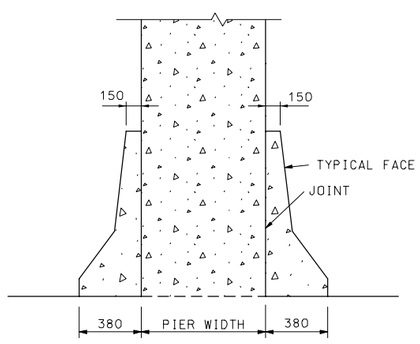

SECTION D-D

GENERAL NOTES:

ALL DIMENSIONS SHOWN ARE IN mm UNLESS OTHERWISE NOTED.

FOR DETAILS AND LOCATION OF DOWELS, SEE SHEET 1.

JOINT SHALL BE TWO LAYERS OF 25 kg. SMOOTH ROLL ROOFING TO FORM JOINT BETWEEN PIER AND BARRIER. IN SEISMIC AREAS, A 25 mm JOINT WITH JOINT FILLER AND SEALER SHALL BE USED.

MISSOURI HIGHWAYS AND TRANSPORTATION COMMISSION

PERMANENT CONCRETE TRAFFIC BARRIER

TYPE A AND B

DATE:_____ | EFFECTIVE: 07-01-2004 | **M617.10C** | 2/7

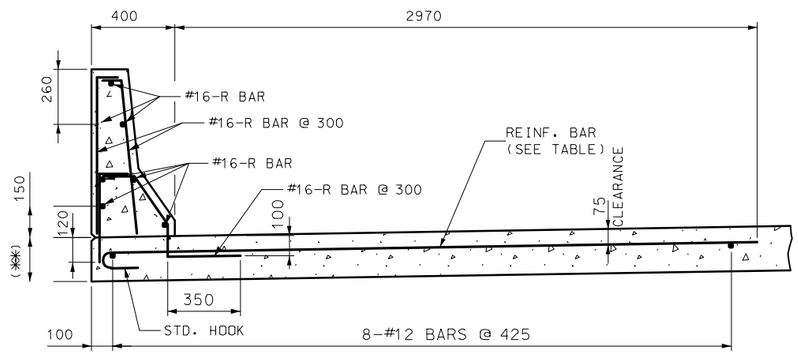

PART SECTION THRU PAVEMENT

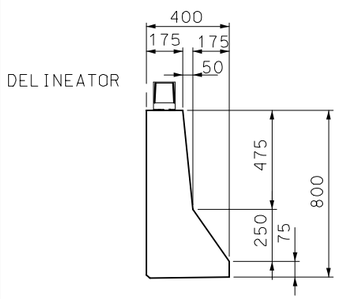

TYPE B (MOD.) TYPICAL SECTION

TABLE OF TRANSVERSE PAVEMENT REINFORCEMENT	
PAVEMENT THICKNESS ✱✱	BAR SIZE & SPACING
250 mm	#19 @ 225 mm
275 mm	#16 @ 200 mm
≥ 350 mm	#16 @ 275 mm

NOTES:

ALL REINFORCING STEEL SHALL BE EPOXY COATED.

NO DIRECT PAYMENT WILL BE MADE FOR REINFORCING STEEL.

MINIMUM CLEARANCE TO REINFORCING STEEL SHALL BE 40 mm, UNLESS OTHERWISE SHOWN.

✱✱ SEE ROADWAY PAVEMENT DESIGN.

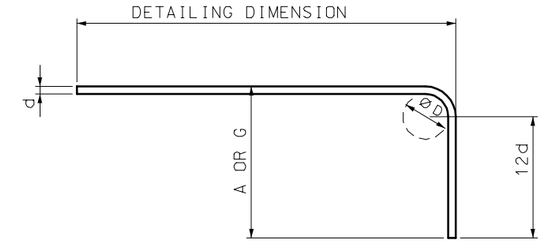

90° HOOKS

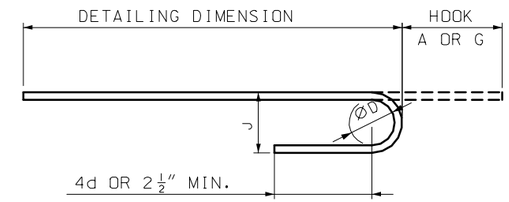

180° HOOKS

END HOOK DIMENSIONS				
BAR SIZE	D (mm)	ALL GRADES		
		180° HOOKS		90° HOOKS
		A OR G	J	A OR G
#5	94 mm	175 mm	125 mm	250 mm
#6	113 mm	200 mm	150 mm	300 mm

ALL STANDARD HOOKS AND BENDS OTHER THAN 180° TO BE BENT WITH THE SAME PROCEDURE AS FOR 90° STANDARD HOOKS.

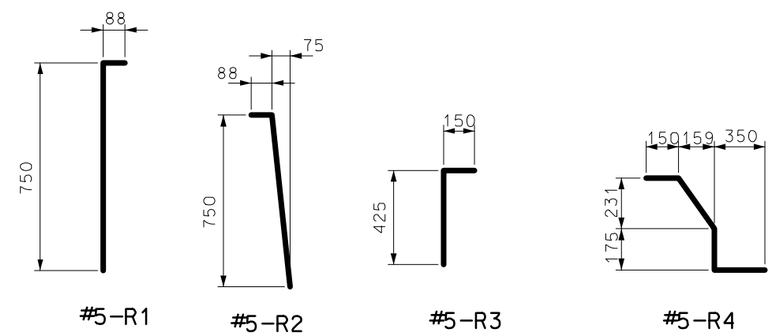

NOTES:

TYPE B (MODIFIED) SHALL BE USED ONLY AT LOCATIONS SHOWN IN PLANS.

FOR DELINEATOR DETAILS, SEE SHEET 1.

GENERAL NOTES:

ALL DIMENSIONS SHOWN ARE IN mm UNLESS OTHERWISE NOTED.

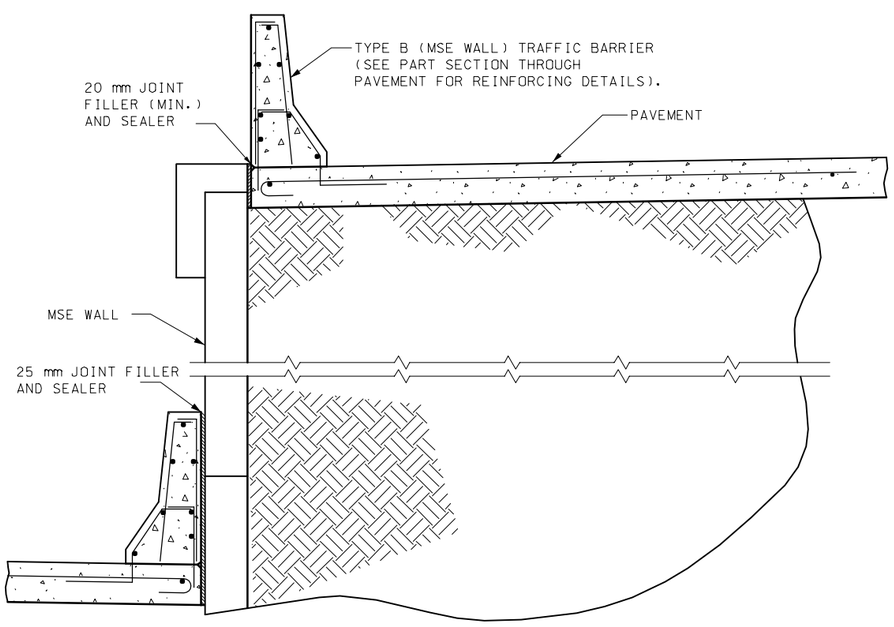

TYPE B (MSE WALL) TRAFFIC BARRIER ON TOP OF MSE WALL

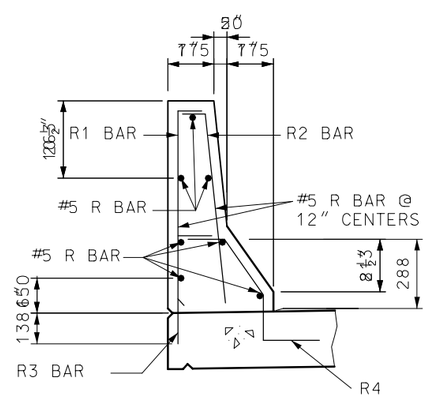

PART SECTION SHOWING REINFORCEMENT

MISSOURI HIGHWAYS AND TRANSPORTATION COMMISSION

PERMANENT CONCRETE TRAFFIC BARRIER

TYPE B (MSE WALL)

DATE:_____ EFFECTIVE: 07-01-2004 **M617.10C** 3/7

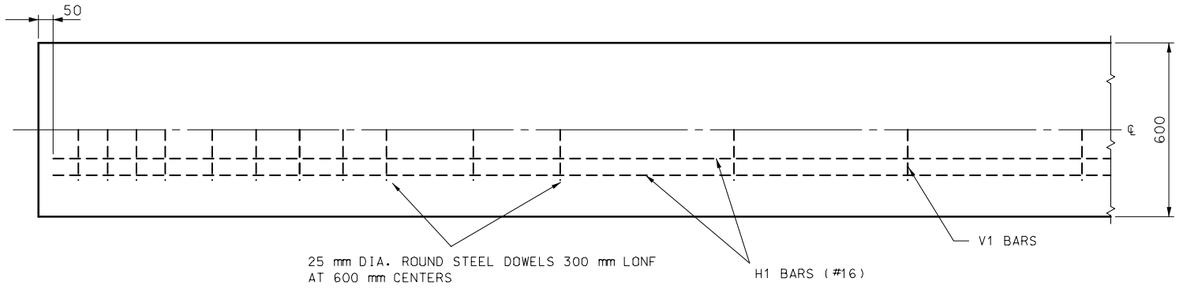

PLAN VIEW
(SYMMETRICAL ABOUT CENTER LINE)

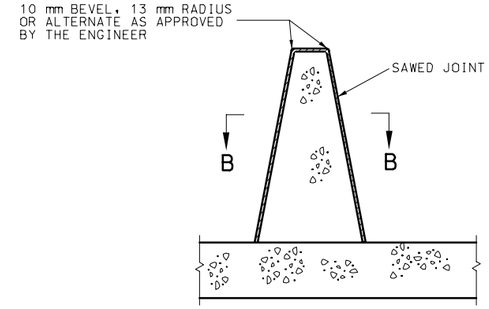

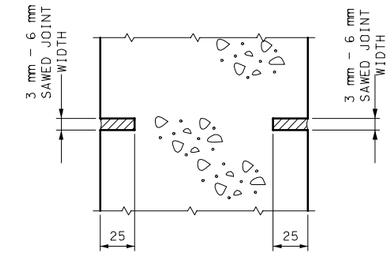

SECTION B-B

SECTION THROUGH SAWED JOINT

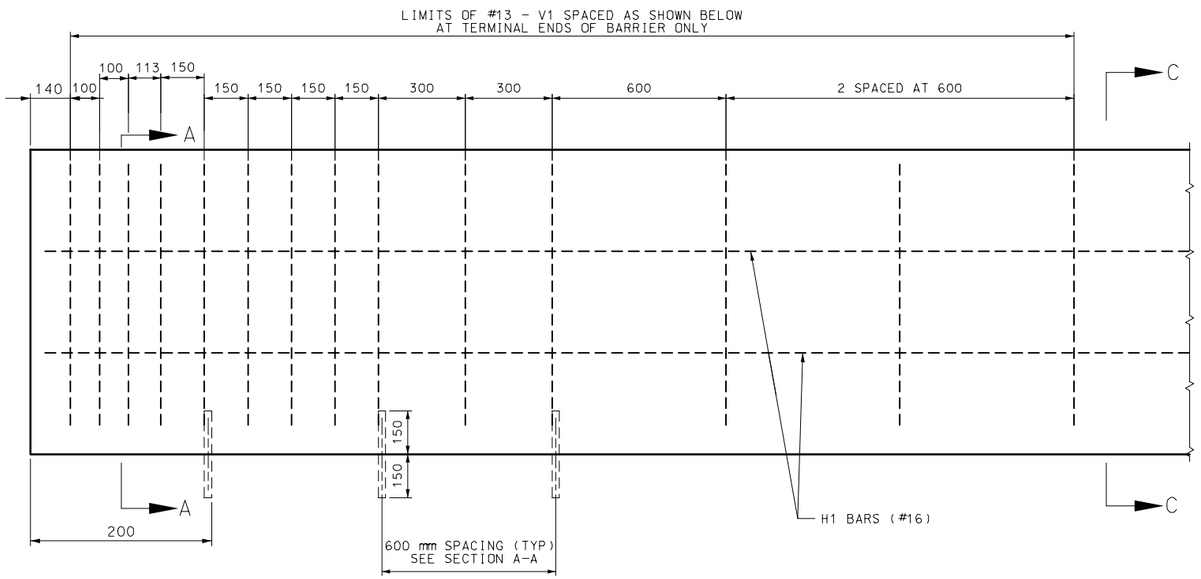

ELEVATION

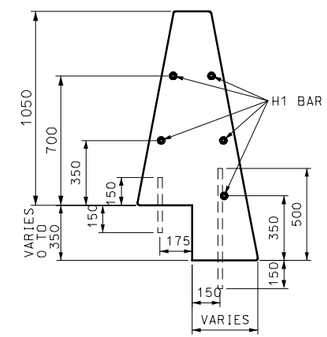

SECTION C-C
(STEPPED PAVEMENT)

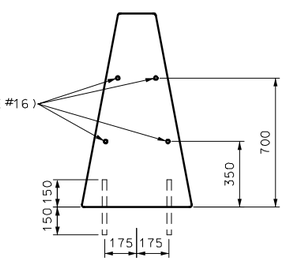

SECTION C-C
(NORMAL PAVEMENT)

NOTES:

BAR SPLICES SHALL BE A MINIMUM OF 24 TIMES THE NOMINAL DIAMETER OF THE BAR.

ANY METHOD DEVISED BY THE CONTRACTOR AND APPROVED BY THE ENGINEER THAT WILL ASSURE THE LONGITUDINAL REINFORCING STEEL WILL BE POSITIONED ±13 mm AS DIMENSIONED WILL BE SATISFACTORY.

THE CONTRACTOR HAS THE OPTION TO SLIP-FORM THE BARRIER. IN WHICH CASE, ADDITIONAL REINFORCEMENT MAY BE TIED TO THE UPPER TWO-THIRDS OF THE REINFORCING AGE TO PROVIDE BRACING.

SAWED JOINTS SHALL BE LOCATED AT PAVEMENT TRANSVERSE JOINTS.

GENERAL NOTES:

ALL DIMENSIONS SHOWN ARE IN mm UNLESS OTHERWISE NOTED.

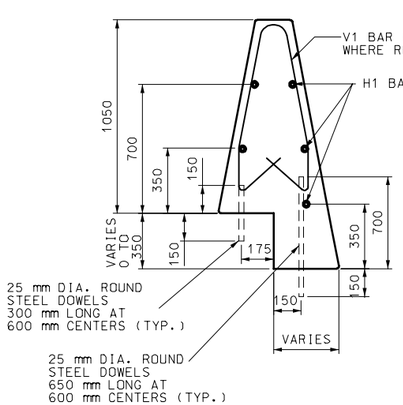

SECTION A-A
(STEPPED PAVEMENT)

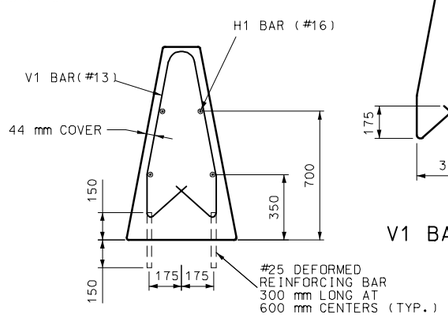

SECTION A-A
(NORMAL PAVEMENT)

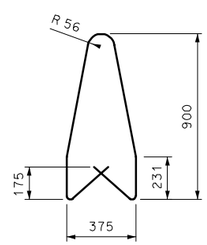

V1 BAR (#13)

REINFORCING DETAILS

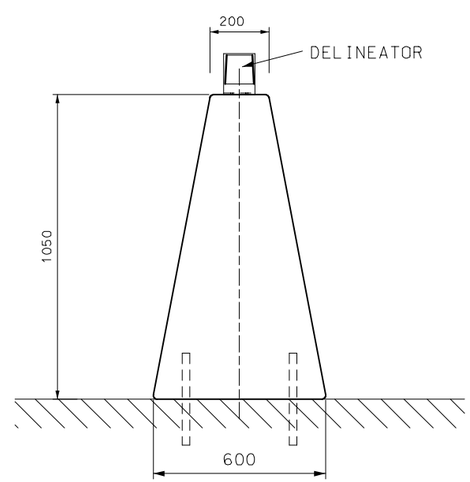

TYPE C
TYPICAL SECTION

MISSOURI HIGHWAYS AND TRANSPORTATION COMMISSION

PERMANENT CONCRETE TRAFFIC BARRIER

TYPE C

DATE:_____ EFFECTIVE: 07-01-2004 **M617.10C** 4/7

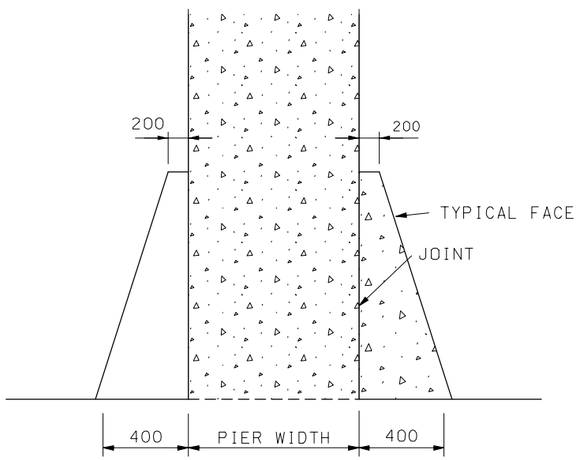

SECTION A-A

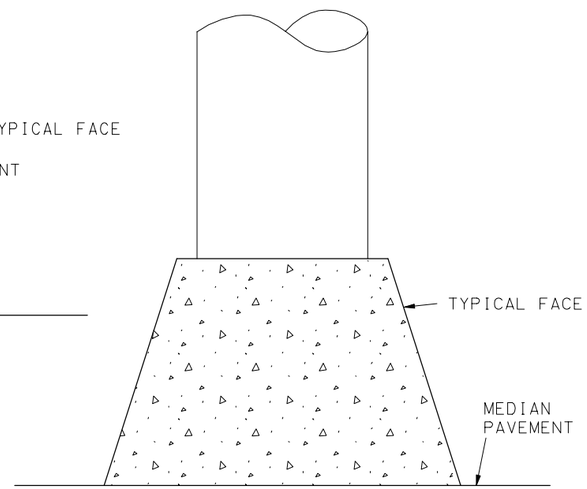

SEE SECTION C-C FOR DIMENSIONS

SECTION B-B

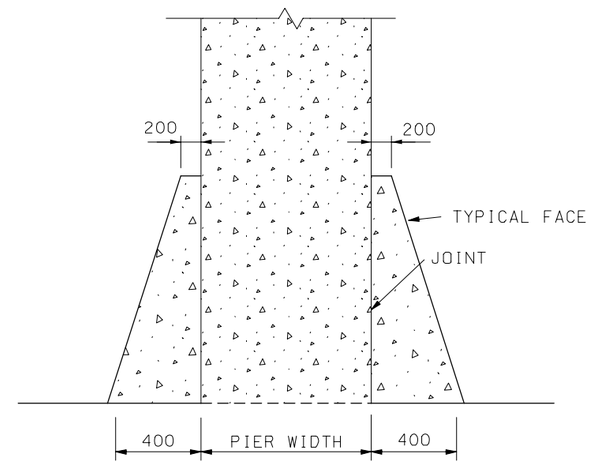

SECTION C-C

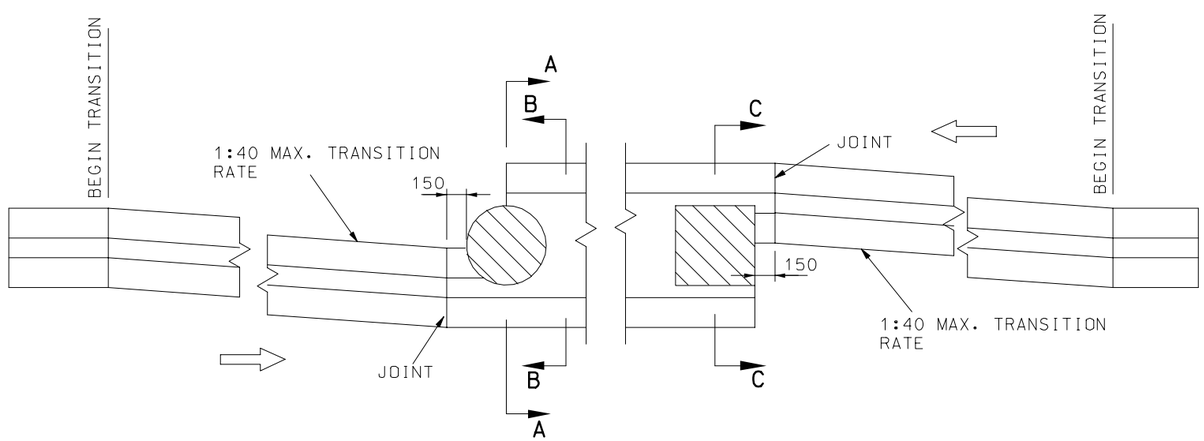

PLAN

TRANSITION DETAILS FOR PIER PROTECTION

GENERAL NOTES:

ALL DIMENSIONS SHOWN ARE IN mm UNLESS OTHERWISE NOTED.

JOINT SHALL BE TWO LAYERS OF 1.55 kg SMOOTH ROLL ROOFING TO FORM JOINT BETWEEN PIER AND BARRIER IN SEISMIC AREAS, A 25 mm JOINT WITH HOINT FILLER AND SEALER SHALL BE USED.

MISSOURI HIGHWAYS AND TRANSPORTATION COMMISSION

PERMANENT CONCRETE TRAFFIC BARRIER

TYPE C

DATE:_____ EFFECTIVE: 07-01-2004 **M617.10C** 5/7

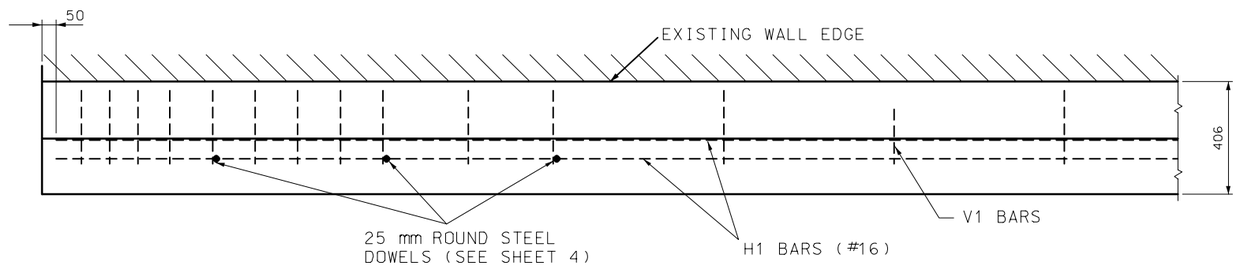

PLAN VIEW

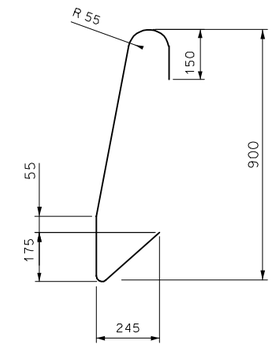

V1 BAR (#13)

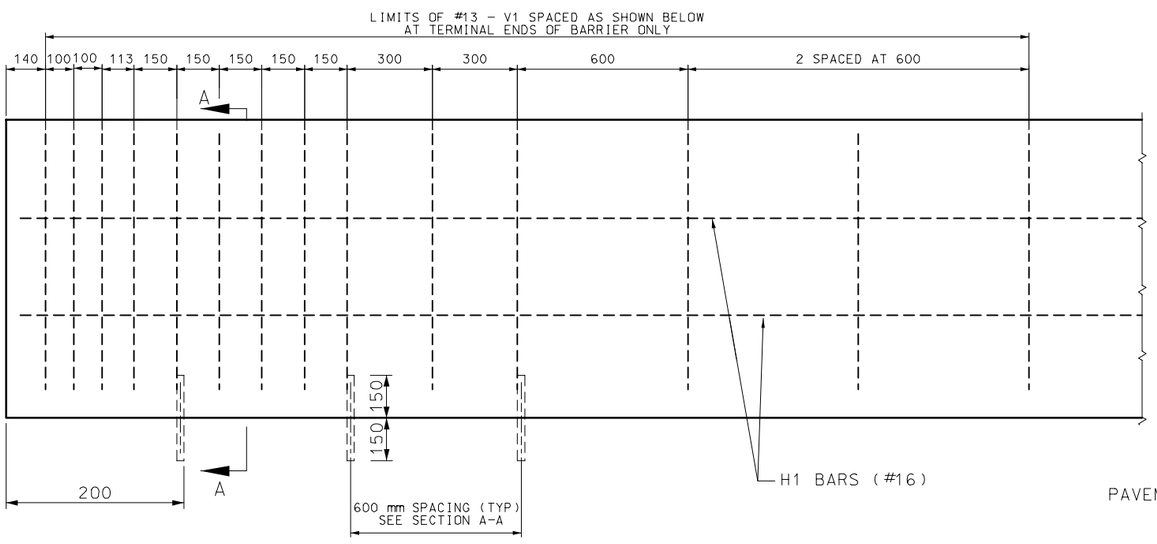

ELEVATION

REINFORCING DETAILS

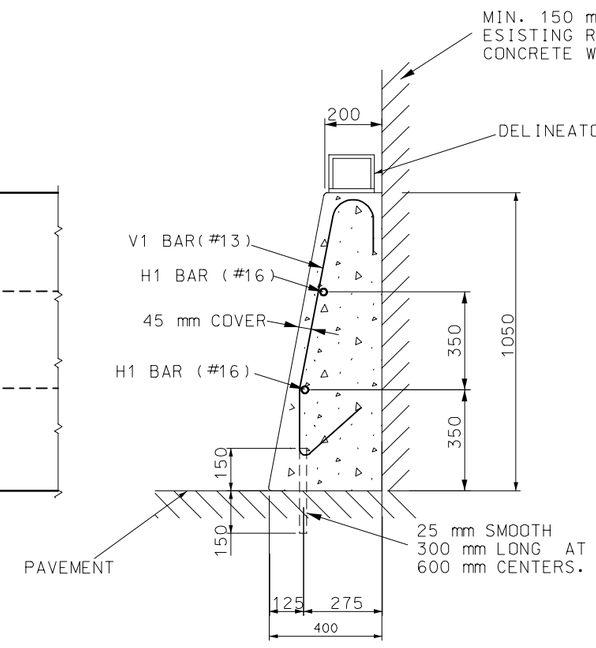

SECTION A-A

NOTES:

ALL DIMENSIONS SHOWN IN mm UNLESS OTHERWISE NOTED.

BAR SPLICES SHALL BE A MINIMUM OF 24 TIMES THE NOMINAL DIAMETER OF THE BAR.

ANY METHOD DEVISED BY THE CONTRACTOR AND APPROVED BY THE ENGINEER THAT WILL ASSURE THE LONGITUDINAL REINFORCING STEEL WILL BE POSITIONED ± 13 mm AS DIMENSIONED WILL BE SATISFACTORY.

THE CONTRACTOR HAS THE OPTION TO SLIP-FORM THE BARRIER. IN WHICH CASE, ADDITIONAL REINFORCEMENT MAY BE TIED TO THE UPPER TWO-THIRDS OF THE REINFORCING CAGE TO PROVIDE BRACING.

THIS BARRIER SHALL NOT BE USED TO SUPPORT HIGHWAY LIGHTING POLES.

THIS BARRIER SHALL NOT BE USED FOR BRIDGE ROADWAY APPLICATIONS.

SAWED JOINTS SHALL BE LOCATED AT PAVEMENT TRANSVERSE JOINTS.

TYPE D SHALL BE USED ONLY AT LOCATIONS SHOWN ON PLANS.

FOR DELINEATOR DETAILS, SEE SHEET 1.

MISSOURI HIGHWAYS AND TRANSPORTATION COMMISSION

PERMANENT CONCRETE TRAFFIC BARRIER

TYPE D

DATE:_____ EFFECTIVE: 07-01-2004 **M617.10C** 6/7

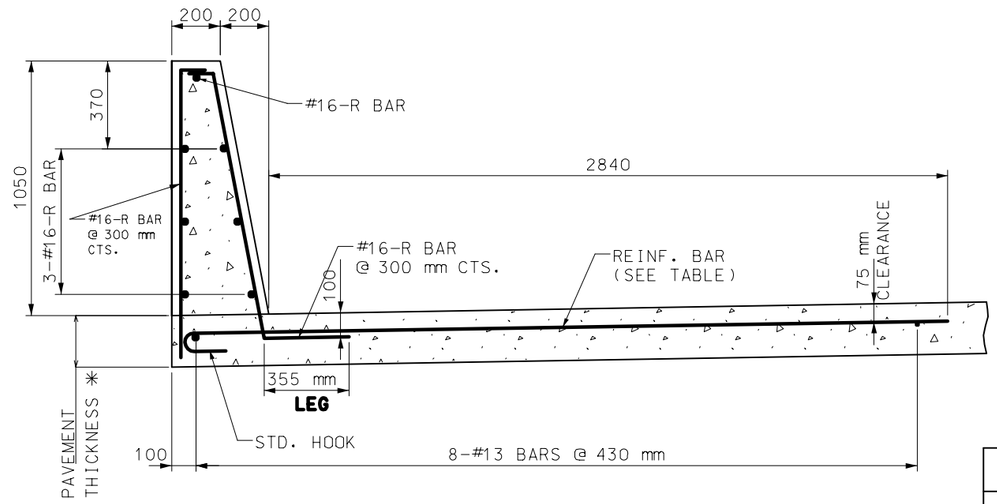

PART SECTION THRU PAVEMENT

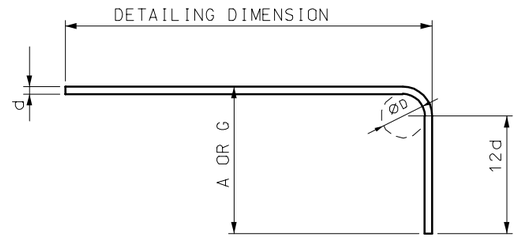

90° HOOKS

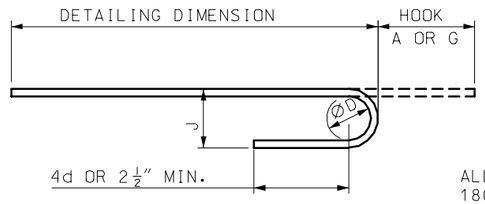

180° HOOKS

END HOOK DIMENSIONS				
BAR SIZE	D	ALL GRADES		
		180° HOOKS		90° HOOKS
	(mm)	A OR G	J	A OR G
#3	56	125	75	150
#4	75	125	100	200
#5	83	175	125	250
#6	112	200	150	300
#7	131	250	175	350
#8	150	275	200	450
#9	137	475	293	475
#10	268	425	331	550
#11	30	475	368	600
#14	456	675	543	775

ALL STANDARD HOOKS AND BENDS OTHER THAN 180° TO BE BENDT WITH THE SAME PROCEDURE AS FOR 90° STANDARD HOOKS.

TABLE OF TRANSVERSE PAVEMENT REINFORCEMENT	
PAVEMENT THICKNESS ✳✳	BAR SIZE & SPACING
250 mm	#19 @ 225 mm
275 mm	#16 @ 200 mm
≥ 350 mm	#16 @ 275 mm

NOTES:

MINIMUM CLEARANCE TO REINFORCING STEEL SHALL BE 40 mm, UNLESS OTHERWISE SHOWN.

✳✳ SEE ROADWAY PAVEMENT DESIGN.

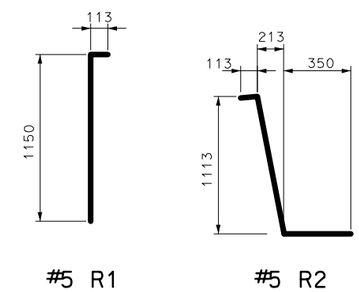

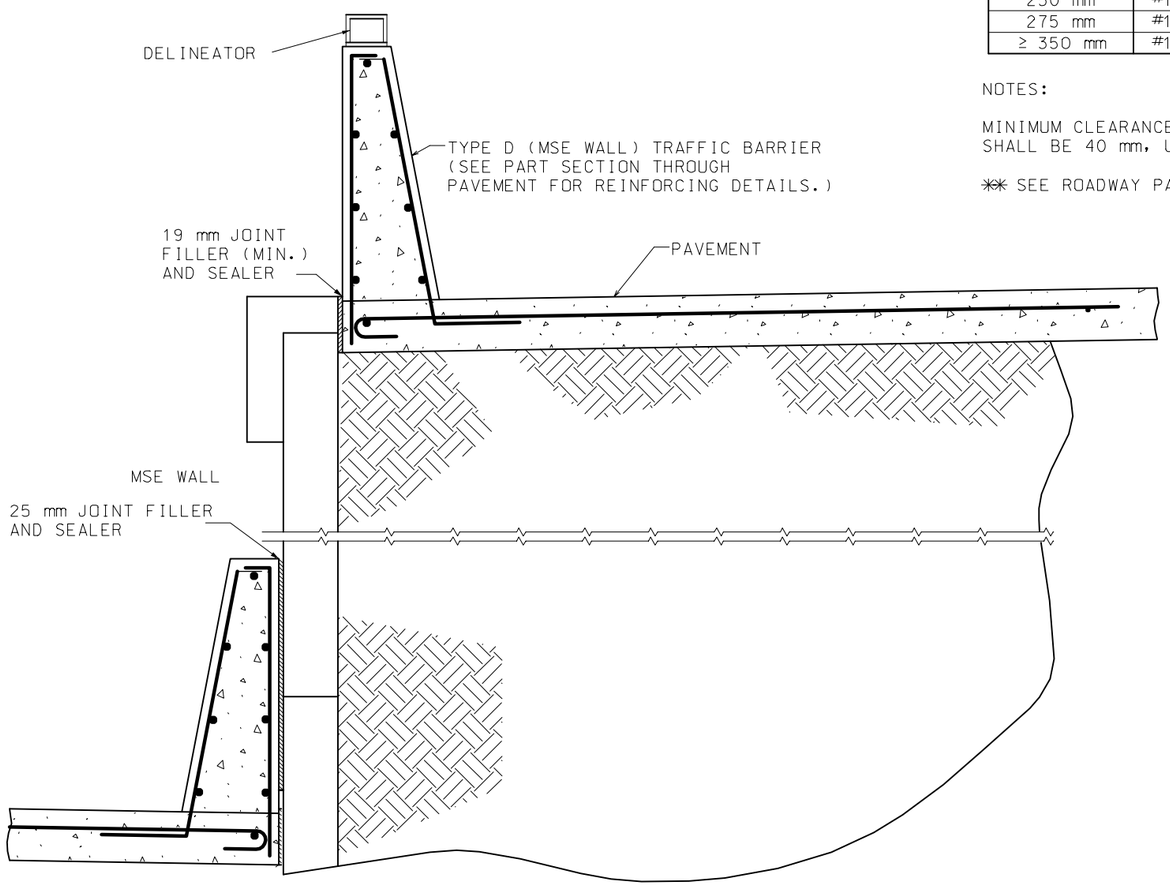

TYPE D (MSE WALL) TRAFFIC BARRIER ON TOP OF MSE WALL

NOTES:

ALL DIMENSIONS GIVEN ARE mm UNLESS OTHERWISE NOTED.

TYPE D (MODIFIED) SHALL BE USED ONLY AT LOCATIONS SHOWN ON PLANS.

FOR DELINEATOR DETAILS, SEE SHEET 1.

MISSOURI HIGHWAYS AND TRANSPORTATION COMMISSION

PERMANENT CONCRETE TRAFFIC BARRIER
TYPE D (MSE WALL)

DATE:_____ | EFFECTIVE: 07-01-2004 | **M617.10C** | 7/7