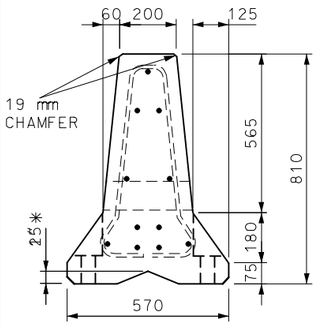

SECTION B-B
* V-NOTCH OPTIONAL

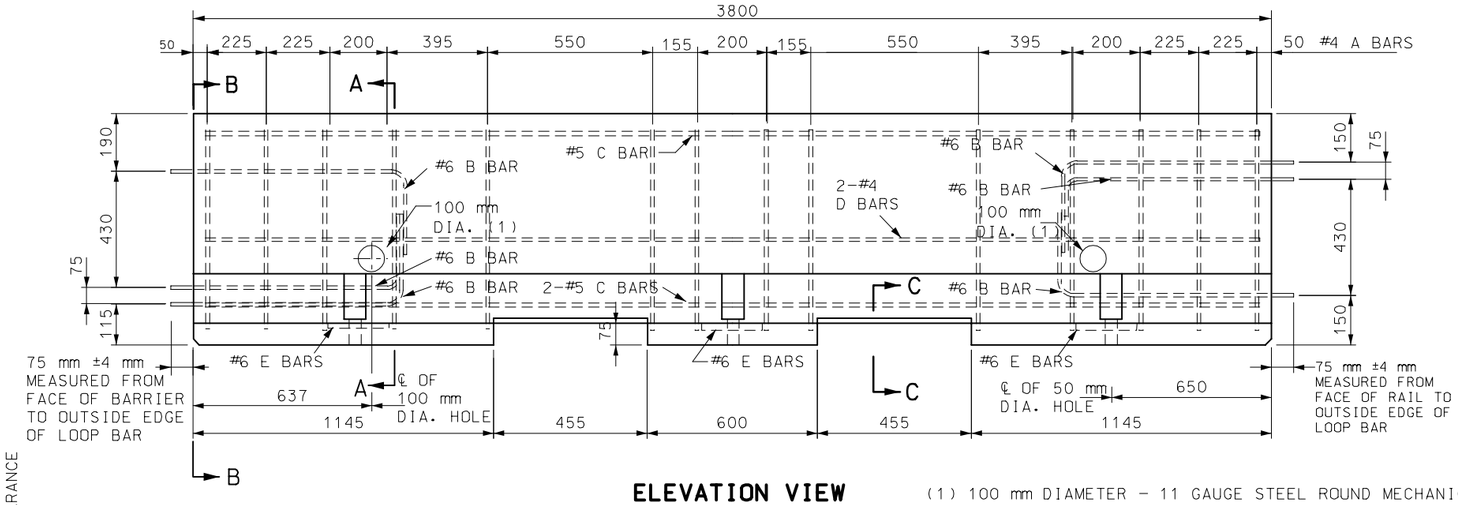

ELEVATION VIEW

(1) 100 mm DIAMETER - 11 GAUGE STEEL ROUND MECHANICAL TUBING SLEEVE. THESE HOLES ARE OPTIONAL.

PART SECTION C-C
LIFTING SLOT DETAIL
* RADIUS EDGER TO PREVENT SPALLING

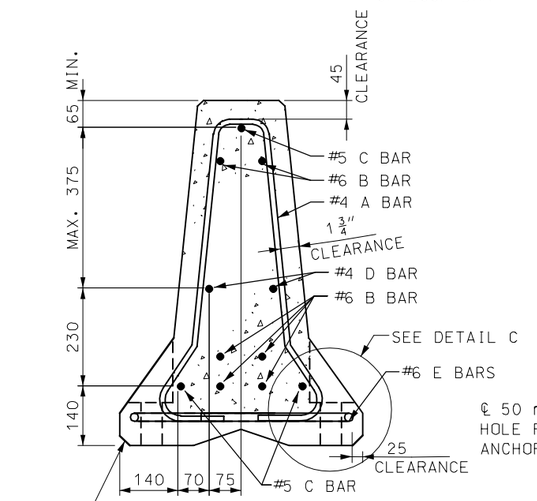

SECTION A-A
STIRRUP PLACEMENT WITH BAR REINFORCEMENT

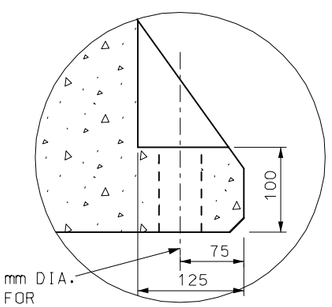

DETAIL C

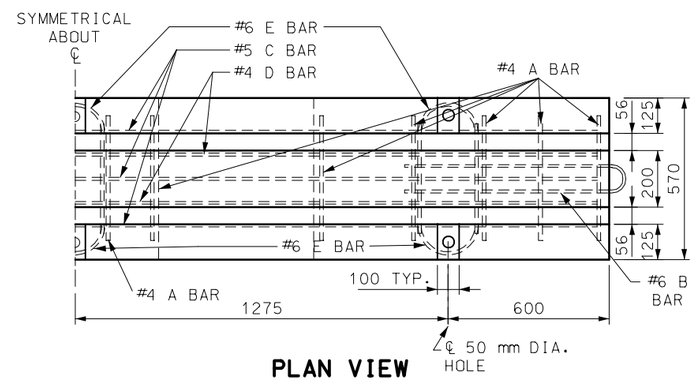

PLAN VIEW

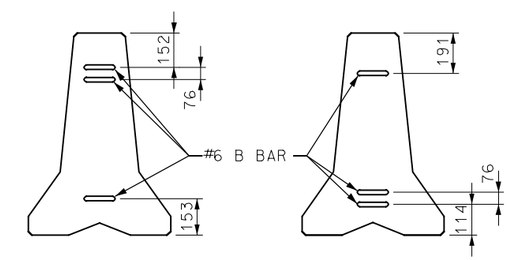

ALTERNATING END VIEWS FOR BARRIER LOOP CONNECTION

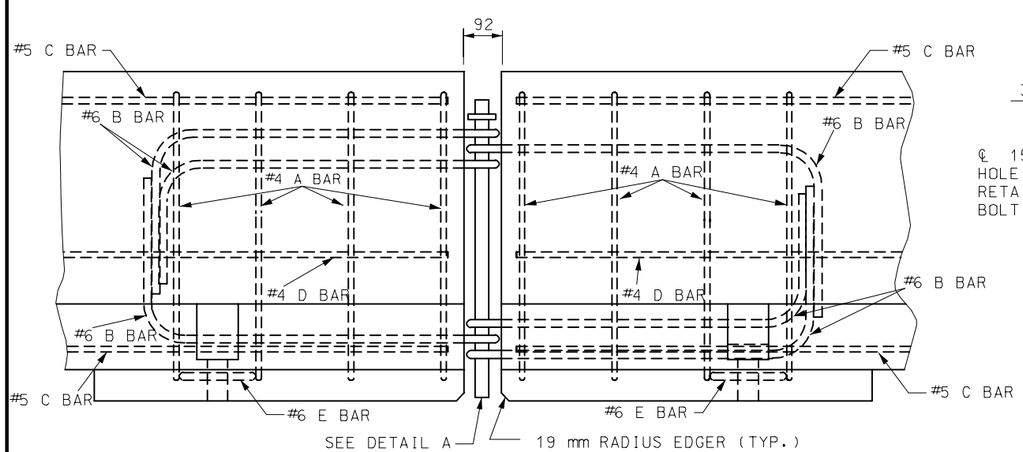

DETAILS OF BARRIER CONNECTION

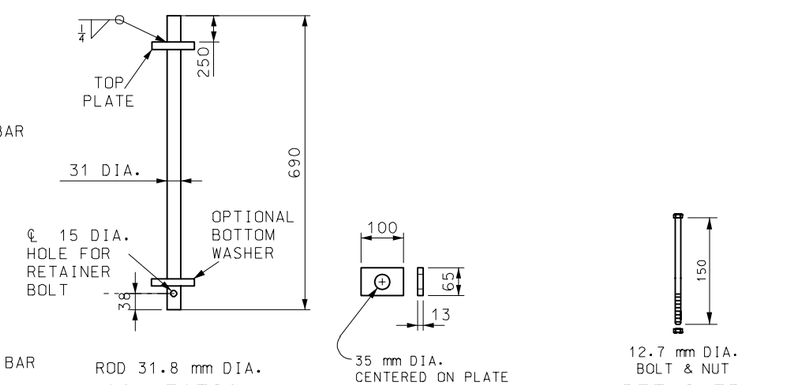

CONNECTION ROD (A36)

TOP PLATE & BOTTOM WASHER (A36)

RETAINER BOLT AND NUT (SAE GRADE 8)

NOTE: RETAINER BOLT AND BOTTOM WASHER AT CONTRACTOR'S OPTION.

DETAIL A
CONNECTION ROD ASSEMBLY

GENERAL NOTES:

ALL DIMENSIONS ARE nn UNLESS OTHERWISE NOTED.

AKK REUBFIRCUBG SGAKK NEET REQUIREMENTS OF CRSI EXCEPT WHERE SHOWN ON PLANS.

REINFORCING STEEL CLEARANCE TO EDGE OF CONCRETE SHALLBE 44 mm UNLESS OTHERWISE SHOWN

AT NO TIME SHALL THE BARRIERS BE LIFTED OR MOVED BY USE OF THE LOOP BARS.

THE SECTION FURNISHED SHALL COMPLY WITH DIMENSIONS SHOWN, AS APPROVED BY THE ENGINEER.

SEE SHEET 3 FOR DELINEATOR DETAILS.

MISSOURI HIGHWAYS AND TRANSPORTATION COMMISSION

TEMPORARY CONCRETE TRAFFIC BARRIER
TYPE F

DATE:_____ | EFFECTIVE: 07-01-2004 | **M617.20B** | 1/6

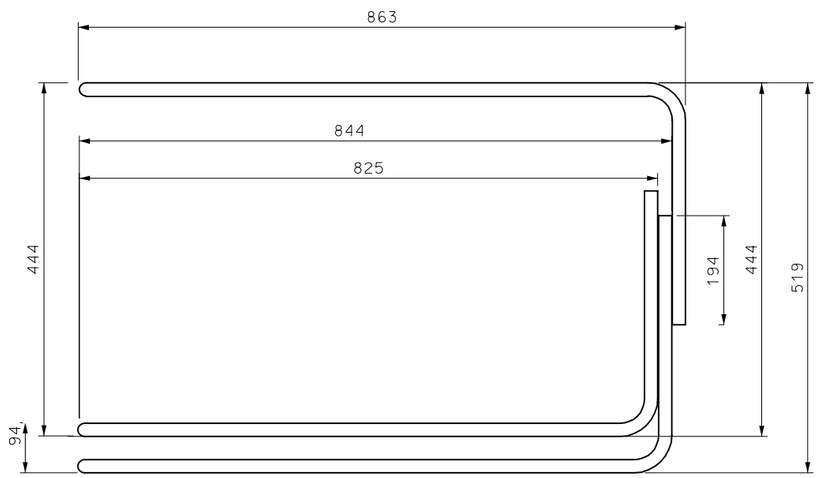

#19 B BAR ELEVATION

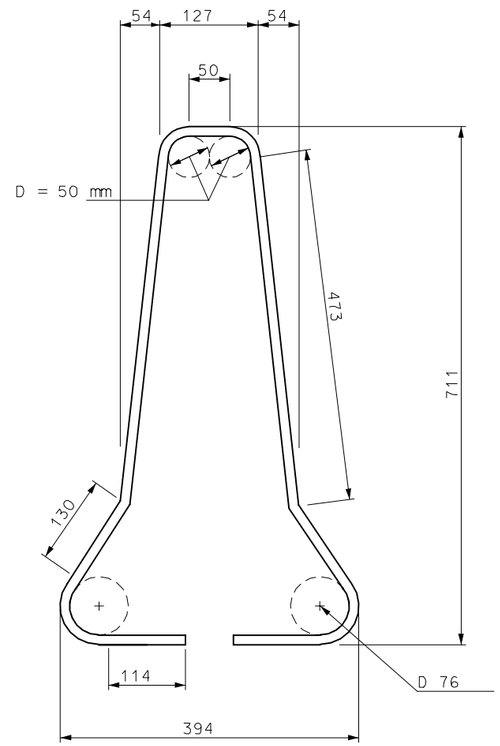

#13 A BARS

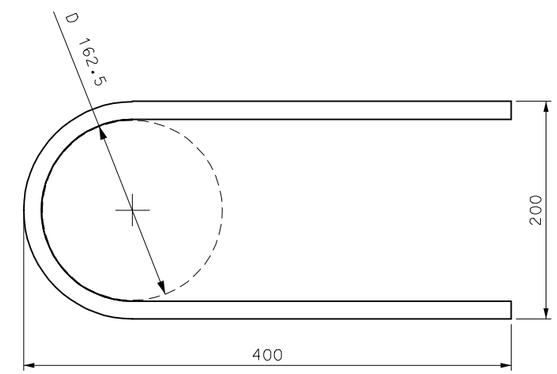

#19 E BAR

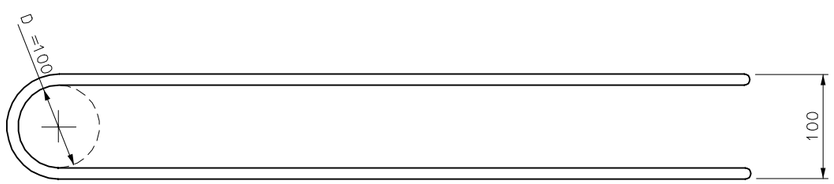

#19 B BAR PLAN

REINFORCING BARS PER 3800 mm BARRIER SECTION					
MARK	DIA. (MM)	NO. OF BARS	SHAPE OF EACH	LENGTH EACH (mm)	MASS
	12.7	14		1711	18.7 kg
	15.875	3		3750	17.5 kg
	12.7	2		3750	7.5 kg
E	19.05	6		875	11.9 kg
LOOP ASSEMBLY					
	19.05			2286	10.3 kg

CONCRETE VOLUME 0.9 m^3 APPROXIMATE MASS 2345 kg

GENERAL NOTES:

ALL DIMENSIONS SHOWN ARE IN mm UNLESS OTHERWISE NOTED.

DIMENSIONS ARE OUT TO OUT OF BARS UNLESS OTHERWISE NOTED.

MISSOURI HIGHWAYS AND TRANSPORTATION COMMISSION

TEMPORARY CONCRETE TRAFFIC BARRIER
TYPE F

DATE:_____ EFFECTIVE: 07-01-2004 **M617.20B** 2/6

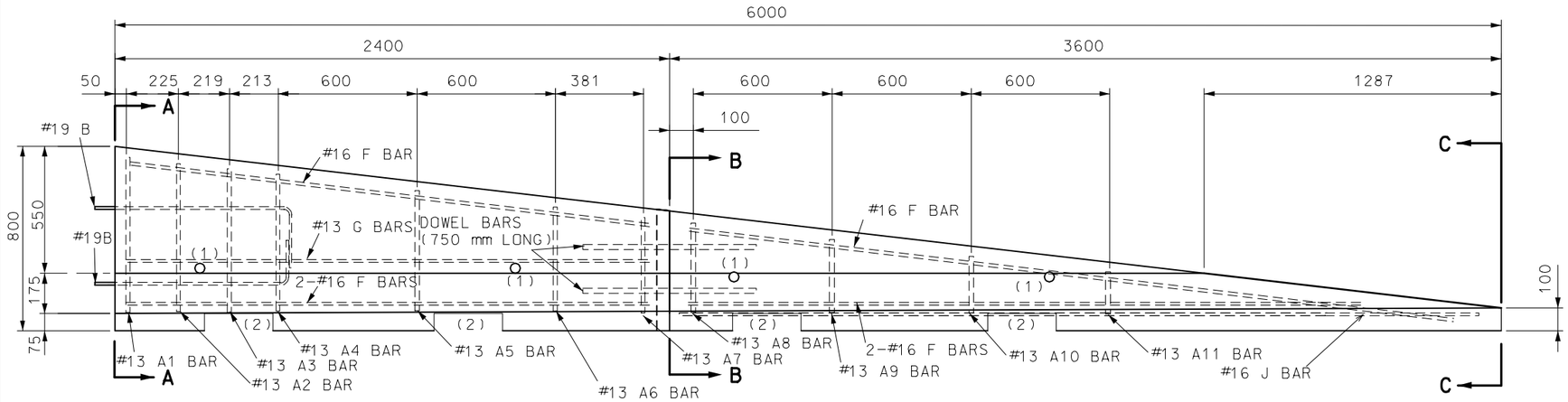

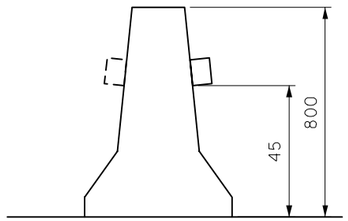

TRAFFIC BARRIER DELINEATORS

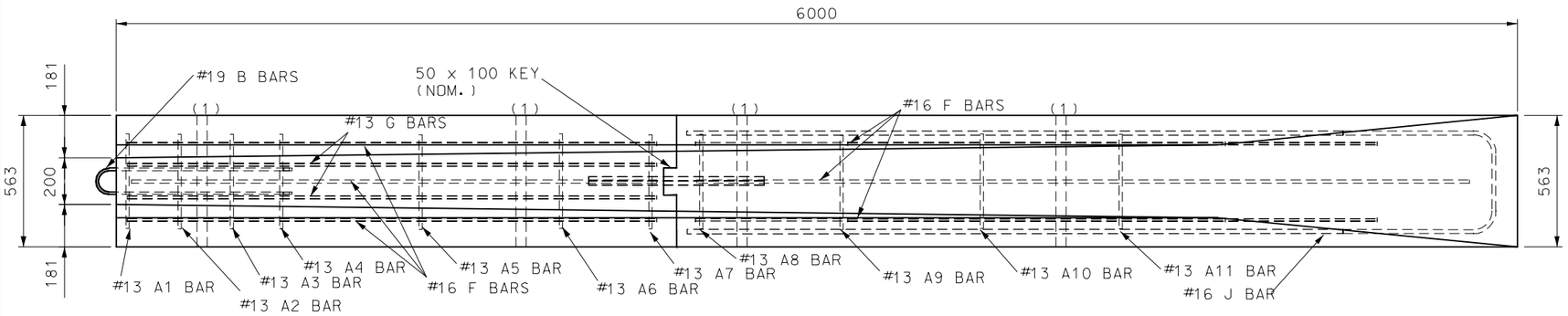

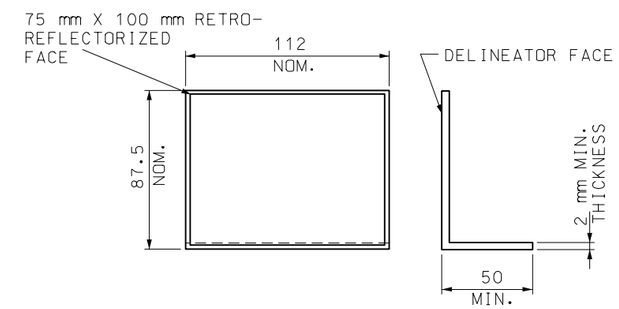

DELINEATOR

PRECAST BARRIER HEIGHT TRANSITION
(TEMPORARY INSTALLATIONS ONLY)

(1) OPTIONAL 100 mm DIAMETER, 11 GUAGE STEEL ROUND MECHANICAL TUBING SLEEVE FOR LIFT HOLE ALLOWED. THE LOCATION OF THE HOLE MAY VARY TO ACCOMMODATE THE DIFFERING WEIGHT DISTRIBUTIONS OF TRANSITION SECTIONS.

GENERAL NOTES:

ALL DIMENSIONS SHOWN ARE IN mm UNLESS OTHERWISE NOTED.

HEIGHT TRANSITIONS SHALL NOT BE USED ON INTERSTATE ROUTES OR IN LOCATIONS WHERE THE POSTED SPEED PRIOR TO CONSTRUCTION IS GREATER THAN 56 KPH.

AT NO TIME SHALL THE BARRIERS BE LIFTED OR MOVED BY USE OF THE LOOP BARS.

RETAINER BOLT AND NUT MUST BE USED WITH TRANSITION BARRIER.

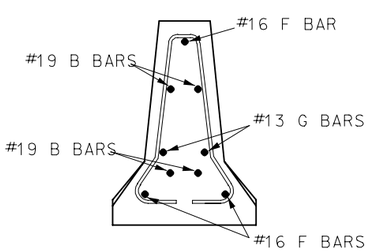

SECTION A-A

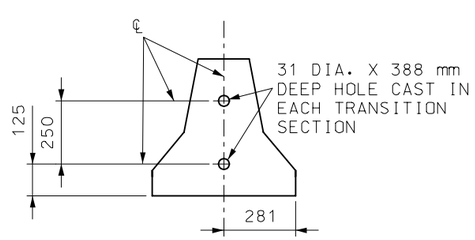

SECTION B-B

NOTE: SECTIONS TO BE CONNECTED WITH 2- 100 mm DIA. BARS OR #8 REINFORCING BARS 750 mm LONG IN 6.25 mm DIA. HOLES AS SHOWN.

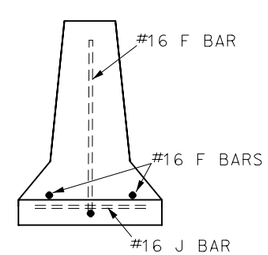

SECTION C-C

MISSOURI HIGHWAYS AND TRANSPORTATION COMMISSION

TEMPORARY CONCRETE TRAFFIC BARRIER

TYPE F HEIGHT TRANSITIONS

DATE:_____ EFFECTIVE: 07-01-2004 **M617.20B** 3/6

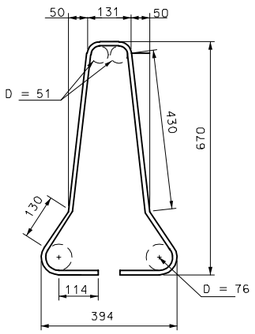

#13 A1 BAR

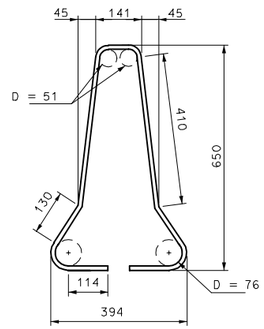

#13 A2 BAR

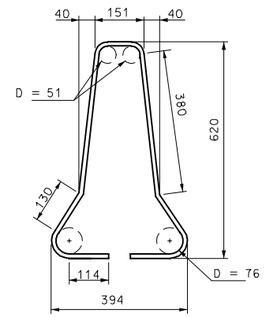

#13 A3 BAR

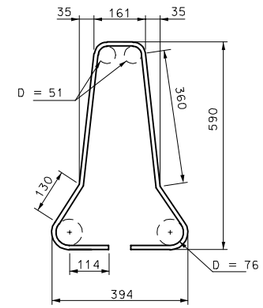

#13 A4 BAR

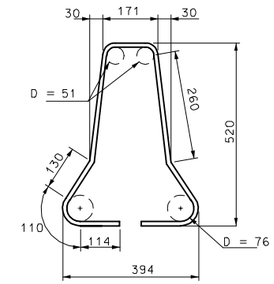

#13 A5 BAR

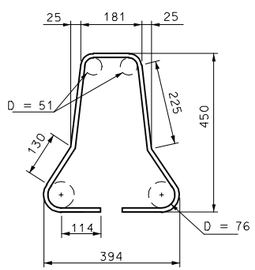

#13 A6 BAR

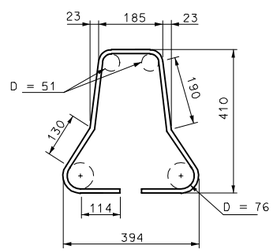

#13 A7 BAR

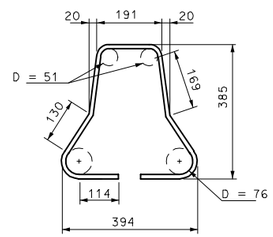

#13 A8 BAR

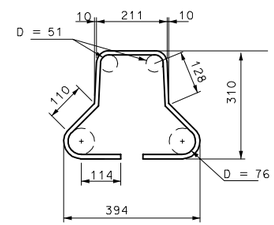

#13 A9 BAR

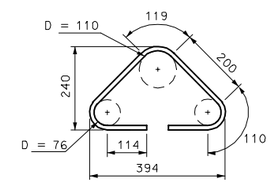

#13 A10 BAR

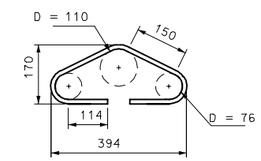

#13 A11 BAR

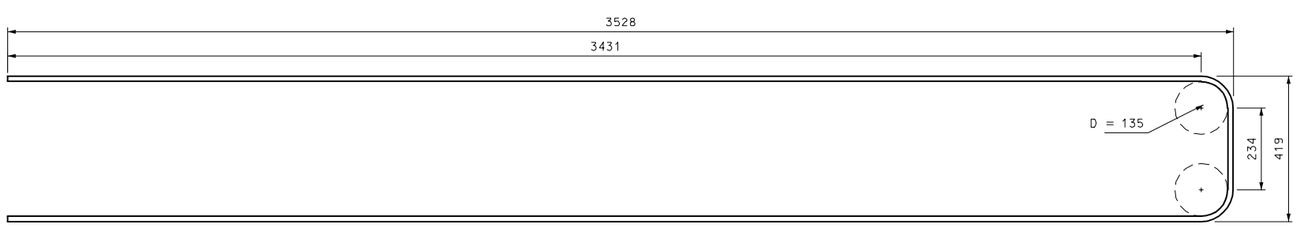

#16 J BAR

NOTE: FOR DETAILS OF B BARS, SEE SHEET 2 OF 4.

GENERAL NOTES:

ALL DIMENSIONS SHOWN ARE IN mm UNLESS OTHERWISE NOTED.

DIMENSIONS ARE OUT TO OUT OF BARS UNLESS OTHERWISE NOTED.

MISSOURI HIGHWAYS AND TRANSPORTATION COMMISSION

TEMPORARY CONCRETE TRAFFIC BARRIER

TYPE F HEIGHT TRANSITIONS

DATE:_____ EFFECTIVE: 07-01-2004 **M617.20B** 4/6

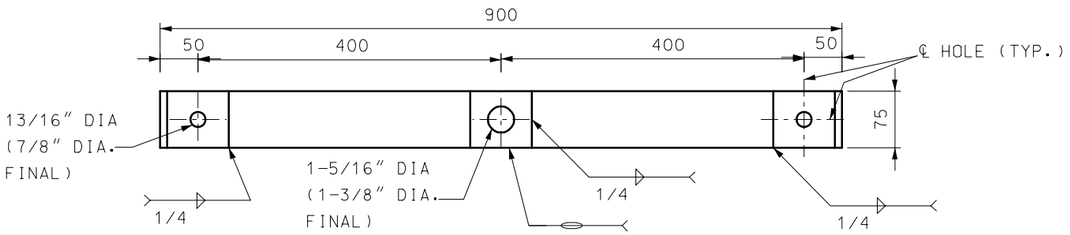

PLAN OF TIE-DOWN STRAP

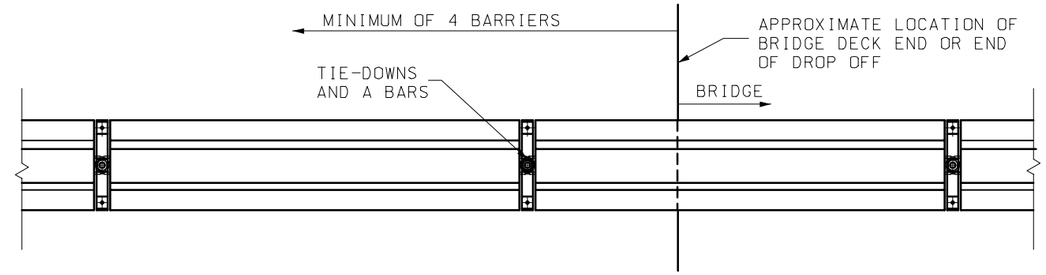

PLAN OF TRANSITION FOR FREE-STANDING BARRIER
TO TIE-DOWN BARRIER

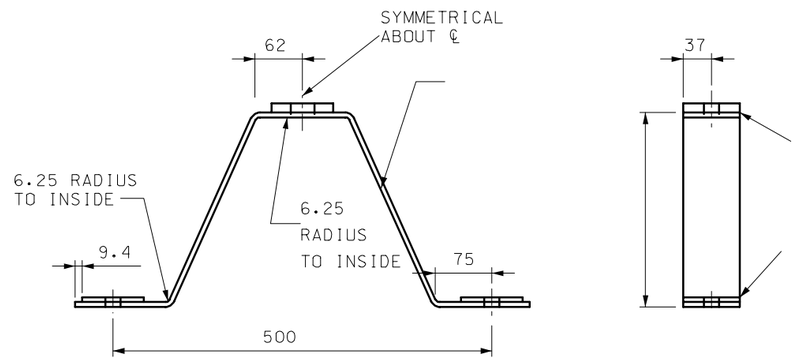

SIDE VIEW

DETAILS OF TYPE F TEMPORARY BARRIER TIE-DOWN STRAP

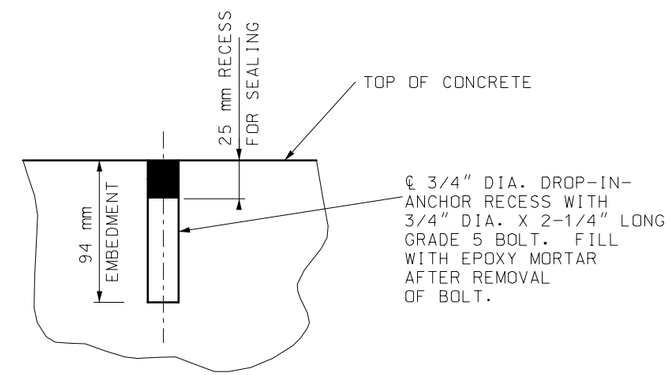

DETAIL SHOWING SEALING OF HOLES
AFTER REMOVAL OF TIE-DOWN BOLTS

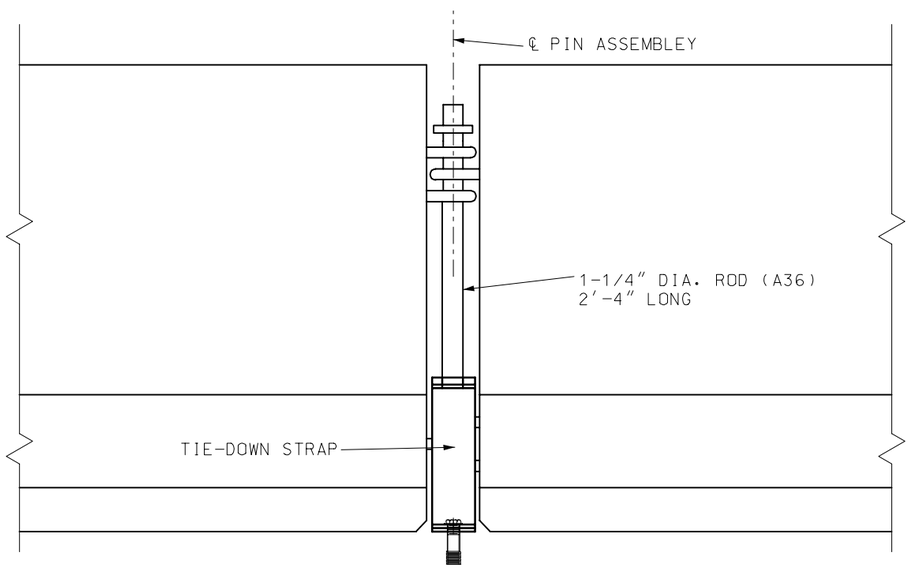

PART ELEVATION OF TEMPORARY BARRIER

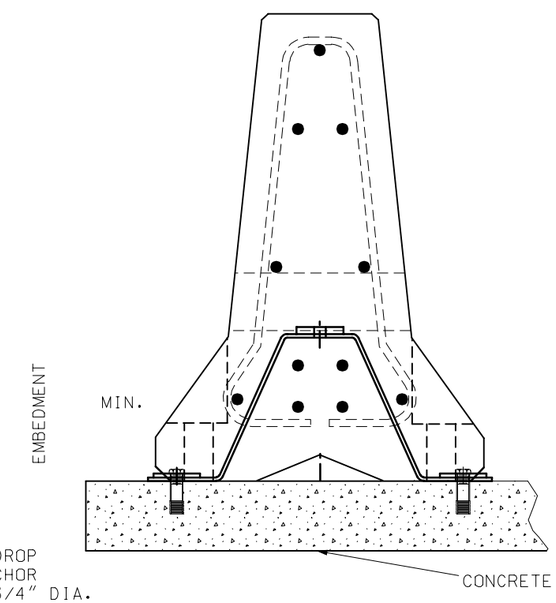

3/4" DROP
IN ANCHOR
WITH 3/4" DIA.
X 2-1/4" LONG
GRADE 5 BOLT

SECTION NEAR PIN ASSEMBLY

TIE-DOWN STRAP

MISSOURI HIGHWAYS AND TRANSPORTATION COMMISSION

TEMPORARY CONCRETE TRAFFICE BARRIER
TIE-DOWN STRAP

DATE:_____ | EFFECTIVE: 07-01-2004 | **M617.20B** | 5/6

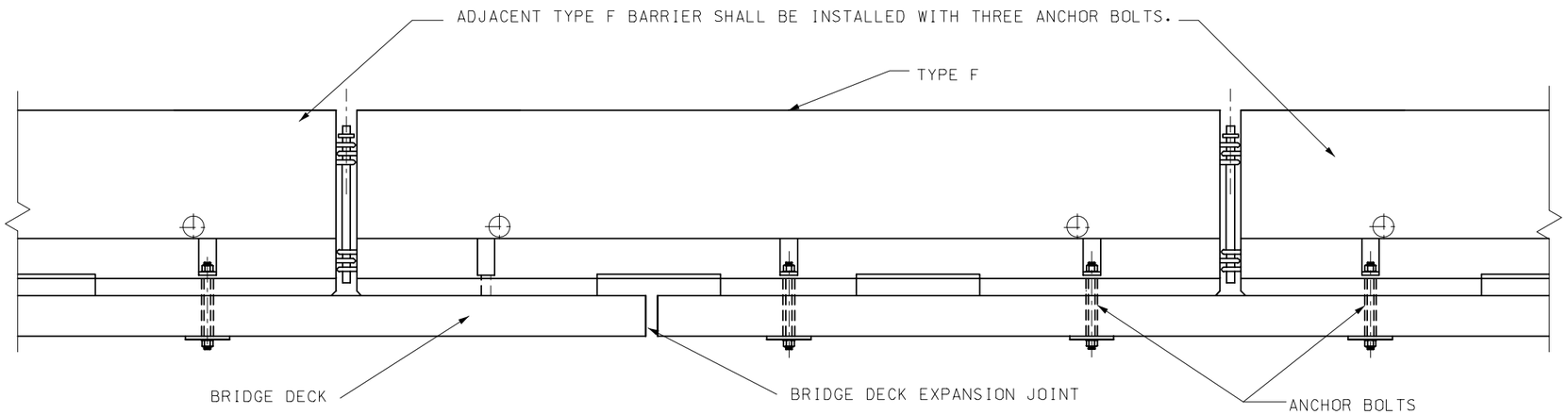

BOLT THROUGH DECK AT THERMAL EXPANSION JOINTS

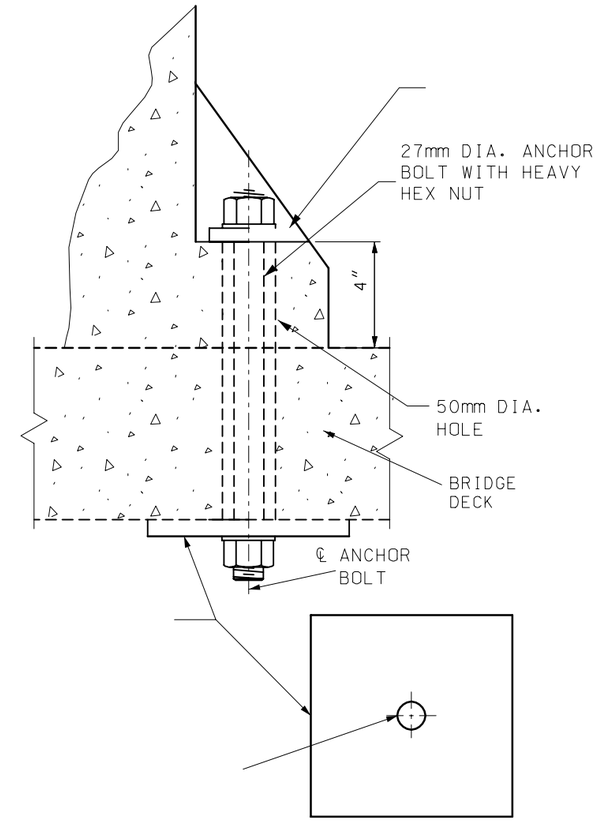

BOLT THROUGH DECK DETAIL

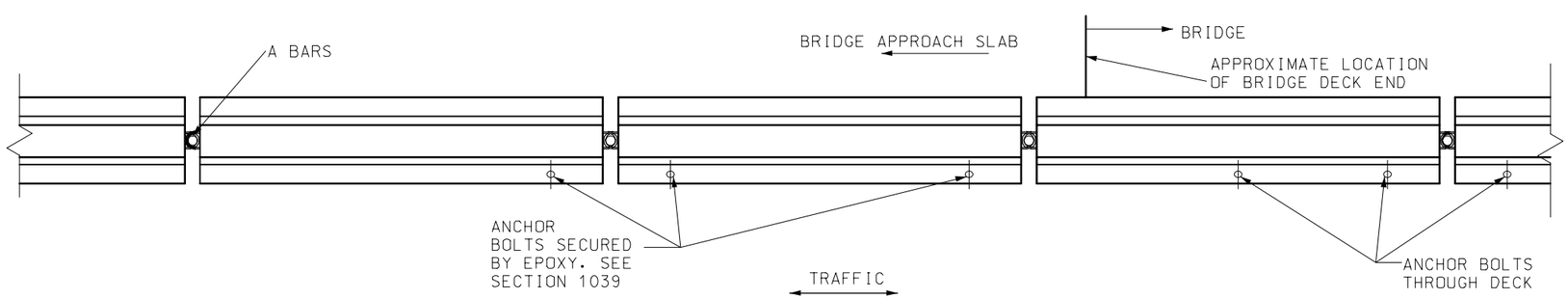

PLAN OF TRANSITION FOR BRIDGE DECK FROM FREE-STANDING TYPE F TO TYPE F WITH ANCHOR BOLT

GENERAL NOTES:

ALL DIMENSIONS SHOWN ARE IN mm UNLESS OTHERWISE NOTED.

MISSOURI HIGHWAYS AND TRANSPORTATION COMMISSION

TEMPORARY CONCRETE TRAFFIC BARRIER

ANCHORING SYSTEMS

DATE:_____	EFFECTIVE: 07-01-2004	M617.20B	6/6