	DESIGN FILL	MEMBER THICKNESSES			Span (S) = 1.2 m																												"C" Multiplier	"K" Multiplier	
					HT (m) = 1.2 or 1.5																														
					TOP SLAB BARS								BOTTOM SLAB BARS								WALL BARS					COEFFICIENTS (see note)									
		TS	BS	TX	A1	Bars	J3	Bars					A2	Bars	J4	Bars					B2	Bars		F	Bars	J4			J3					S = 1.2 m	HT = 1.2 m	HT = 1.5 m
	(mm)	Thick	Thick.	Thick	Size	c to c	Size	c to c					Size	c to c	Size	c to c					G1	Size	c to c	Size	c to c	K3	C4		K2	C1				mm	mm	mm
MS18	225	275	200	200	13	200	13	280					13	180	13	300					300	16	300	13	350	0.87	0.53		0.46	0.70				1400	1550	1850
MS18	800	200	200	200	13	300	13	300					13	240	13	300					300	16	300	13	350	0.91	0.50		0.44	0.56				1400	1475	1775
MS18	1300	200	200	200	13	300	13	300					13	300	13	300					0	16	300	13	350	0.91	0.49		0.44	0.52				1400	1475	1775
MS18	1800	200	200	200	13	300	13	300					13	300	13	300					0	16	300	13	350	0.91	0.48		0.44	0.49				1400	1475	1775
MS18	2300	200	200	200	13	300	13	300					13	300	13	300					0	16	300	13	350	0.91	0.47		0.44	0.48				1400	1475	1775
MS18 MOD	200	300	225	200	13	160	13	250					13	160	13	300					300	16	300	13	350	0.87	0.54		0.46	0.70				1400	1600	1875
MS18 MOD	800	200	200	200	13	270	13	300					13	200	13	300					300	16	300	13	350	0.91	0.50		0.44	0.56				1400	1475	1775
MS18 MOD	1300	200	200	200	13	300	13	300					13	300	13	300					0	16	300	13	350	0.91	0.49		0.44	0.52				1400	1475	1775
MS18 MOD	1800	200	200	200	13	300	13	300					13	300	13	300					0	16	300	13	350	0.91	0.48		0.44	0.49				1400	1475	1775
MS18 MOD	2300	200	200	200	13	300	13	300					13	300	13	300					0	16	300	13	350	0.91	0.47		0.44	0.48				1400	1475	1775
MS18 or MS18 MOD	2800	200	200	200	13	300	13	300					13	300	13	300					0	16	300	13	350	0.91	0.46		0.44	0.47				1400	1475	1775
MS18 or MS18 MOD	3300	200	200	200	13	300	13	300					13	300	13	300					0	16	300	13	350	0.91	0.46		0.44	0.47				1400	1475	1775
MS18 or MS18 MOD	3800	200	200	200	13	300	13	300					13	300	13	300					0	16	300	13	350	0.91	0.45		0.44	0.46				1400	1475	1775
MS18 or MS18 MOD	4300	200	200	200	13	300	13	300					13	300	13	300					0	16	300	13	350	0.91	0.45		0.44	0.46				1400	1475	1775
MS18 or MS18 MOD	4800	200	200	200	13	300	13	300					13	270	13	300					0	16	300	13	350	0.91	0.45		0.44	0.45				1400	1475	1775
MS18 or MS18 MOD	5300	200	200	200	13	300	13	300					13	250	13	300					0	16	300	13	350	0.91	0.45		0.44	0.45				1400	1475	1775
MS18 or MS18 MOD	5800	200	200	200	13	300	13	300					13	230	13	300					0	16	300	13	350	0.91	0.45		0.44	0.45				1400	1475	1775
MS18 or MS18 MOD	6300	200	225	200	13	280	13	300					13	210	13	300					0	16	300	13	350	0.91	0.45		0.44	0.45				1400	1475	1800
MS18 or MS18 MOD	6800	200	225	200	13	270	13	300					13	220	13	300					0	16	300	13	350	0.91	0.44		0.43	0.45				1400	1500	1800
MS18 or MS18 MOD	7300	200	225	200	13	250	13	300					13	210	13	300					0	16	300	13	350	0.91	0.44		0.43	0.45				1400	1500	1800
MS18 or MS18 MOD	7800	200	225	200	13	230	13	280					13	200	13	300					0	16	300	13	350	0.91	0.44		0.43	0.45				1400	1500	1800
MS18 or MS18 MOD	8300	200	225	200	13	220	13	270					13	180	13	270					0	16	300	13	350	0.91	0.44		0.43	0.45				1400	1500	1800
MS18 or MS18 MOD	8800	200	250	200	13	210	13	250					13	170	13	280					0	16	300	13	350	0.91	0.44		0.43	0.45				1400	1500	1825
MS18 or MS18 MOD	9300	200	250	200	13	200	13	240					13	180	13	270					0	16	300	13	350	0.91	0.44		0.42	0.45				1400	1525	1825
MS18 or MS18 MOD	9800	200	250	200	13	190	13	230					13	170	13	250					0	16	300	13	350	0.91	0.44		0.42	0.45				1400	1525	1825

	DESIGN FILL	MEMBER THICKNESSES			SPAN (S) = 1.2 m																												"C" Multiplier	"K" Multiplier	
					HT (m) = 1.8 or 2.1																														
					TOP SLAB BARS								BOTTOM SLAB BARS								WALL BARS					COEFFICIENTS (see note)									
		TS	BS	TX	A1	Bars	J3	Bars					A2	Bars	J4	Bars					B2	Bars		F	Bars	J4			J3					S = 1.2 m	HT = 1.8 m	HT = 2.1 m
	(mm)	Thick	Thick.	Thick	Size	c to c	Size	c to c					Size	c to c	Size	c to c					G1	Size	c to c	Size	c to c	K3	C4		K2	C1				mm	mm	mm
MS18	225	275	200	200	13	190	13	280					13	160	13	300					300	16	300	13	350	0.90	0.73		0.34	0.70				1400	2150	2450
MS18	800	200	200	200	13	300	13	300					13	220	13	300					300	16	300	13	350	0.93	0.73		0.31	0.70				1400	2075	2375
MS18	1300	200	200	200	13	300	13	300					13	300	13	300					0	16	300	13	350	0.93	0.73		0.31	0.72				1400	2075	2375
MS18	1800	200	200	200	13	300	13	300					13	300	13	300					0	16	300	13	350	0.93	0.73		0.31	0.70				1400	2075	2375
MS18	2300	200	200	200	13	300	13	300					13	300	13	300					0	16	300	13	350	0.93	0.72		0.31	0.70				1400	2075	2375
MS18 MOD	225	275	225	200	16	240	13	280					16	220	13	300					300	16	300	13	350	0.90	0.73		0.33	0.70				1400	2175	2475
MS18 MOD	800	200	200	200	13	260	13	300					13	180	13	300					300	16	300	13	350	0.93	0.73		0.31	0.70				1400	2075	2375
MS18 MOD	1300	200	200	200	13	300	13	300					13	300	13	300					0	16	300	13	350	0.93	0.73		0.31	0.72				1400	2075	2375
MS18 MOD	1800	200	200	200	13	300	13	300					13	300	13	300					0	16	300	13	350	0.93	0.73		0.31	0.70				1400	2075	2375
MS18 MOD	2300	200	200	200	13	300	13	300					13	300	13	300					0	16	300	13	350	0.93	0.72		0.31	0.70				1400	2075	2375
MS18 or MS18 MOD	2800	200	200	200	13	300	13	300					13	300	13	300					0	16	300	13	350	0.93	0.67		0.31	0.70				1400	2075	2375
MS18 or MS18 MOD	3300	200	200	200	13	300	13	300					13	300	13	270					0	16	300	13	350	0.93	0.65		0.31	0.70				1400	2075	2375
MS18 or MS18 MOD	3800	200	200	200	13	300	13	300					13	300	13	240					0	16	300	13	350	0.93	0.64		0.31	0.75				1400	2075	2375
MS18 or MS18 MOD	4300	200	200	200	13	300	13	300					13	300	13	220					0	16	300	13	350	0.93	0.63		0.31	0.70				1400	2075	2375
MS18 or MS18 MOD	4800	200	200	200	13	300	13	280					13	280	13	200					0	16	300	13	350	0.93	0.62		0.31	0.66				1400	2075	2375
MS18 or MS18 MOD	5300	200	200	200	13	300	13	250					13	260	13	190					0	16	300	13	350	0.93	0.61		0.31	0.65				1400	2075	2375
MS18 or MS18 MOD	5800	200	200	200	13	300	13	240					13	240	13	180					0	16	300	13	350	0.93	0.61		0.31	0.64				1400	2075	2375
MS18 or MS18 MOD	6300	200	225	200	13	300	13	230					13	250	13	190					0	16	300	13	350	0.93	0.64		0.31	0.63				1400	2100	2400
MS18 or MS18 MOD	6800	200	225	225	13	300	13	270					13	240	13	200					0	16	300	13	350	0.93	0.59		0.31	0.58				1425	2100	2400
MS18 or MS18 MOD	7300	200	225	225	13	270	13	240					13	220	13	190					0	16	300	13	350	0.93	0.59		0.31	0.58				1425	2100	2400
MS18 or MS18 MOD	7800	200	225	225	13	260	13	230					13	210	13	180					0	16	300	13	350	0.93	0.59		0.31	0.57				1425	2100	2400
MS18 or MS18 MOD	8300	200	250	225	13	240	13	220					13	200	13	190					0	16	300	13	350	0.93	0.62		0.31	0.57				1425	2100	2425
MS18 or MS18 MOD	8800	200	250	250	13	240	13	230					13	210	13	200					0	16	300	13	350	0.93	0.57		0.30	0.55				1450	2125	2425
MS18 or MS18 MOD	9300	200	250	250	13	220	13	220					13	200	13	190					0	16	300	13	350	0.93	0.57		0.30	0.55				1450	2125	2425
MS18 or MS18 MOD	9800	200	250	250	13	210	13	210					13	190	13	190					0	16	300	13	350	0.93	0.57		0.30	0.54				1450	2125	2425

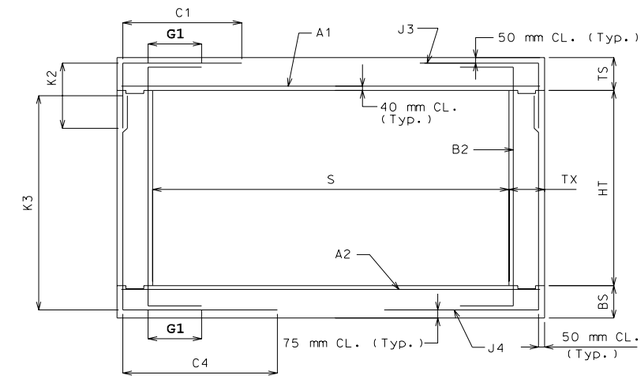

SECTION THRU BOX

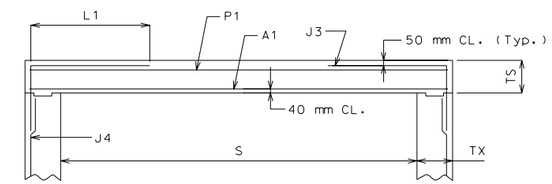

PART SECTION THRU BOX FOR MODIFIED J3 ALTERNATIVE
(B2 BAR NOT SHOWN FOR CLARITY)

NOTE: IF DESIGN FILL FALLS BETWEEN TABULATED FILLS, USE THE ADJACENT TABULATED FILL WHICH YIELDS THE GREATER MEMBER THICKNESS. IF THE MEMBER THICKNESSES ARE EQUAL, USE THE ADJACENT TABULATED FILL WHICH YIELDS THE GREATER AREA OF REINFORCEMENT.

SPECIAL DESIGNS ARE REQUIRED WHEN THE DESIGN FILL IS OUTSIDE THE RANGE OF TABULATED FILLS.

ALL DIMENSIONS ARE IN mm UNLESS OTHERWISE SPECIFIED.

COEFFICIENTS: DIMENSIONS MARKED WITH C# OR K# ARE THE PRODUCT OF THE COEFFICIENT AND ITS ASSOCIATED MULTIPLIER.

DESIGN FILL HEIGHT GIVEN IN THE TABLES IS THE HEIGHT FROM THE TOP OF THE EARTH FILL OR ROADWAY TO THE TOP OF THE TOP SLAB.

ALL CULVERTS MEET STRENGTH REQUIREMENTS FOR MILITARY 106 kN TANDEM AXLE LOADING.

AT CONTRACTOR'S OPTION, A MODIFIED J3 ALTERNATIVE MAY BE UTILIZED WHEN THE DISTANCE BETWEEN THE ENDS OF J3 BARS AT TOP SLAB IS LESS THAN 600 mm. J3 BARS WITH HORIZONTAL LENGTH L1 (Instead of C1) MUST BE USED, WHERE L1 IS EQUAL TO 450, 550, AND 700 mm FOR #13, #16, AND #19 BARS, RESPECTIVELY. ADDITIONAL P1 BAR IS REQUIRED WITH THE MODIFIED J3 ALTERNATIVE AND MUST BE OF THE SAME SIZE AND SPACING AS J3 BAR WITH A LENGTH EQUAL TO A1 BAR. NO ADDITIONAL PAYMENT WILL BE MADE FOR THIS SUBSTITUTION.

MISSOURI HIGHWAY AND TRANSPORTATION COMMISSION

CONCRETE SINGLE BOX CULVERT

MEMBER SIZES AND REINFORCEMENT

(MS18 & MS18 MOD LOADING)

DATE:	EFFECTIVE: 04-01-2002	M703.15C	1/13

	DESIGN FILL	MEMBER THICKNESSES			Span (S) = 1.5 m; HT (m) = 0.9																															
					TOP SLAB BARS								BOTTOM SLAB BARS								WALL BARS					COEFFICIENTS (see note)								"C" Multiplier	"K" Multiplier		
		TS	BS	TX	A1	Bars	J3	Bars					A2	Bars	J4	Bars					B2 Bars		F	Bars		J4			J3					S = 1.5 m	HT = 0.9 m		
	(mm)	Thick	Thick.	Thick	Size	c to c	Size	c to c					Size	c to c	Size	c to c					G1	Size	c to c	Size	c to c	K3	C4		K2	C1				mm	mm		
MS18	250	250	200	200	13	160	13	300					13	160	13	250					300	16	300	13	350	0.82	0.40		0.56	0.39				1700	1225		
MS18	800	200	200	200	13	260	13	300					13	230	13	300					300	16	300	13	350	0.86	0.38		0.55	0.39				1700	1175		
MS18	1300	200	200	200	13	300	13	300					13	300	13	300					0	16	300	13	350	0.86	0.37		0.55	0.38				1700	1175		
MS18	1800	200	200	200	13	300	13	300					13	300	13	300					0	16	300	13	350	0.86	0.36		0.55	0.37				1700	1175		
MS18	2300	200	200	200	13	300	13	300					13	290	13	300					0	16	300	13	350	0.86	0.36		0.55	0.36				1700	1175		
MS18 MOD	200	300	225	200	16	230	13	250					16	230	13	230					300	16	300	13	350	0.79	0.40		0.57	0.33				1700	1300		
MS18 MOD	800	200	200	200	13	220	13	300					13	190	13	300					300	16	300	13	350	0.86	0.38		0.55	0.40				1700	1175		
MS18 MOD	1300	200	200	200	13	300	13	300					13	270	13	300					0	16	300	13	350	0.86	0.37		0.55	0.38				1700	1175		
MS18 MOD	1800	200	200	200	13	300	13	300					13	280	13	300					0	16	300	13	350	0.86	0.36		0.55	0.37				1700	1175		
MS18 MOD	2300	200	200	200	13	300	13	300					13	270	13	300					0	16	300	13	350	0.86	0.36		0.55	0.36				1700	1175		
MS18 or MS18 MOD	2800	200	200	200	13	300	13	300					13	300	13	300					0	16	300	13	350	0.86	0.36		0.55	0.35				1700	1175		
MS18 or MS18 MOD	3300	200	200	200	13	300	13	300					13	280	13	300					0	16	300	13	350	0.86	0.35		0.55	0.35				1700	1175		
MS18 or MS18 MOD	3800	200	200	200	13	300	13	300					13	240	13	300					0	16	300	13	350	0.86	0.35		0.55	0.35				1700	1175		
MS18 or MS18 MOD	4300	200	200	200	13	280	13	300					13	220	13	300					0	16	300	13	350	0.86	0.35		0.55	0.35				1700	1175		
MS18 or MS18 MOD	4800	200	200	200	13	260	13	300					13	200	13	300					0	16	300	13	350	0.86	0.35		0.55	0.35				1700	1175		
MS18 or MS18 MOD	5300	200	225	200	13	240	13	300					13	200	13	300					0	16	300	13	350	0.86	0.33		0.53	0.35				1700	1200		
MS18 or MS18 MOD	5800	200	225	200	13	210	13	280					13	180	13	300					0	16	300	13	350	0.86	0.33		0.53	0.35				1700	1200		
MS18 or MS18 MOD	6300	200	225	200	13	200	13	250					13	170	13	300					0	16	300	13	350	0.86	0.33		0.53	0.35				1700	1200		
MS18 or MS18 MOD	6800	200	250	200	13	190	13	230					13	170	13	300					0	16	300	13	350	0.86	0.32		0.52	0.36				1700	1225		
MS18 or MS18 MOD	7300	200	250	200	13	170	13	220					13	160	13	300					0	16	300	13	350	0.86	0.32		0.52	0.36				1700	1225		
MS18 or MS18 MOD	7775	225	250	200	13	170	13	240					16	230	13	280					0	16	300	13	350	0.84	0.32		0.53	0.34				1700	1250		
MS18 or MS18 MOD	8275	225	250	200	13	160	13	230					16	220	13	270					0	16	300	13	350	0.84	0.32		0.53	0.34				1700	1250		
MS18 or MS18 MOD	8775	225	275	200	13	160	13	210					16	220	13	300					0	16	300	13	350	0.85	0.31		0.52	0.34				1700	1275		
MS18 or MS18 MOD	9275	225	275	200	16	230	13	200					16	210	13	280					0	16	300	13	350	0.85	0.31		0.52	0.34				1700	1275		
MS18 or MS18 MOD	9750	250	275	200	16	230	13	230					16	200	13	270					0	16	300	13	350	0.83	0.31		0.53	0.33				1700	1300		

	DESIGN FILL	MEMBER THICKNESSES			Span (S) = 1.5 m; HT (m) = 1.2 or 1.5 or 1.8																																
					TOP SLAB BARS								BOTTOM SLAB BARS								WALL BARS					COEFFICIENTS (see note)								"C" Multiplier	"K" Multiplier		
		TS	BS	TX	A1	Bars	J3	Bars					A2	Bars	J4	Bars					B2 Bars		F	Bars		J4			J3					S = 1.5 m	HT = 1.2 m	HT = 1.5 m	HT = 1.8 m
	(mm)	Thick	Thick.	Thick	Size	c to c	Size	c to c					Size	c to c	Size	c to c					G1	Size	c to c	Size	c to c	K3	C4		K2	C1				mm	mm	mm	mm
MS18	225	275	225	200	13	160	13	280					16	240	13	250					300	16	300	13	350	0.89	0.50		0.46	0.66				1700	1550	1875	2175
MS18	800	200	200	200	13	220	13	300					13	180	13	300					300	16	300	13	350	0.92	0.46		0.44	0.51				1700	1475	1775	2075
MS18	1300	200	200	200	13	300	13	300					13	260	13	300					0	16	300	13	350	0.92	0.44		0.44	0.47				1700	1475	1775	2075
MS18	1800	200	200	200	13	300	13	300					13	260	13	300					0	16	300	13	350	0.92	0.43		0.44	0.44				1700	1475	1775	2075
MS18	2300	200	200	200	13	300	13	300					13	250	13	300					0	16	300	13	350	0.92	0.42		0.44	0.43				1700	1475	1775	2075
MS18 MOD	200	300	250	200	16	220	13	250					16	200	13	240					300	16	300	13	350	0.88	0.50		0.46	0.66				1700	1625	1900	2200
MS18 MOD	800	200	200	200	13	190	13	300					16	240	13	300					300	16	300	13	350	0.92	0.46		0.44	0.51				1700	1475	1775	2075
MS18 MOD	1300	200	200	200	13	300	13	300					13	230	13	300					0	16	300	13	350	0.92	0.44		0.44	0.47				1700	1475	1775	2075
MS18 MOD	1800	200	200	200	13	300	13	300					13	240	13	300					0	16	300	13	350	0.92	0.43		0.44	0.44				1700	1475	1775	2075
MS18 MOD	2300	200	200	200	13	300	13	300					13	230	13	300					0	16	300	13	350	0.92	0.42		0.44	0.43				1700	1475	1775	2075
MS18 or MS18 MOD	2800	200	200	200	13	300	13	300					13	280	13	300					0	16	300	13	350	0.92	0.41		0.44	0.42				1700	1475	1775	2075
MS18 or MS18 MOD	3300	200	200	200	13	300	13	300					13	250	13	300					0	16	300	13	350	0.92	0.41		0.44	0.41				1700	1475	1775	2075
MS18 or MS18 MOD	3800	200	200	200	13	300	13	300					13	220	13	280					0	16	300	13	350	0.92	0.41		0.44	0.41				1700	1475	1775	2075
MS18 or MS18 MOD	4300	200	200	200	13	270	13	300					13	200	13	270					0	16	300	13	350	0.92	0.40		0.44	0.41				1700	1475	1775	2075
MS18 or MS18 MOD	4800	200	225	200	13	250	13	280					13	190	13	280					0	16	300	13	350	0.92	0.40		0.44	0.41				1700	1475	1800	2100
MS18 or MS18 MOD	5300	200	225	200	13	230	13	270					13	190	13	250					0	16	300	13	350	0.92	0.40		0.43	0.40				1700	1500	1800	2100
MS18 or MS18 MOD	5800	200	225	200	13	210	13	240					13	170	13	240					0	16	300	13	350	0.92	0.40		0.43	0.40				1700	1500	1800	2100
MS18 or MS18 MOD	6300	200	250	200	13	190	13	220					13	160	13	240					0	16	300	13	350	0.92	0.39		0.43	0.40				1700	1500	1800	2125
MS18 or MS18 MOD	6800	200	250	200	13	180	13	200					13	160	13	220					0	16	300	13	350	0.92	0.39		0.42	0.40				1700	1525	1825	2125
MS18 or MS18 MOD	7300	200	250	200	13	170	13	190					16	230	13	210					0	16	300	13	350	0.92	0.39		0.42	0.40				1700	1525	1825	2125
MS18 or MS18 MOD	7775	225	250	200	13	170	13	190					16	220	13	190					0	16	300	13	350	0.91	0.39		0.43	0.40				1700	1550	1850	2150
MS18 or MS18 MOD	8275	225	275	200	13	160	13	180					16	210	13	190					0	16	300	13	350	0.91	0.39		0.43	0.40				1700	1550	1875	2175
MS18 or MS18 MOD	8775	225	275	200	16	240	13	170					16	220	13	190					0	16	300	13	350	0.91	0.39		0.42	0.40				1700	1575	1875	2175
MS18 or MS18 MOD	9275	225	275	225	16	220	13	180					16	200	13	200					0	16	300	13	350	0.91	0.39		0.42	0.40				1725	1575	1875	2175
MS18 or MS18 MOD	9750	250	275	225	16	230	13	190					16	200	13	190					0	16	300	13	350	0.90	0.39		0.43	0.40				1725	1600	1900	2200

	DESIGN FILL	MEMBER THICKNESSES			SPAN (S) = 1.5 m; HT (m) = 2.1 or 2.4																															
					TOP SLAB BARS								BOTTOM SLAB BARS								WALL BARS					COEFFICIENTS (see note)								"C" Multiplier	"K" Multiplier	
		TS	BS	TX	A1	Bars	J3	Bars					A2	Bars	J4	Bars					B2 Bars		F	Bars		J4			J3					S = 1.5 m	HT = 2.1 m	HT = 2.4 m
	(mm)	Thick	Thick.	Thick	Size	c to c	Size	c to c					Size	c to c	Size	c to c					G1	Size	c to c	Size	c to c	K3	C4		K2	C1				mm	mm	mm
MS18	225	275	225	200	13	160	13	280					16	210	13	250					300	16	300	13	350	0.91	0.69		0.29	0.66				1700	2475	2775
MS18	800	200	200	200	13	210	13	300					13	160	13	300					300	16	300	13	350	0.94	0.69		0.27	0.66				1700	2375	2675
MS18	1300	200	200	200	13	300	13	300					13	230	13	280					0	16	300	13	350	0.94	0.70		0.27	0.66				1700	2375	2675
MS18	1800	200	200	200	13	300	13	300					13	240	13	240					0	16	300	13	350	0.94	0.60		0.27	0.66				1700	2375	2675
MS18	2300	200	200	200	13	300	13	300					13	230	13	220					0	16	300	13	350	0.94	0.58		0.27	0.66				1700	2375	2675
MS18 MOD	200	300	225	200	16	210	13	250					16	180	13	230					300	16	300	13	350	0.91	0.70		0.30	0.66				1700	2500	2800
MS18 MOD	800	200	225	200	13	180	13	280					13	160	13	300					300	16	300	13	350	0.94	0.69		0.27	0.66				1700	2400	2700
MS18 MOD	1300	200	200	200	13	300	13	300					13	210	13	270					0	16	300	13	350	0.94	0.70		0.27	0.66				1700	2375	2675
MS18 MOD	1800	200	200	200	13	300	13	300					13	220	13	240					0	16	300	13	350	0.94	0.60		0.27	0.66				1700	2375	2675
MS18 MOD	2300	200	200	200	13	300	13	300					13	220	13	220					0	16	300	13	350	0.94	0.58		0.27	0.66				1700	2375	2675
MS18 or MS18 MOD	2800	200	200	200	13	300	13	300					13	270	13	200					0	16	300	13	350	0.94	0.56		0.27	0.62				1700	2375	2675
MS18 or MS18 MOD	3300	200	200	200	13	300	13	270					13	240	13	190					0	16	300	13	350	0.94	0.54		0.27	0.59				1700	2375	2675
MS18 or MS18 MOD	3800	200	200	200	13	300	13	240					13	220	13	170					0	16	300	13	350	0.94	0.53		0.27	0.57				1700	2375	2675
MS18 or MS18 MOD	4300	200	200	200	13	280	13	220					13	200	13	160					0	16	300	13	350	0.94	0.52		0.27	0.55				1700	2375	2675
MS18 or MS18 MOD	4800	200	225	200	13	260	13	190					13	210	13	170					0	16	300	13	350	0.94	0.55		0.27	0.54				1700	2400	2700
MS18 or MS18 MOD	5300	200	225	225	13	240	13	220					13	190	13	170					0	16	300	13	350	0.94	0.51		0.27	0.51				1725	2400	2700
MS18 or MS18 MOD	5800	200	225	225	13	220	13	200					13	180	13	160					0	16	300	13	350	0.94	0.51		0.27	0.50				1725	2400	2700
MS18 or MS18 MOD	6300	200	250	225	13	210	13	190					13	180	13	170					0	16	300	13	350	0.94	0.52		0.27	0.50				1725	2425	2725
MS18 or MS18 MOD	6800	200	250	225	13	200	13	180					13	170	13	160					0	16	300	13	350	0.94	0.52		0.27	0.49				1725	2425	2725
MS18 or MS18 MOD	7300	200	250	250	13	180	13	180					13	160	13	170					0	16	300	13	350	0.94	0.50		0.27	0.48				1750	2425	2725
MS18 or MS18 MOD	7775	225	275	250	13	190	13	190					13	160	13	170					0	16	300	13	350	0.93	0.51		0.27	0.49				1750	2450	2775
MS18 or MS18 MOD	8275	225	275	250	13	180	13	170					13	160	13	160					0	16	300	13	350	0.93	0.50		0.27	0.49				1750	2475	2775
MS18 or MS18 MOD	8775	225	275	250	13	170	13	170					16	240	13	160					0	16	290	13	350	0.93	0.50		0.27	0.49				1750	2475	2775
MS18 or MS18 MOD	9275	225	275	275	13	160	13	180					16	230	13	160					0	16	300	13	350	0.93	0.49		0.27	0.48				1775	2475	2775
MS18 or MS18 MOD	9750	250	300	275	13	170	13	170					16	240	13	170					0	16	300	13	350	0.93	0.50		0.28	0.49				1775	2525	2825

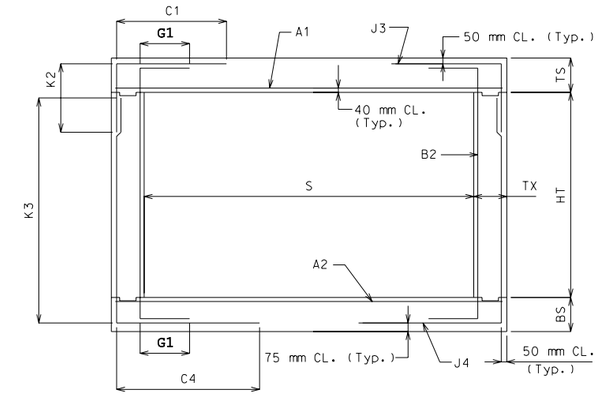

SECTION THRU BOX

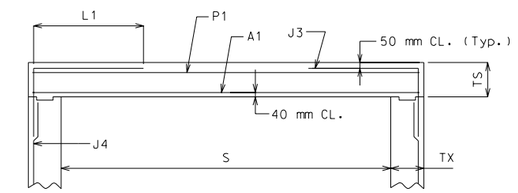

PART SECTION THRU BOX FOR MODIFIED J3 ALTERNATIVE
(B2 BAR NOT SHOWN FOR CLARITY)

NOTE: IF DESIGN FILL FALLS BETWEEN TABULATED FILLS, USE THE ADJACENT TABULATED FILL WHICH YIELDS THE GREATER MEMBER THICKNESS. IF THE MEMBER THICKNESSES ARE EQUAL, USE THE ADJACENT TABULATED FILL WHICH YIELDS THE GREATER AREA OF REINFORCEMENT.

SPECIAL DESIGNS ARE REQUIRED WHEN THE DESIGN FILL IS OUTSIDE THE RANGE OF TABULATED FILLS.

ALL DIMENSIONS ARE IN mm UNLESS OTHERWISE SPECIFIED

COEFFICIENTS: DIMENSIONS MARKED WITH C# OR K# ARE THE PRODUCT OF THE COEFFICIENT AND ITS ASSOCIATED MULTIPLIER.

DESIGN FILL HEIGHT GIVEN IN THE TABLES IS THE HEIGHT FROM THE TOP OF THE EARTH FILL OR ROADWAY TO THE TOP OF THE TOP SLAB.

ALL CULVERTS MEET STRENGTH REQUIREMENTS FOR MILITARY 106 kN TANDEM AXLE LOADING.

AT CONTRACTOR'S OPTION, A MODIFIED J3 ALTERNATIVE MAY BE UTILIZED WHEN THE DISTANCE BETWEEN THE ENDS OF J3 BARS AT TOP SLAB IS LESS THAN 600 mm. J3 BARS WITH HORIZONTAL LENGTH L1 (Instead of C1) MUST BE USED, WHERE L1 IS EQUAL TO 450, 550, AND 700 mm FOR #13, #16, AND #19 BARS, RESPECTIVELY. ADDITIONAL P1 BAR IS REQUIRED WITH THE MODIFIED J3 ALTERNATIVE AND MUST BE OF THE SAME SIZE AND SPACING AS J3 BAR WITH A LENGTH EQUAL TO A1 BAR. NO ADDITIONAL PAYMENT WILL BE MADE FOR THIS SUBSTITUTION.

MISSOURI HIGHWAY AND TRANSPORTATION COMMISSION

CONCRETE SINGLE BOX CULVERT

MEMBER SIZES AND REINFORCEMENT

(MS18 & MS18 MOD LOADING)

DATE: | EFFECTIVE: 04-01-2002 | **M703.15C** | 2/13

| | DESIGN FILL | MEMBER THICKNESSES | | | Span (S) = 1.8 m; HT (m) = 1.2 or 1.5 | | |

Span (S) = 2.1 m; HT (m) = 1.2 or 1.5 or 1.8

Design Fill	(mm)	TS Thick	BS Thick.	TX Thick	TI Thick.	Top Slab A1 Size	A1 Bars c to c	J3 Size	J3 Bars c to c	H1 Size	H1 Bars c to c	H2 Size	H2 Bars c to c	Bottom Slab A2 Size	A2 Bars c to c	J4 Size	J4 Bars c to c	H3 Size	H3 Bars c to c	Wall B1 Size	B1 Bars c to c	G1	B2 Size	B2 Bars c to c	F Size	F Bars c to c	J4: C4	J4: K3	H3: C7	J3: C1	J3: K2	H1: C5	H2: C6	"C" Multiplier S = 2.1 m (mm)	"K" Multiplier HT = 1.2 m (mm)	"K" Multiplier HT = 1.5 m (mm)	"K" Multiplier HT = 1.8 m (mm)
MS18	250	250	275	200	200	16	210	13	250	16	410	16	410	13	190	16	180	16	200	16	300	300	16	200	13	350	0.43	0.90	0.52	0.46	0.44	0.84	0.40	2300	1575	1875	2200
	800	200	225	200	200	13	180	13	220	16	460	16	460	13	250	13	230	16	180	16	300	300	16	300	13	350	0.35	0.92	0.47	0.45	0.43	0.60	0.31	2300	1500	1800	2100
	1300	200	200	200	200	13	270	13	300	13	380	13	380	13	240	13	250	16	180	16	300	300	16	300	13	350	0.34	0.92	0.42	0.37	0.44	0.45	0.29	2300	1475	1775	2075
	1800	200	225	200	200	13	280	13	300	13	370	13	370	13	250	13	300	13	160	16	300	300	16	300	13	350	0.33	0.92	0.39	0.34	0.43	0.43	0.28	2300	1500	1800	2100
	2300	200	225	200	200	13	270	13	300	13	340	13	340	13	230	13	300	16	230	16	300	0	16	300	13	350	0.32	0.92	0.39	0.32	0.43	0.41	0.28	2300	1500	1800	2100
MS18 MOD	200	300	300	200	200	16	210	13	250	16	390	16	390	13	170	16	180	16	200	16	300	300	16	180	13	350	0.42	0.88	0.53	0.46	0.45	0.84	0.45	2300	1650	1975	2275
	775	225	250	200	200	13	160	13	200	16	450	16	450	13	240	13	220	16	170	16	300	300	16	300	13	350	0.35	0.91	0.49	0.49	0.43	0.71	0.32	2300	1550	1850	2150
	1300	200	225	200	200	13	240	13	270	13	330	13	330	13	250	13	270	16	210	16	300	300	16	300	13	350	0.34	0.92	0.43	0.38	0.43	0.47	0.30	2300	1500	1800	2100
	1800	200	225	200	200	13	250	13	280	13	330	13	330	13	230	13	280	16	220	16	300	300	16	300	13	350	0.33	0.92	0.40	0.34	0.43	0.43	0.29	2300	1500	1800	2100
	2300	200	225	200	200	13	250	13	280	13	310	13	310	13	220	13	280	16	220	16	300	0	16	300	13	350	0.32	0.92	0.39	0.32	0.43	0.42	0.28	2300	1500	1800	2100
MS18 or MS18 MOD	2800	200	250	200	200	13	230	13	250	16	450	16	450	13	210	13	300	16	210	16	300	0	16	300	13	350	0.31	0.92	0.38	0.32	0.43	0.40	0.28	2300	1500	1825	2125
	3300	200	250	200	200	13	210	13	240	16	410	16	410	13	210	13	270	16	230	16	300	0	16	300	13	350	0.30	0.92	0.37	0.31	0.42	0.40	0.28	2300	1525	1825	2125
	3775	225	250	200	200	13	220	13	240	16	450	16	450	13	200	13	250	16	200	16	300	0	16	300	13	350	0.30	0.91	0.38	0.30	0.43	0.40	0.28	2300	1550	1850	2150
	4275	225	275	200	200	13	210	13	220	16	410	16	410	13	200	13	250	16	230	16	300	0	16	300	13	350	0.29	0.91	0.37	0.30	0.42	0.40	0.28	2300	1575	1875	2175
	4775	225	275	200	200	13	210	13	220	16	400	16	400	13	200	13	240	16	230	16	300	0	16	300	13	350	0.29	0.91	0.37	0.30	0.42	0.39	0.28	2300	1575	1875	2175
	5250	250	300	200	200	13	210	13	220	16	430	16	430	13	190	13	240	16	200	16	300	0	16	300	13	350	0.29	0.90	0.38	0.30	0.43	0.39	0.28	2300	1600	1900	2225
	5750	250	300	200	200	13	200	13	200	16	380	16	380	13	190	13	230	16	220	16	300	0	16	300	13	350	0.29	0.90	0.37	0.29	0.43	0.39	0.28	2300	1625	1925	2225
	6225	275	325	200	200	13	200	13	200	16	400	16	400	13	200	13	230	16	220	16	300	0	16	300	13	350	0.28	0.90	0.37	0.29	0.43	0.39	0.28	2300	1675	1975	2275
	6725	275	325	200	200	13	190	13	190	16	370	16	370	13	180	13	210	16	210	16	300	0	16	300	13	350	0.28	0.90	0.37	0.29	0.43	0.39	0.28	2300	1675	1975	2275
	7200	300	350	200	200	13	190	13	190	16	390	16	390	13	190	13	210	16	210	16	300	0	16	300	13	350	0.28	0.89	0.37	0.29	0.43	0.39	0.28	2300	1725	2025	2325
	7700	300	350	200	200	13	180	13	170	16	360	16	360	13	170	13	200	16	200	16	300	0	16	300	13	350	0.28	0.89	0.37	0.29	0.43	0.39	0.28	2300	1725	2025	2325
	8175	325	375	200	200	13	180	13	170	16	380	16	380	13	180	13	200	16	200	16	300	0	16	300	13	350	0.28	0.88	0.38	0.29	0.43	0.39	0.28	2300	1775	2075	2375
	8675	325	375	200	200	13	170	13	170	16	350	16	350	13	170	13	190	16	190	16	300	0	16	300	13	350	0.28	0.88	0.38	0.28	0.43	0.39	0.28	2300	1775	2075	2375
	9150	350	400	225	200	13	170	13	190	16	370	16	370	13	160	13	200	16	180	16	300	0	16	300	13	350	0.29	0.87	0.38	0.29	0.44	0.39	0.28	2313	1825	2100	2400
	9650	350	400	225	200	13	170	13	180	16	350	16	350	13	160	13	200	16	190	16	300	0	16	300	13	350	0.28	0.87	0.38	0.29	0.44	0.39	0.28	2313	1825	2125	2425

SPAN (S) = 2.1 m; HT (m) = 2.1 or 2.4

Design Fill	(mm)	TS Thick	BS Thick.	TX Thick	TI Thick.	Top Slab A1 Size	A1 Bars c to c	J3 Size	J3 Bars c to c	H1 Size	H1 Bars c to c	H2 Size	H2 Bars c to c	Bottom Slab A2 Size	A2 Bars c to c	J4 Size	J4 Bars c to c	H3 Size	H3 Bars c to c	Wall B1 Size	B1 Bars c to c	G1	B2 Size	B2 Bars c to c	F Size	F Bars c to c	J4: C4	J4: K3	H3: C7	J3: C1	J3: K2	H1: C5	H2: C6	"C" Multiplier S = 2.1 m (mm)	"K" Multiplier HT = 2.1 m (mm)	"K" Multiplier HT = 2.4 m (mm)
MS18	250	250	250	200	200	16	210	13	220	16	390	16	390	13	170	16	160	16	190	16	300	300	16	200	13	350	0.49	0.92	0.51	0.46	0.28	0.84	0.42	2300	2475	2775
	800	200	225	200	200	13	170	13	190	16	450	16	450	13	240	13	190	16	170	16	300	300	16	300	13	350	0.43	0.94	0.47	0.50	0.27	0.84	0.31	2300	2400	2700
	1300	200	225	200	200	13	270	13	240	13	370	13	370	13	260	13	230	16	230	16	300	300	16	300	13	350	0.40	0.94	0.42	0.44	0.27	0.47	0.30	2300	2400	2700
	1800	200	225	200	200	13	270	13	240	13	360	13	360	13	240	13	230	16	240	16	300	300	16	300	13	350	0.39	0.94	0.40	0.40	0.27	0.43	0.29	2300	2400	2700
	2300	200	225	200	200	13	260	13	220	13	340	13	340	13	220	13	210	16	230	16	300	0	16	300	13	350	0.37	0.94	0.38	0.38	0.27	0.41	0.28	2300	2400	2700
MS18 MOD	200	300	275	200	200	16	200	13	220	16	350	16	350	13	160	16	160	16	190	16	300	300	16	200	13	350	0.50	0.91	0.52	0.46	0.29	0.84	0.46	2300	2550	2850
	775	225	250	200	200	13	160	13	180	16	440	16	440	13	230	13	180	16	160	16	300	300	16	300	13	350	0.44	0.93	0.49	0.46	0.27	0.84	0.32	2300	2450	2750
	1300	200	225	200	200	13	230	13	230	13	330	13	330	13	240	13	210	16	200	16	300	300	16	300	13	350	0.40	0.94	0.43	0.44	0.27	0.49	0.30	2300	2400	2700
	1800	200	225	200	200	13	250	13	230	13	330	13	330	13	220	13	210	16	220	16	300	300	16	300	13	350	0.39	0.94	0.40	0.40	0.27	0.44	0.29	2300	2400	2700
	2300	200	225	200	200	13	240	13	210	13	320	13	320	13	210	13	200	16	210	16	300	0	16	300	13	350	0.37	0.94	0.39	0.38	0.27	0.42	0.28	2300	2400	2700
MS18 or MS18 MOD	2800	200	250	200	200	13	230	13	190	16	450	16	450	13	220	13	210	13	160	16	300	0	16	300	13	350	0.37	0.94	0.37	0.37	0.27	0.40	0.28	2300	2425	2725
	3300	200	250	200	200	13	210	13	180	16	410	16	410	13	210	13	190	16	230	16	300	0	16	300	13	350	0.36	0.94	0.37	0.36	0.27	0.40	0.27	2300	2425	2725
	3775	225	275	200	200	13	230	13	170	16	440	16	440	13	220	13	180	13	160	16	300	0	16	300	13	350	0.35	0.93	0.37	0.36	0.27	0.40	0.28	2300	2475	2775
	4275	225	275	200	200	13	210	13	160	16	410	16	410	13	200	13	160	16	230	16	300	0	16	300	13	350	0.35	0.93	0.37	0.35	0.27	0.40	0.28	2300	2475	2775
	4775	225	275	200	200	13	210	16	230	16	410	16	410	13	200	16	240	16	230	16	300	0	16	300	13	350	0.35	0.93	0.37	0.36	0.28	0.39	0.28	2300	2475	2775
	5250	250	300	200	200	13	220	16	220	16	430	16	430	13	210	16	220	16	240	16	300	0	16	300	13	350	0.35	0.93	0.37	0.36	0.29	0.39	0.28	2300	2525	2825
	5750	250	300	225	200	13	200	13	160	16	390	16	390	13	190	13	160	16	220	16	300	0	16	300	13	350	0.35	0.93	0.37	0.35	0.28	0.39	0.28	2313	2525	2825
	6225	275	325	225	200	13	210	16	230	16	410	16	410	13	200	13	160	16	230	16	300	0	16	300	13	350	0.35	0.92	0.37	0.36	0.29	0.39	0.28	2313	2575	2875
	6725	275	325	225	200	13	190	16	220	16	380	16	380	13	180	16	220	16	210	16	300	0	16	300	13	350	0.35	0.92	0.37	0.36	0.32	0.39	0.27	2313	2575	2875
	7200	300	350	250	200	13	200	13	160	16	400	16	400	13	190	13	160	16	220	16	300	0	16	300	13	350	0.35	0.91	0.37	0.36	0.28	0.39	0.28	2325	2625	2925
	7700	300	350	250	200	13	190	16	230	16	380	16	380	13	180	16	240	16	210	16	300	0	16	300	13	350	0.36	0.91	0.37	0.36	0.29	0.39	0.27	2325	2625	2925
	8175	325	375	250	200	13	190	16	220	16	390	16	390	13	170	16	220	16	190	16	300	0	16	300	13	350	0.36	0.90	0.37	0.36	0.30	0.39	0.27	2325	2675	2950
	8675	325	375	250	200	13	180	16	200	16	370	16	370	13	170	16	220	16	200	16	300	0	16	300	13	350	0.36	0.90	0.37	0.36	0.33	0.39	0.27	2325	2675	2975
	9150	350	375	275	200	13	180	16	220	16	360	16	360	13	170	16	240	16	190	16	300	0	16	300	13	350	0.36	0.90	0.37	0.36	0.30	0.38	0.27	2338	2700	2975
	9650	350	400	275	200	13	180	16	220	16	370	16	370	13	170	16	230	16	200	16	300	0	16	300	13	350	0.36	0.90	0.36	0.36	0.30	0.38	0.27	2338	2725	3025

SPAN (S) = 2.1 m; HT (m) = 2.7 or 3

Design Fill	(mm)	TS Thick	BS Thick.	TX Thick	TI Thick.	Top Slab A1 Size	A1 Bars c to c	J3 Size	J3 Bars c to c	H1 Size	H1 Bars c to c	H2 Size	H2 Bars c to c	Bottom Slab A2 Size	A2 Bars c to c	J4 Size	J4 Bars c to c	H3 Size	H3 Bars c to c	Wall B1 Size	B1 Bars c to c	G1	B2 Size	B2 Bars c to c	F Size	F Bars c to c	J4: C4	J4: K3	H3: C7	J3: C1	J3: K2	H1: C5	H2: C6	"C" Multiplier S = 2.1 m (mm)	"K" Multiplier HT = 2.7 m (mm)	"K" Multiplier HT = 3.0 m (mm)
MS18	250	250	275	225	225	16	210	13	200	16	400	16	400	13	170	16	170	16	220	16	300	300	16	280	13	350	0.61	0.94	0.53	0.46	0.23	0.84	0.41	2325	3100	3400
	800	200	225	225	225	13	170	13	180	16	450	16	450	13	220	16	240	16	170	16	300	300	16	300	13	350	0.52	0.95	0.47	0.46	0.22	0.84	0.31	2325	3000	3300
	1300	200	225	225	225	13	270	13	210	13	370	13	370	13	250	13	160	16	220	16	300	300	16	300	13	350	0.48	0.95	0.42	0.53	0.22	0.47	0.30	2325	3000	3300
	1800	200	225	225	225	13	280	13	200	13	370	13	370	13	230	16	240	16	240	16	300	300	16	300	13	350	0.47	0.95	0.39	0.47	0.22	0.43	0.29	2325	3000	3300
	2300	200	225	225	225	13	260	13	190	13	340	13	340	13	210	16	220	16	230	16	300	0	16	300	13	350	0.45	0.95	0.38	0.45	0.22	0.41	0.28	2325	3000	3300
MS18 MOD	200	300	300	225	225	16	200	13	200	16	370	16	370	13	160	16	160	16	210	16	300	300	16	250	13	350	0.61	0.93	0.53	0.46	0.24	0.84	0.45	2325	3175	3475
	775	225	250	225	225	13	160	13	170	16	440	16	440	13	220	16	160	16	160	16	300	300	16	300	13	350	0.53	0.95	0.49	0.46	0.22	0.84	0.32	2325	3050	3350
	1300	200	225	225	225	13	230	13	190	13	330	13	330	13	220	13	160	16	200	16	300	300	16	300	13	350	0.48	0.95	0.42	0.54	0.22	0.49	0.30	2325	3000	3300
	1800	200	225	225	225	13	250	13	190	13	330	13	330	13	210	16	230	16	220	16	300	300	16	300	13	350	0.47	0.95	0.40	0.47	0.22	0.44	0.29	2325	3000	3300
	2300	200	250	225	225	13	250	13	180	13	320	13	320	13	210	13	170	16	210	16	300	0	16	300	13	350	0.46	0.95	0.38	0.45	0.22	0.42	0.28	2325	3000	3325
MS18 or MS18 MOD	2800	200	250	225	225	13	240	13	160	16	460	16	460	13	220	13	160	13	160	16	300	0	16	300	13	350	0.45	0.95	0.37	0.44	0.21	0.40	0.28	2325	3025	3325
	3300	200	250	225	225	13	220	16	240	16	430	16	430	13	200	16	220	16	240	16	300	0	16	300	13	350	0.45	0.95	0.37	0.44	0.23	0.39	0.28	2325	3025	3325
	3775	225	275	225	225	13	200	16	210	16	390	16	390	13	210	16	210	13	160	16	300	0	16	300	13	350	0.45	0.95	0.36	0.44	0.23	0.39	0.28	2325	3075	3350
	4275	225	275	225	225	13	210	16	200	16	420	16	420	13	200	16	190	16	230	16	300	0	16	290	13	350	0.44	0.95	0.37	0.44	0.26	0.39	0.28	2325	3075	3375
	4775	225	275	250	225	13	220	16	230	16	430	16	430	13	200	16	220	16	240	16	300	0	16	300	13	350	0.43	0.95	0.36	0.43	0.26	0.39	0.28	2338	3075	3375
	5250	250	300	250	225	13	210	16	200	16	400	16	400	13	210	16	200	13	160	16	300	0	16	290	13	350	0.43	0.95	0.36	0.43	0.26	0.39	0.28	2338	3125	3400
	5750	250	300	250	225	13	210	16	190	16	410	16	410	13	200	16	180	16	220	16	300	0	16	280	13	350	0.43	0.94	0.36	0.43	0.26	0.39	0.27	2338	3125	3425
	6225	275	325	275	225	13	200	16	210	16	390	16	390	13	200	16	200	16	230	16	300	0	16	300	13	350	0.43	0.94	0.36	0.43	0.26	0.38	0.27	2350	3175	3450
	6725	275	325	275	225	13	200	16	190	16	400	16	400	13	190	16	190	16	220	16	300	0	16	280	13	350	0.43	0.93	0.36	0.43	0.26	0.38	0.27	2350	3175	3475
	7200	300	350	275	225	13	190	16	180	16	390	16	390	13	180	16	180	16	210	16	300	0	16	270	13	350	0.43	0.93	0.36	0.43	0.27	0.38	0.27	2350	3225	3475
	7700	300	350	300	225	13	190	16	200	16	400	16	400	13	180	16	190	16	210	16	300	0	16	280	13	350	0.43	0.93	0.36	0.43	0.27	0.38	0.27	2363	3225	3525
	8200	300	350	300	225	13	180	16	190	16	370	16	370	13	170	16	180	16	200	16	300	0	16	270	13	350	0.43	0.93	0.36	0.43	0.27	0.38	0.27	2363	3225	3525
	8675	325	375	300	225	13	190	16	180	16	390	16	390	13	180	16	180	16	210	16	300	0	16	260	13	350	0.43	0.92	0.36	0.43	0.27	0.38	0.27	2363	3275	3575
	9175	325	375	325	225	13	180	16	190	16	370	16	370	13	170	16	190	16	200	16	300	0	16	270	13	350	0.43	0.92	0.36	0.43	0.27	0.38	0.27	2375	3275	3575
	9650	350	400	325	225	13	180	16	180	16	390	16	390	13	170	16	180	16	210	16	300	0	16	260	13	350	0.43	0.92	0.35	0.43	0.27	0.37	0.27	2375	3325	3625

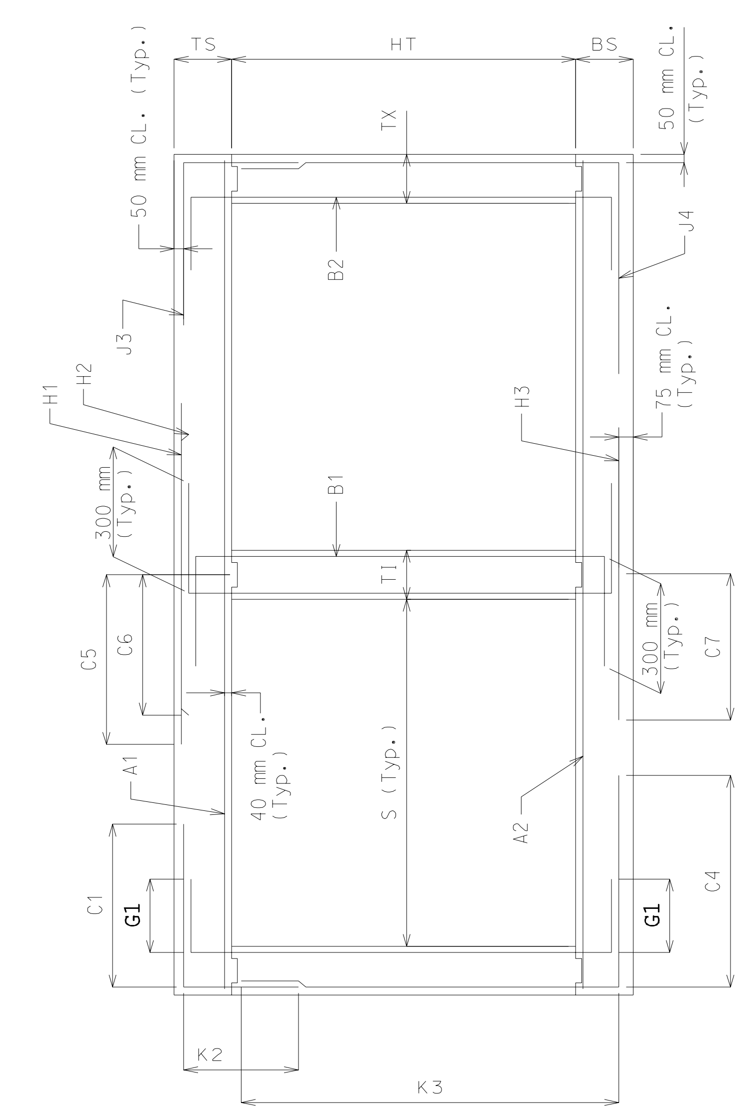

SECTION THRU BOX

NOTE: IF DESIGN FILL FALLS BETWEEN TABULATED FILLS, USE THE ADJACENT TABULATED FILL WHICH YIELDS THE GREATER MEMBER THICKNESS. IF THE MEMBER THICKNESSES ARE EQUAL, USE THE ADJACENT TABULATED FILL WHICH YIELDS THE GREATER AREA OF REINFORCEMENT.

SPECIAL DESIGNS ARE REQUIRED WHEN THE DESIGN FILL IS OUTSIDE THE RANGE OF TABULATED FILLS.

ALL DIMENSIONS ARE IN mm UNLESS OTHERWISE SPECIFIED.

COEFFICIENTS: DIMENSIONS MARKED WITH C# OR K# ARE THE PRODUCT OF THE COEFFICIENT AND ITS ASSOCIATED MULTIPLIER.

DESIGN FILL HEIGHT GIVEN IN THE TABLES IS THE HEIGHT FROM THE TOP OF THE EARTH FILL OR ROADWAY TO THE TOP OF THE TOP SLAB.

ALL CULVERTS MEET STRENGTH REQUIREMENTS FOR MILITARY 106 kN TANDEM AXLE LOADING.

MISSOURI HIGHWAY AND TRANSPORTATION COMMISSION

CONCRETE DOUBLE BOX CULVERT

MEMBER SIZES AND REINFORCEMENT

(MS18 & MS18 MOD LOADING)

DATE: | EFFECTIVE: 04-01-2002 | **M703.45B**

Span (S) = 2.4 m

HT (m) = 1.5 or 1.8 or 2.1

	DESIGN FILL	MEMBER THICKNESSES			TOP SLAB BARS				BOTTOM SLAB BARS				WALL BARS					COEFFICIENTS (see note)				"C" Multiplier	"K" Multiplier		
		TS	BS	TX	A1	Bars	J3	Bars	A2	Bars	J4	Bars		B2	Bars	F	Bars	J4		J3		S = 2.4 m	HT = 1.5 m	HT = 1.8 m	HT = 2.1 m
	(mm)	Thick	Thick.	Thick	Size	c to c	Size	c to c	Size	c to c	Size	c to c	G1	Size	c to c	Size	c to c	K3	C4	K2	C1	mm	mm	mm	mm
MS18	225	275	250	200	16	170	13	270	16	160	13	170	300	16	300	13	350	0.90	0.36	0.38	0.43	2600	1875	2175	2500
MS18	775	225	250	200	16	190	13	190	19	220	13	210	300	16	300	13	350	0.92	0.32	0.36	0.34	2600	1850	2150	2450
MS18	1275	225	225	200	13	160	13	220	16	190	13	220	0	16	300	13	350	0.93	0.31	0.37	0.33	2600	1825	2100	2400
MS18	1800	200	225	200	13	160	13	210	16	190	13	210	0	16	300	13	350	0.93	0.30	0.36	0.32	2600	1800	2100	2400
MS18	2300	200	225	200	16	230	13	190	16	180	13	190	0	16	300	13	350	0.93	0.30	0.36	0.31	2600	1800	2100	2400
MS18 MOD	200	300	250	200	19	210	13	250	19	190	13	170	300	16	300	13	350	0.90	0.35	0.39	0.44	2600	1925	2225	2525
MS18 MOD	775	225	275	200	16	160	13	160	19	200	13	200	300	16	300	13	350	0.92	0.32	0.36	0.34	2600	1875	2175	2475
MS18 MOD	1300	200	250	200	16	220	13	190	16	180	13	210	0	16	300	13	350	0.93	0.30	0.36	0.33	2600	1800	2100	2425
MS18 MOD	1800	200	225	200	16	230	13	190	16	180	13	200	0	16	300	13	350	0.93	0.30	0.36	0.32	2600	1800	2100	2400
MS18 MOD	2300	200	225	200	16	220	13	190	16	170	13	190	0	16	300	13	350	0.93	0.30	0.36	0.31	2600	1800	2100	2400
MS18 or MS18 MOD	2800	200	225	200	13	170	13	210	16	200	13	200	0	16	300	13	350	0.93	0.29	0.36	0.30	2600	1800	2100	2400
MS18 or MS18 MOD	3300	200	225	200	16	220	13	180	16	180	13	180	0	16	300	13	350	0.93	0.29	0.36	0.30	2600	1800	2100	2400
MS18 or MS18 MOD	3800	200	250	200	16	200	16	240	16	170	13	180	0	16	300	13	350	0.93	0.28	0.35	0.31	2600	1825	2125	2425
MS18 or MS18 MOD	4300	200	250	200	16	180	16	210	19	220	13	160	0	16	300	13	350	0.93	0.27	0.41	0.31	2600	1825	2125	2425
MS18 or MS18 MOD	4775	225	275	200	16	170	16	200	19	220	13	160	0	16	300	13	350	0.92	0.27	0.42	0.30	2600	1875	2175	2475
MS18 or MS18 MOD	5250	250	275	200	16	170	16	210	19	200	16	220	0	16	300	13	350	0.91	0.27	0.37	0.29	2600	1900	2200	2500
MS18 or MS18 MOD	5750	250	300	200	16	160	16	190	19	200	16	230	0	16	300	13	350	0.92	0.26	0.42	0.29	2600	1925	2225	2525
MS18 or MS18 MOD	6225	275	300	200	19	220	16	190	19	190	16	200	0	16	300	13	350	0.91	0.27	0.43	0.28	2600	1950	2250	2550
MS18 or MS18 MOD	6725	275	325	200	19	210	16	180	19	190	16	210	0	16	300	13	350	0.91	0.26	0.42	0.28	2600	1975	2275	2575
MS18 or MS18 MOD	7225	275	325	225	19	190	16	180	19	180	16	220	0	16	300	13	350	0.91	0.27	0.42	0.29	2625	1975	2275	2575
MS18 or MS18 MOD	7700	300	350	225	19	200	16	180	19	180	16	220	0	16	300	13	350	0.90	0.26	0.42	0.28	2625	2025	2325	2625
MS18 or MS18 MOD	8200	300	350	225	19	180	16	170	19	170	16	210	0	16	300	13	350	0.90	0.26	0.42	0.28	2625	2025	2325	2625
MS18 or MS18 MOD	8675	325	375	225	19	180	16	180	19	170	16	220	0	16	300	13	350	0.89	0.26	0.42	0.28	2625	2075	2375	2675
MS18 or MS18 MOD	9175	325	375	250	19	170	16	180	19	170	16	220	0	16	300	13	350	0.89	0.27	0.42	0.29	2650	2075	2375	2675
MS18 or MS18 MOD	9650	350	400	250	19	170	16	180	19	160	16	220	0	16	300	13	350	0.89	0.26	0.43	0.28	2650	2100	2400	2725

SPAN (S) = 2.4 m

HT (m) = 2.4 or 2.7

	DESIGN FILL	MEMBER THICKNESSES			TOP SLAB BARS				BOTTOM SLAB BARS				WALL BARS					COEFFICIENTS (see note)				"C" Multiplier	"K" Multiplier	
		TS	BS	TX	A1	Bars	J3	Bars	A2	Bars	J4	Bars		B2	Bars	F	Bars	J4		J3		S = 2.4 m	HT = 2.4 m	HT = 2.7 m
	(mm)	Thick	Thick.	Thick	Size	c to c	Size	c to c	Size	c to c	Size	c to c	G1	Size	c to c	Size	c to c	K3	C4	K2	C1	mm	mm	mm
MS18	225	275	250	225	16	160	13	250	19	200	13	170	300	16	300	13	350	0.92	0.44	0.26	0.61	2625	2800	3075
MS18	775	225	250	225	16	180	13	180	19	210	13	190	300	16	300	13	350	0.95	0.41	0.24	0.43	2625	2750	3025
MS18	1300	200	225	225	13	160	13	210	16	180	13	190	0	16	300	13	350	0.95	0.38	0.24	0.39	2625	2700	3000
MS18	1800	200	225	225	13	160	13	200	16	180	13	180	0	16	300	13	350	0.95	0.36	0.24	0.37	2625	2700	3000
MS18	2300	200	225	225	16	230	13	180	16	170	13	160	0	16	300	13	350	0.95	0.35	0.24	0.36	2625	2700	3000
MS18 MOD	200	300	250	225	19	200	13	240	19	190	13	160	300	16	300	13	350	0.92	0.45	0.27	0.61	2625	2825	3125
MS18 MOD	775	225	275	225	16	160	13	160	19	190	13	200	300	16	300	13	350	0.94	0.42	0.24	0.45	2625	2775	3075
MS18 MOD	1300	200	225	225	16	210	13	190	16	160	13	180	0	16	300	13	350	0.95	0.38	0.24	0.39	2625	2700	3000
MS18 MOD	1800	200	225	225	16	220	13	190	16	170	13	170	0	16	300	13	350	0.95	0.36	0.24	0.37	2625	2700	3000
MS18 MOD	2300	200	250	225	16	210	13	170	16	160	13	170	0	16	300	13	350	0.95	0.35	0.24	0.36	2625	2700	3025
MS18 or MS18 MOD	2800	200	225	225	13	170	13	190	16	200	13	160	0	16	300	13	350	0.95	0.34	0.24	0.35	2625	2700	3000
MS18 or MS18 MOD	3300	200	250	225	16	220	13	170	16	170	13	160	0	16	300	13	350	0.95	0.33	0.24	0.34	2625	2700	3025
MS18 or MS18 MOD	3800	200	250	225	16	200	16	220	16	170	16	230	0	16	300	13	350	0.95	0.34	0.28	0.35	2625	2725	3025
MS18 or MS18 MOD	4300	200	275	225	16	180	16	190	16	160	16	220	0	16	300	13	350	0.95	0.33	0.28	0.35	2625	2750	3050
MS18 or MS18 MOD	4775	225	275	225	16	170	16	190	19	220	16	200	0	16	300	13	350	0.94	0.33	0.28	0.34	2625	2775	3075
MS18 or MS18 MOD	5250	250	300	225	16	170	16	180	19	220	16	190	0	16	300	13	350	0.93	0.33	0.29	0.34	2625	2825	3125
MS18 or MS18 MOD	5750	250	300	225	16	170	16	170	19	210	16	180	0	16	300	13	350	0.93	0.32	0.29	0.33	2625	2825	3125
MS18 or MS18 MOD	6225	275	325	250	16	170	16	190	19	210	16	200	0	16	300	13	350	0.93	0.33	0.29	0.34	2650	2875	3175
MS18 or MS18 MOD	6725	275	325	250	19	220	16	180	19	200	16	180	0	16	300	13	350	0.93	0.32	0.29	0.34	2650	2875	3175
MS18 or MS18 MOD	7225	275	350	250	19	210	16	160	19	200	16	180	0	16	300	13	350	0.93	0.32	0.29	0.34	2650	2900	3200
MS18 or MS18 MOD	7700	300	350	275	19	210	16	180	19	190	16	190	0	16	300	13	350	0.92	0.32	0.29	0.34	2675	2925	3225
MS18 or MS18 MOD	8200	300	375	275	19	200	16	170	19	180	16	190	0	16	300	13	350	0.92	0.32	0.29	0.34	2675	2925	3250
MS18 or MS18 MOD	8675	325	375	275	19	200	16	170	19	180	16	180	0	16	300	13	350	0.91	0.32	0.30	0.33	2675	2975	3275
MS18 or MS18 MOD	9175	325	375	300	19	200	16	180	19	180	16	180	0	16	300	13	350	0.91	0.32	0.30	0.34	2700	2975	3275
MS18 or MS18 MOD	9650	350	400	300	19	200	16	170	19	180	16	180	0	16	300	13	350	0.91	0.32	0.30	0.33	2700	3025	3325

SPAN (S) = 2.4 m

HT (m) = 3 or 3.3

	DESIGN FILL	MEMBER THICKNESSES			TOP SLAB BARS				BOTTOM SLAB BARS				WALL BARS					COEFFICIENTS (see note)				"C" Multiplier	"K" Multiplier	
		TS	BS	TX	A1	Bars	J3	Bars	A2	Bars	J4	Bars		B2	Bars	F	Bars	J4		J3		S = 2.4 m	HT = 3.0 m	HT = 3.3 m
	(mm)	Thick	Thick.	Thick	Size	c to c	Size	c to c	Size	c to c	Size	c to c	G1	Size	c to c	Size	c to c	K3	C4	K2	C1	mm	mm	mm
MS18	225	275	250	225	16	160	13	200	19	200	13	160	300	16	300	13	350	0.94	0.64	0.21	0.61	2625	3400	3700
MS18	800	200	250	225	16	170	13	160	19	190	13	160	300	16	280	13	350	0.96	0.64	0.20	0.61	2625	3325	3625
MS18	1300	200	225	225	16	240	13	190	16	170	16	220	0	16	300	13	350	0.96	0.51	0.20	0.55	2625	3300	3600
MS18	1800	200	225	225	13	160	13	170	16	170	16	190	0	16	300	13	350	0.96	0.47	0.20	0.48	2625	3300	3600
MS18	2300	200	225	225	16	230	13	160	16	160	16	180	0	16	300	13	350	0.96	0.44	0.20	0.44	2625	3300	3600
MS18 MOD	200	300	250	225	19	200	13	200	19	170	16	220	300	16	300	13	350	0.93	0.66	0.22	0.61	2625	3425	3725
MS18 MOD	775	225	275	225	19	220	16	240	19	180	13	160	300	16	300	13	350	0.95	0.64	0.21	0.63	2625	3375	3675
MS18 MOD	1300	200	250	225	16	210	13	170	16	160	13	160	0	16	300	13	350	0.96	0.55	0.20	0.54	2625	3300	3625
MS18 MOD	1800	200	250	225	16	220	13	170	16	160	16	220	0	16	300	13	350	0.96	0.50	0.20	0.48	2625	3300	3625
MS18 MOD	2300	200	250	225	16	220	16	240	16	170	16	200	0	16	300	13	350	0.96	0.47	0.21	0.45	2625	3325	3625
MS18 or MS18 MOD	2800	200	225	225	13	180	16	240	16	190	16	170	0	16	280	13	350	0.96	0.43	0.21	0.43	2625	3300	3600
MS18 or MS18 MOD	3300	200	250	225	16	240	16	210	16	190	16	180	0	16	260	13	350	0.96	0.43	0.21	0.42	2625	3325	3625
MS18 or MS18 MOD	3800	200	250	250	16	210	16	190	16	170	16	170	0	16	280	13	350	0.96	0.41	0.23	0.40	2650	3325	3625
MS18 or MS18 MOD	4300	200	275	250	16	190	16	180	16	170	16	180	0	16	260	13	350	0.96	0.41	0.23	0.40	2650	3350	3650
MS18 or MS18 MOD	4775	225	275	250	16	190	16	180	16	160	16	170	0	16	250	13	350	0.95	0.41	0.23	0.40	2650	3375	3675
MS18 or MS18 MOD	5250	250	300	275	16	190	16	190	16	160	16	180	0	16	270	13	350	0.94	0.40	0.24	0.40	2675	3425	3725
MS18 or MS18 MOD	5750	250	300	275	16	180	16	180	19	210	16	170	0	16	250	13	350	0.94	0.40	0.24	0.40	2675	3425	3725
MS18 or MS18 MOD	6225	275	325	300	16	180	16	190	19	220	16	180	0	16	270	13	350	0.94	0.39	0.24	0.39	2700	3475	3775
MS18 or MS18 MOD	6725	275	325	300	16	170	16	180	19	210	16	170	0	16	260	13	350	0.94	0.39	0.24	0.39	2700	3475	3775
MS18 or MS18 MOD	7225	275	350	300	16	160	16	170	19	210	16	160	0	16	240	13	350	0.94	0.39	0.24	0.39	2700	3500	3800
MS18 or MS18 MOD	7700	300	350	325	16	160	16	180	19	200	16	170	0	16	260	13	350	0.93	0.39	0.24	0.39	2725	3525	3825
MS18 or MS18 MOD	8200	300	375	325	16	160	16	170	19	200	16	160	0	16	240	13	350	0.93	0.39	0.24	0.39	2725	3550	3850
MS18 or MS18 MOD	8675	325	375	325	19	220	16	160	19	190	19	220	0	16	240	13	350	0.93	0.41	0.25	0.39	2725	3575	3875
MS18 or MS18 MOD	9175	325	400	350	19	220	16	170	19	190	16	170	0	16	250	13	350	0.93	0.38	0.25	0.39	2750	3600	3900
MS18 or MS18 MOD	9650	350	400	350	19	210	16	160	19	190	16	160	0	16	240	13	350	0.92	0.38	0.25	0.39	2750	3625	3925

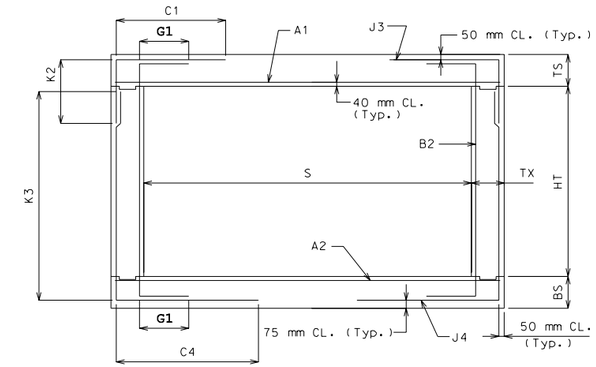

SECTION THRU BOX

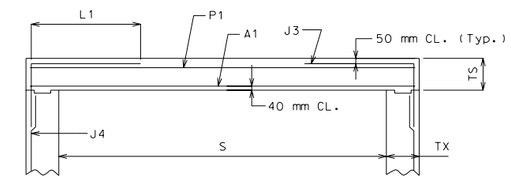

PART SECTION THRU BOX FOR MODIFIED J3 ALTERNATIVE
(B2 BAR NOT SHOWN FOR CLARITY)

NOTE: IF DESIGN FILL FALLS BETWEEN TABULATED FILLS, USE THE ADJACENT TABULATED FILL WHICH YIELDS THE GREATER MEMBER THICKNESS. IF THE MEMBER THICKNESSES ARE EQUAL, USE THE ADJACENT TABULATED FILL WHICH YIELDS THE GREATER AREA OF REINFORCEMENT.

SPECIAL DESIGNS ARE REQUIRED WHEN THE DESIGN FILL IS OUTSIDE THE RANGE OF TABULATED FILLS.

ALL DIMENSIONS ARE IN mm UNLESS OTHERWISE SPECIFIED

COEFFICIENTS: DIMENSIONS MARKED WITH C# OR K# ARE THE PRODUCT OF THE COEFFICIENT AND ITS ASSOCIATED MULTIPLIER.

DESIGN FILL HEIGHT GIVEN IN THE TABLES IS THE HEIGHT FROM THE TOP OF THE EARTH FILL OR ROADWAY TO THE TOP OF THE TOP SLAB.

ALL CULVERTS MEET STRENGTH REQUIREMENTS FOR MILITARY 106 kN TANDEM AXLE LOADING.

AT CONTRACTOR'S OPTION, A MODIFIED J3 ALTERNATIVE MAY BE UTILIZED WHEN THE DISTANCE BETWEEN THE ENDS OF J3 BARS AT TOP SLAB IS LESS THAN 600 mm. J3 BARS WITH HORIZONTAL LENGTH L1 (Instead of C1) MUST BE USED, WHERE L1 IS EQUAL TO 450, 550, AND 700 mm FOR #13, #16, AND #19 BARS, RESPECTIVELY. ADDITIONAL P1 BAR IS REQUIRED WITH THE MODIFIED J3 ALTERNATIVE AND MUST BE OF THE SAME SIZE AND SPACING AS J3 BAR WITH A LENGTH EQUAL TO A1 BAR. NO ADDITIONAL PAYMENT WILL BE MADE FOR THIS SUBSTITUTION.

MISSOURI HIGHWAY AND TRANSPORTATION COMMISSION

CONCRETE SINGLE BOX CULVERT

MEMBER SIZES AND REINFORCEMENT

(MS18 & MS18 MOD LOADING)

DATE:	EFFECTIVE: 04-01-2002	M703.15C	5/13

Span (S) = 2.7 m

HT (m) = 1.8 or 2.1 or 2.4

	DESIGN FILL	MEMBER THICKNESSES			TOP SLAB BARS				BOTTOM SLAB BARS				WALL BARS					COEFFICIENTS (see note)				"C" Multiplier	"K" Multiplier		
		TS	BS	TX	A1	Bars	J3	Bars	A2	Bars	J4	Bars	B2	Bars	F	Bars	J4		J3			S = 2.7 m	HT = 1.8 m	HT = 2.1 m	HT = 2.4 m
	(mm)	Thick	Thick.	Thick	Size	c to c	Size	c to c	Size	c to c	Size	c to c	G1	Size	c to c	Size	c to c	K3	C4	K2	C1	mm	mm	mm	mm
MS18	225	275	225	200	19	210	13	220	19	180	16	220	300	16	300	13	350	0.91	0.36	0.33	0.45	2900	2175	2475	2775
	775	225	250	200	19	220	16	240	19	180	13	170	300	16	300	13	350	0.93	0.32	0.36	0.34	2900	2150	2450	2750
	1300	200	225	200	16	190	13	170	19	210	13	170	0	16	300	13	350	0.94	0.30	0.31	0.32	2900	2100	2400	2700
	1800	200	225	200	16	190	13	160	19	210	13	160	0	16	300	13	350	0.94	0.29	0.31	0.31	2900	2100	2400	2700
	2300	200	250	200	16	190	16	230	19	220	13	170	0	16	300	13	350	0.94	0.28	0.36	0.31	2900	2125	2425	2725
MS18 MOD	200	300	250	200	19	180	13	210	19	170	16	220	300	16	300	13	350	0.91	0.36	0.34	0.47	2900	2225	2525	2825
	750	250	275	200	19	190	16	220	19	170	13	180	300	16	300	13	350	0.92	0.32	0.37	0.34	2900	2200	2500	2800
	1300	200	250	200	16	170	16	230	19	210	13	180	0	16	300	13	350	0.94	0.30	0.36	0.32	2900	2125	2425	2725
	1800	200	250	200	16	180	16	230	19	210	13	170	0	16	300	13	350	0.94	0.29	0.36	0.32	2900	2125	2425	2725
	2300	200	250	200	16	170	16	220	19	210	13	160	0	16	300	13	350	0.94	0.28	0.36	0.31	2900	2125	2425	2725
MS18 MOD or MS18	2800	200	250	200	16	160	16	190	19	190	16	230	0	16	300	13	350	0.94	0.28	0.36	0.30	2900	2125	2425	2725
	3300	200	250	200	16	180	16	200	19	220	16	230	0	16	300	13	350	0.94	0.27	0.36	0.30	2900	2125	2425	2725
	3775	225	275	200	16	170	16	200	19	210	16	220	0	16	300	13	350	0.93	0.27	0.36	0.29	2900	2175	2475	2775
	4275	225	275	200	19	220	16	180	19	190	16	200	0	16	300	13	350	0.93	0.26	0.36	0.29	2900	2175	2475	2775
	4750	250	300	200	19	220	16	170	19	190	16	190	0	16	300	13	350	0.93	0.26	0.36	0.28	2900	2225	2525	2825
	5250	250	300	200	19	190	19	220	19	170	16	180	0	16	300	13	350	0.93	0.25	0.36	0.30	2900	2225	2525	2825
	5725	275	325	225	19	190	16	170	19	180	16	200	0	16	300	13	350	0.92	0.26	0.37	0.28	2925	2275	2575	2875
	6225	275	350	225	19	180	19	220	19	160	16	200	0	16	300	13	350	0.92	0.25	0.37	0.28	2925	2275	2575	2900
	6700	300	350	225	19	180	16	160	19	160	16	180	0	16	300	13	350	0.91	0.25	0.37	0.27	2925	2325	2625	2925
	7175	325	375	225	19	180	16	160	19	170	16	180	0	16	300	13	350	0.90	0.25	0.37	0.27	2925	2375	2675	2975
	7675	325	375	250	19	160	16	160	19	160	16	190	0	16	300	13	350	0.90	0.26	0.37	0.27	2950	2375	2675	2975
	8150	350	400	250	19	170	16	160	19	160	16	190	0	16	300	13	350	0.90	0.25	0.37	0.27	2950	2425	2725	3025
	8650	350	400	250	19	160	19	220	22	210	16	180	0	16	300	13	350	0.90	0.25	0.37	0.29	2950	2425	2725	3025
	9125	375	425	275	19	160	16	170	22	210	16	190	0	16	300	13	350	0.89	0.26	0.38	0.32	2975	2475	2775	3075
	9625	375	425	275	22	210	16	160	22	200	16	180	0	16	300	13	350	0.89	0.26	0.38	0.32	2975	2475	2775	3075

SPAN (S) = 2.7 m

HT (m) = 2.7 or 3

	DESIGN FILL	MEMBER THICKNESSES			TOP SLAB BARS				BOTTOM SLAB BARS				WALL BARS					COEFFICIENTS (see note)				"C" Multiplier	"K" Multiplier	
		TS	BS	TX	A1	Bars	J3	Bars	A2	Bars	J4	Bars	B2	Bars	F	Bars	J4		J3			S = 2.7 m	HT = 2.7 m	HT = 3.0 m
	(mm)	Thick	Thick.	Thick	Size	c to c	Size	c to c	Size	c to c	Size	c to c	G1	Size	c to c	Size	c to c	K3	C4	K2	C1	mm	mm	mm
MS18	225	275	250	225	19	210	13	190	19	190	13	160	300	16	300	13	350	0.93	0.47	0.23	0.60	2925	3100	3400
	775	225	275	225	16	160	16	240	19	190	13	170	300	16	300	13	350	0.95	0.42	0.23	0.45	2925	3050	3375
	1300	200	250	225	16	200	13	170	16	160	13	170	0	16	300	13	350	0.95	0.37	0.21	0.38	2925	3025	3325
	1800	200	250	225	16	200	13	160	16	160	13	160	0	16	300	13	350	0.95	0.35	0.21	0.36	2925	3025	3325
	2300	200	250	225	16	190	16	230	19	220	16	220	0	16	300	13	350	0.95	0.34	0.23	0.35	2925	3025	3325
MS18 MOD	200	300	250	225	19	180	13	190	19	160	16	210	300	16	300	13	350	0.92	0.46	0.24	0.60	2925	3125	3425
	750	250	275	225	19	190	16	220	19	170	13	160	300	16	300	13	350	0.94	0.41	0.26	0.49	2925	3100	3400
	1300	200	250	225	16	180	13	160	19	200	13	160	0	16	300	13	350	0.95	0.37	0.21	0.38	2925	3025	3325
	1800	200	250	225	16	180	16	240	19	210	16	240	0	16	300	13	350	0.95	0.36	0.23	0.36	2925	3025	3325
	2300	200	250	225	16	180	16	220	19	200	16	220	0	16	300	13	350	0.95	0.34	0.25	0.35	2925	3025	3325
MS18 MOD or MS18	2800	200	275	225	16	170	16	200	19	200	16	210	0	16	300	13	350	0.95	0.33	0.25	0.34	2925	3025	3350
	3300	200	275	225	16	190	16	200	19	220	16	200	0	16	300	13	350	0.95	0.33	0.25	0.34	2925	3025	3350
	3775	225	275	225	16	180	16	190	19	210	16	180	0	16	300	13	350	0.95	0.32	0.26	0.33	2925	3075	3375
	4275	225	275	225	16	160	16	170	19	190	16	170	0	16	300	13	350	0.95	0.32	0.26	0.33	2925	3075	3375
	4750	250	300	250	16	160	16	180	19	190	16	180	0	16	300	13	350	0.94	0.32	0.26	0.33	2950	3125	3425
	5250	250	325	250	19	200	16	160	19	180	16	170	0	16	300	13	350	0.94	0.31	0.26	0.33	2950	3125	3450
	5725	275	325	250	19	200	19	220	19	180	16	160	0	16	300	13	350	0.93	0.31	0.30	0.32	2950	3175	3475
	6225	275	350	275	19	200	16	160	19	180	16	180	0	16	300	13	350	0.93	0.31	0.26	0.33	2975	3200	3500
	6700	300	350	275	19	190	16	160	19	170	16	160	0	16	300	13	350	0.93	0.31	0.27	0.32	2975	3225	3525
	7175	325	375	275	19	190	19	220	19	170	16	160	0	16	300	13	350	0.92	0.31	0.28	0.34	2975	3275	3575
	7675	325	375	300	19	190	16	160	19	160	16	160	0	16	300	13	350	0.92	0.31	0.27	0.32	3000	3275	3575
	8150	350	400	300	19	190	16	160	19	170	16	160	0	16	300	13	350	0.92	0.31	0.27	0.32	3000	3325	3625
	8650	350	400	300	19	180	19	210	19	160	19	220	0	16	300	13	350	0.92	0.33	0.31	0.34	3000	3325	3625
	9125	375	425	325	19	180	16	160	19	160	16	160	0	16	300	13	350	0.91	0.31	0.28	0.36	3025	3375	3675
	9625	375	425	325	19	170	19	210	22	210	16	160	0	16	300	13	350	0.91	0.31	0.31	0.38	3025	3375	3675

SPAN (S) = 2.7 m

HT (m) = 3.3 or 3.6

	DESIGN FILL	MEMBER THICKNESSES			TOP SLAB BARS				BOTTOM SLAB BARS				WALL BARS					COEFFICIENTS (see note)				"C" Multiplier	"K" Multiplier	
		TS	BS	TX	A1	Bars	J3	Bars	A2	Bars	J4	Bars	B2	Bars	F	Bars	J4		J3			S = 2.7 m	HT = 3.3 m	HT = 3.6 m
	(mm)	Thick	Thick.	Thick	Size	c to c	Size	c to c	Size	c to c	Size	c to c	G1	Size	c to c	Size	c to c	K3	C4	K2	C1	mm	mm	mm
MS18	225	275	250	250	19	200	13	180	19	180	16	230	300	16	300	13	350	0.94	0.65	0.20	0.60	2950	3700	4000
	775	225	275	250	16	160	16	220	19	190	16	240	300	16	300	13	350	0.95	0.65	0.21	0.62	2950	3675	3975
	1300	200	250	250	16	200	16	230	19	220	16	200	0	16	300	13	350	0.96	0.48	0.19	0.48	2950	3625	3925
	1800	200	250	250	16	200	16	220	19	220	16	180	0	16	300	13	350	0.96	0.44	0.21	0.43	2950	3625	3925
	2300	200	250	250	16	190	16	190	19	210	16	170	0	16	280	13	350	0.96	0.42	0.21	0.41	2950	3625	3925
MS18 MOD	200	300	275	250	19	180	13	170	19	160	16	200	300	16	300	13	350	0.94	0.65	0.20	0.60	2950	3725	4050
	750	250	300	250	19	190	16	200	19	160	16	220	300	16	300	13	350	0.95	0.65	0.22	0.62	2950	3700	4025
	1300	200	250	250	16	170	16	220	19	190	16	200	0	16	300	13	350	0.96	0.48	0.21	0.48	2950	3625	3925
	1800	200	250	250	16	180	16	200	19	200	16	180	0	16	300	13	350	0.96	0.44	0.21	0.43	2950	3625	3925
	2300	200	250	250	16	180	16	190	19	200	16	170	0	16	280	13	350	0.96	0.42	0.21	0.41	2950	3625	3925
MS18 MOD or MS18	2800	200	275	250	16	170	16	170	19	210	16	180	0	16	260	13	350	0.96	0.42	0.21	0.40	2950	3650	3950
	3300	200	275	250	16	190	16	170	16	160	16	170	0	16	250	13	350	0.96	0.41	0.21	0.39	2950	3650	3950
	3775	225	275	250	16	190	16	180	19	210	19	220	0	16	240	13	350	0.95	0.42	0.21	0.39	2950	3675	3975
	4275	225	300	275	16	170	16	170	19	210	16	170	0	16	250	13	350	0.95	0.39	0.21	0.38	2975	3700	4000
	4750	250	300	275	16	170	16	170	19	200	19	220	0	16	240	13	350	0.95	0.40	0.22	0.38	2975	3725	4025
	5250	250	325	300	16	160	16	160	19	200	16	160	0	16	250	13	350	0.95	0.38	0.22	0.37	3000	3750	4050
	5725	275	325	300	16	160	16	160	19	190	19	220	0	16	240	13	350	0.94	0.40	0.22	0.38	3000	3775	4075
	6225	275	350	325	19	220	16	160	19	190	16	170	0	16	250	13	350	0.94	0.37	0.22	0.37	3025	3800	4100
	6700	300	375	325	19	210	16	160	19	180	19	220	0	16	240	13	350	0.94	0.39	0.23	0.37	3025	3825	4150
	7175	325	375	325	19	210	19	220	19	180	19	210	0	16	230	13	350	0.93	0.39	0.26	0.40	3025	3875	4175
	7675	325	400	350	19	200	16	160	19	180	19	220	0	16	240	13	350	0.93	0.39	0.23	0.37	3050	3900	4200
	8150	350	400	350	19	200	19	220	19	170	19	210	0	16	230	13	350	0.93	0.39	0.26	0.39	3050	3925	4225
	8650	350	425	350	19	190	19	210	19	160	19	200	0	16	220	13	350	0.93	0.39	0.26	0.39	3050	3925	4250
	9125	375	425	375	19	190	19	220	19	170	19	210	0	16	230	13	350	0.92	0.38	0.26	0.43	3075	3975	4275
	9625	375	450	375	19	180	19	210	19	160	19	200	0	16	220	13	350	0.92	0.38	0.26	0.43	3075	3975	4300

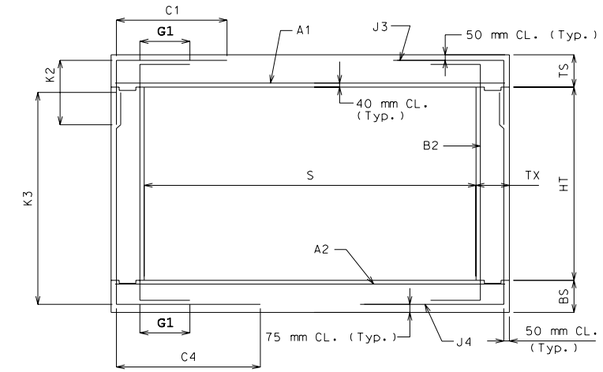

SECTION THRU BOX

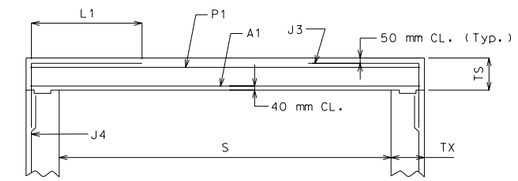

PART SECTION THRU BOX FOR MODIFIED J3 ALTERNATIVE
(B2 BAR NOT SHOWN FOR CLARITY)

NOTE: IF DESIGN FILL FALLS BETWEEN TABULATED FILLS, USE THE ADJACENT TABULATED FILL WHICH YIELDS THE GREATER MEMBER THICKNESS. IF THE MEMBER THICKNESSES ARE EQUAL, USE THE ADJACENT TABULATED FILL WHICH YIELDS THE GREATER AREA OF REINFORCEMENT.

SPECIAL DESIGNS ARE REQUIRED WHEN THE DESIGN FILL IS OUTSIDE THE RANGE OF TABULATED FILLS.

ALL DIMENSIONS ARE IN mm UNLESS OTHERWISE SPECIFIED

COEFFICIENTS: DIMENSIONS MARKED WITH C# OR K# ARE THE PRODUCT OF THE COEFFICIENT AND ITS ASSOCIATED MULTIPLIER.

DESIGN FILL HEIGHT GIVEN IN THE TABLES IS THE HEIGHT FROM THE TOP OF THE EARTH FILL OR ROADWAY TO THE TOP OF THE TOP SLAB.

ALL CULVERTS MEET STRENGTH REQUIREMENTS FOR MILITARY 106 kN TANDEM AXLE LOADING.

AT CONTRACTOR'S OPTION, A MODIFIED J3 ALTERNATIVE MAY BE UTILIZED WHEN THE DISTANCE BETWEEN THE ENDS OF J3 BARS AT TOP SLAB IS LESS THAN 600 mm. J3 BARS WITH HORIZONTAL LENGTH L1 (Instead of C1) MUST BE USED, WHERE L1 IS EQUAL TO 450, 550, AND 700 mm FOR #13, #16, AND #19 BARS, RESPECTIVELY. ADDITIONAL P1 BAR IS REQUIRED WITH THE MODIFIED J3 ALTERNATIVE AND MUST BE OF THE SAME SIZE AND SPACING AS J3 BAR WITH A LENGTH EQUAL TO A1 BAR. NO ADDITIONAL PAYMENT WILL BE MADE FOR THIS SUBSTITUTION.

MISSOURI HIGHWAY AND TRANSPORTATION COMMISSION

CONCRETE SINGLE BOX CULVERT

MEMBER SIZES AND REINFORCEMENT

(MS18 & MS18 MOD LOADING)

Span (S) = 3 m

HT (m) = 2.1 or 2.4 or 2.7

	DESIGN FILL	MEMBER THICKNESSES			TOP SLAB BARS				BOTTOM SLAB BARS				WALL BARS					COEFFICIENTS (see note)				"C" Multiplier	"K" Multiplier		
		TS	BS	TX	A1	Bars	J3	Bars	A2	Bars	J4	Bars	B2	Bars		F	Bars	J4		J3		S = 3.0 m	HT = 2.1 m	HT = 2.4 m	HT = 2.7 m
	(mm)	Thick	Thick.	Thick	Size	c to c	Size	c to c	Size	c to c	Size	c to c	G1	Size	c to c	Size	c to c	K3	C4	K2	C1	mm	mm	mm	mm
MS18	225	275	250	225	19	190	13	180	19	170	16	200	300	16	300	13	350	0.92	0.36	0.29	0.45	3225	2475	2800	3100
	775	225	275	225	19	180	16	180	19	180	13	170	300	16	300	13	350	0.94	0.32	0.32	0.34	3225	2475	2775	3075
	1275	225	250	225	16	180	13	160	19	200	13	160	0	16	300	13	350	0.94	0.30	0.27	0.31	3225	2450	2750	3050
	1775	225	250	225	16	170	16	230	19	190	16	230	0	16	300	13	350	0.94	0.29	0.32	0.30	3225	2450	2750	3050
	2275	225	250	225	16	160	16	210	19	180	16	210	0	16	300	13	350	0.94	0.29	0.32	0.30	3225	2450	2750	3050
MS18 MOD	200	300	250	225	19	170	13	180	22	210	16	190	300	16	300	13	350	0.92	0.36	0.30	0.47	3225	2525	2825	3125
	725	275	300	225	19	170	16	200	19	160	13	170	300	16	300	13	350	0.93	0.32	0.33	0.34	3225	2550	2850	3150
	1275	225	275	225	19	220	16	220	19	170	16	230	0	16	300	13	350	0.94	0.30	0.32	0.32	3225	2450	2750	3075
	1775	225	250	225	16	160	16	220	19	180	16	220	0	16	300	13	350	0.94	0.29	0.32	0.31	3225	2450	2750	3050
	2275	225	275	225	16	160	16	190	19	190	16	230	0	16	300	13	350	0.94	0.28	0.32	0.30	3225	2475	2775	3075
MS18 or MS18 MOD	2775	225	275	225	19	210	16	180	19	180	16	210	0	16	300	13	350	0.94	0.27	0.32	0.30	3225	2475	2775	3075
	3275	225	275	225	16	160	16	190	19	200	16	210	0	16	300	13	350	0.94	0.27	0.32	0.29	3225	2475	2775	3075
	3775	225	275	225	19	200	16	160	19	170	16	190	0	16	300	13	350	0.94	0.27	0.32	0.29	3225	2475	2775	3075
	4250	250	300	225	19	190	16	160	19	170	16	180	0	16	300	13	350	0.93	0.26	0.32	0.28	3225	2525	2825	3125
	4725	275	325	225	19	190	19	220	19	160	16	180	0	16	300	13	350	0.93	0.25	0.33	0.27	3225	2550	2875	3175
	5225	275	325	225	19	170	19	200	22	210	16	160	0	16	300	13	350	0.93	0.25	0.37	0.29	3225	2575	2875	3175
	5700	300	350	225	19	170	19	210	22	210	16	160	0	16	300	13	350	0.92	0.25	0.37	0.28	3225	2625	2925	3225
	6200	300	375	250	22	210	19	200	22	190	16	180	0	16	300	13	350	0.92	0.25	0.37	0.29	3250	2625	2925	3250
	6675	325	375	250	22	210	19	210	22	200	16	160	0	16	300	13	350	0.91	0.25	0.37	0.28	3250	2675	2975	3275
	7150	350	400	250	19	160	19	210	22	200	16	160	0	16	300	13	350	0.91	0.24	0.34	0.28	3250	2725	3025	3325
	7650	350	400	275	22	200	19	210	22	190	16	160	0	16	300	13	350	0.91	0.25	0.37	0.29	3275	2725	3025	3325
	8125	375	425	275	22	200	19	210	22	190	16	160	0	16	300	13	350	0.90	0.25	0.34	0.32	3275	2775	3075	3375
	8625	375	425	275	22	190	19	200	22	180	19	220	0	16	300	13	350	0.90	0.27	0.38	0.32	3275	2775	3075	3375
	9100	400	450	275	22	190	19	200	22	180	19	220	0	16	300	13	350	0.90	0.26	0.34	0.31	3275	2825	3125	3425
	9600	400	475	300	22	180	19	200	22	170	16	170	0	16	300	13	350	0.90	0.25	0.38	0.32	3300	2825	3125	3450

SPAN (S) = 3 m

HT (m) = 3 or 3.3

	DESIGN FILL	MEMBER THICKNESSES			TOP SLAB BARS				BOTTOM SLAB BARS				WALL BARS					COEFFICIENTS (see note)				"C" Multiplier	"K" Multiplier	
		TS	BS	TX	A1	Bars	J3	Bars	A2	Bars	J4	Bars	B2	Bars		F	Bars	J4		J3		S = 3.0 m	HT = 3.0 m	HT = 3.3 m
	(mm)	Thick	Thick.	Thick	Size	c to c	Size	c to c	Size	c to c	Size	c to c	G1	Size	c to c	Size	c to c	K3	C4	K2	C1	mm	mm	mm
MS18	225	275	250	225	19	190	13	160	19	170	16	210	300	16	300	13	350	0.94	0.48	0.21	0.59	3225	3400	3700
	775	225	275	225	19	180	16	190	19	170	16	220	300	16	300	13	350	0.95	0.42	0.23	0.45	3225	3375	3675
	1275	225	250	225	16	170	16	220	19	180	16	200	0	16	300	13	350	0.95	0.37	0.22	0.39	3225	3350	3650
	1775	225	250	225	16	170	16	220	19	180	16	190	0	16	300	13	350	0.95	0.35	0.23	0.36	3225	3350	3650
	2275	225	275	225	16	170	16	190	19	190	16	180	0	16	300	13	350	0.95	0.34	0.23	0.34	3225	3375	3675
MS18 MOD	200	300	275	225	19	160	16	240	19	160	16	200	300	16	300	13	350	0.93	0.51	0.23	0.61	3225	3450	3750
	725	275	300	225	19	170	16	190	22	210	16	220	300	16	300	13	350	0.94	0.42	0.24	0.52	3225	3450	3750
	1275	225	275	225	19	220	16	200	19	170	16	200	0	16	300	13	350	0.95	0.38	0.23	0.39	3225	3375	3675
	1775	225	275	225	16	160	16	200	19	180	16	190	0	16	300	13	350	0.95	0.35	0.23	0.36	3225	3375	3675
	2275	225	275	225	16	160	16	180	19	180	16	180	0	16	300	13	350	0.95	0.34	0.23	0.34	3225	3375	3675
MS18 or MS18 MOD	2775	225	275	225	19	210	16	170	19	170	16	160	0	16	300	13	350	0.95	0.32	0.23	0.33	3225	3375	3675
	3275	225	275	225	16	170	16	170	19	190	16	160	0	16	300	13	350	0.95	0.32	0.23	0.32	3225	3375	3675
	3775	225	300	250	19	210	16	160	19	170	16	170	0	16	300	13	350	0.95	0.31	0.23	0.32	3250	3375	3700
	4250	250	300	250	19	200	19	220	19	170	19	220	0	16	300	13	350	0.94	0.33	0.27	0.32	3250	3425	3725
	4725	275	325	250	19	210	19	210	19	170	19	210	0	16	300	13	350	0.94	0.32	0.25	0.33	3250	3475	3775
	5225	275	350	275	19	190	19	210	19	160	16	160	0	16	300	13	350	0.94	0.30	0.27	0.34	3275	3475	3800
	5700	300	350	275	19	180	19	210	19	160	19	210	0	16	300	13	350	0.93	0.32	0.28	0.33	3275	3525	3825
	6200	300	375	300	19	180	19	210	19	160	19	160	0	16	300	13	350	0.93	0.30	0.27	0.34	3300	3550	3850
	6675	325	375	300	19	170	19	210	22	210	19	210	0	16	300	13	350	0.93	0.32	0.28	0.33	3300	3575	3875
	7150	350	400	300	19	170	19	200	22	210	19	210	0	16	300	13	350	0.92	0.32	0.28	0.33	3300	3625	3925
	7650	350	425	325	19	170	19	210	22	210	19	220	0	16	300	13	350	0.92	0.32	0.28	0.33	3325	3650	3950
	8125	375	425	325	19	160	19	200	22	200	19	210	0	16	300	13	350	0.92	0.32	0.29	0.36	3325	3675	3975
	8625	375	450	325	19	160	19	190	22	200	19	200	0	16	300	13	350	0.92	0.31	0.28	0.36	3325	3700	4000
	9100	400	450	350	19	160	19	200	22	190	19	210	0	16	250	13	350	0.91	0.32	0.29	0.36	3350	3725	4025
	9600	400	475	350	22	210	19	190	22	190	19	210	0	16	300	13	350	0.91	0.32	0.29	0.36	3350	3750	4050

SPAN (S) = 3 m

HT (m) = 3.6 or 3.9

	DESIGN FILL	MEMBER THICKNESSES			TOP SLAB BARS				BOTTOM SLAB BARS				WALL BARS					COEFFICIENTS (see note)				"C" Multiplier	"K" Multiplier	
		TS	BS	TX	A1	Bars	J3	Bars	A2	Bars	J4	Bars	B2	Bars		F	Bars	J4		J3		S = 3.0 m	HT = 3.6 m	HT = 3.9 m
	(mm)	Thick	Thick.	Thick	Size	c to c	Size	c to c	Size	c to c	Size	c to c	G1	Size	c to c	Size	c to c	K3	C4	K2	C1	mm	mm	mm
MS18	225	275	250	250	19	180	16	230	19	160	16	190	300	16	270	13	350	0.95	0.63	0.20	0.61	3250	4000	4300
	775	225	275	250	19	190	16	190	19	160	16	190	300	16	240	13	350	0.96	0.63	0.20	0.61	3250	3975	4275
	1275	225	250	250	16	170	16	220	19	170	16	160	0	16	270	13	350	0.96	0.46	0.20	0.51	3250	3950	4250
	1775	225	250	250	16	180	16	200	19	180	19	210	0	16	250	13	350	0.96	0.44	0.20	0.44	3250	3950	4250
	2275	225	275	250	16	170	16	180	19	190	16	160	0	16	240	13	350	0.96	0.42	0.20	0.41	3250	3975	4275
MS18 MOD	200	300	275	250	19	160	16	220	22	200	16	180	300	16	300	13	350	0.94	0.63	0.21	0.61	3250	4050	4350
	725	275	300	250	19	170	16	180	22	200	16	180	300	16	300	13	350	0.95	0.63	0.21	0.61	3250	4050	4350
	1275	225	275	250	16	160	16	200	19	170	16	180	0	16	270	13	350	0.96	0.50	0.20	0.50	3250	3975	4275
	1775	225	275	250	16	170	16	190	19	180	16	170	0	16	250	13	350	0.96	0.45	0.20	0.44	3250	3975	4275
	2275	225	275	250	16	160	16	180	19	180	19	220	0	16	240	13	350	0.96	0.44	0.20	0.41	3250	3975	4275
MS18 or MS18 MOD	2775	225	300	250	19	220	16	160	19	170	19	210	0	16	220	13	350	0.96	0.43	0.20	0.39	3250	3975	4300
	3275	225	275	275	16	170	16	170	19	190	19	200	0	16	240	13	350	0.96	0.40	0.20	0.38	3275	3975	4275
	3775	225	300	275	16	160	19	210	19	190	19	210	0	16	220	13	350	0.96	0.40	0.21	0.39	3275	4000	4300
	4250	250	325	300	19	220	16	160	19	180	19	220	0	16	240	13	350	0.95	0.39	0.20	0.37	3300	4025	4350
	4725	275	325	300	19	220	16	160	19	180	19	210	0	16	230	13	350	0.95	0.39	0.21	0.37	3300	4075	4375
	5225	275	350	325	19	210	19	220	19	180	19	210	0	16	240	13	350	0.95	0.38	0.22	0.38	3325	4100	4400
	5700	300	375	325	19	200	19	220	19	160	19	200	0	16	230	13	350	0.94	0.38	0.24	0.38	3325	4125	4450
	6200	300	375	325	19	190	19	200	19	160	19	190	0	16	220	13	350	0.94	0.37	0.24	0.38	3325	4150	4450
	6675	325	400	350	19	190	19	210	19	160	19	200	0	16	230	13	350	0.94	0.37	0.24	0.38	3350	4200	4500
	7150	350	400	350	19	180	19	200	19	160	19	190	0	16	220	13	350	0.93	0.37	0.24	0.38	3350	4225	4525
	7650	350	425	375	19	180	19	210	19	160	19	190	0	16	230	13	350	0.93	0.37	0.24	0.37	3375	4250	4550
	8125	375	450	375	19	180	19	190	22	200	19	190	0	16	220	13	350	0.93	0.37	0.25	0.41	3375	4275	4600
	8625	375	450	400	19	170	19	190	22	200	19	190	0	16	230	13	350	0.93	0.36	0.24	0.41	3400	4300	4600
	9100	400	475	400	19	170	19	190	22	200	19	190	0	16	220	13	350	0.92	0.36	0.25	0.41	3400	4325	4650
	9600	400	475	400	19	160	19	180	22	200	19	180	0	16	200	13	350	0.92	0.36	0.25	0.41	3400	4350	4650

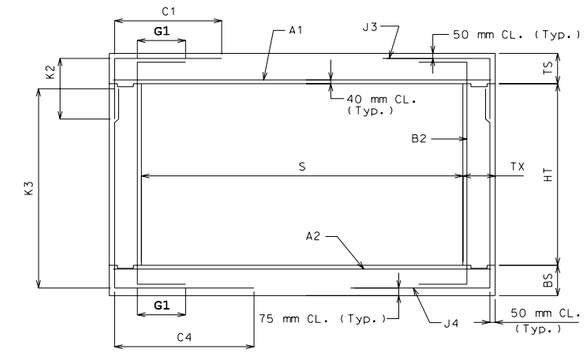

SECTION THRU BOX

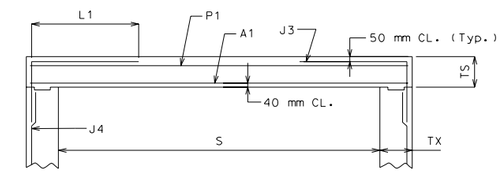

PART SECTION THRU BOX FOR MODIFIED J3 ALTERNATIVE
(B2 BAR NOT SHOWN FOR CLARITY)

NOTE: IF DESIGN FILL FALLS BETWEEN TABULATED FILLS, USE THE ADJACENT TABULATED FILL WHICH YIELDS THE GREATER MEMBER THICKNESS. IF THE MEMBER THICKNESSES ARE EQUAL, USE THE ADJACENT TABULATED FILL WHICH YIELDS THE GREATER AREA OF REINFORCEMENT.

SPECIAL DESIGNS ARE REQUIRED WHEN THE DESIGN FILL IS OUTSIDE THE RANGE OF TABULATED FILLS.

ALL DIMENSIONS ARE IN mm UNLESS OTHERWISE SPECIFIED

COEFFICIENTS: DIMENSIONS MARKED WITH C# OR K# ARE THE PRODUCT OF THE COEFFICIENT AND ITS ASSOCIATED MULTIPLIER.

DESIGN FILL HEIGHT GIVEN IN THE TABLES IS THE HEIGHT FROM THE TOP OF THE EARTH FILL OR ROADWAY TO THE TOP OF THE TOP SLAB.

ALL CULVERTS MEET STRENGTH REQUIREMENTS FOR MILITARY 106 kN TANDEM AXLE LOADING.

AT CONTRACTOR'S OPTION, A MODIFIED J3 ALTERNATIVE MAY BE UTILIZED WHEN THE DISTANCE BETWEEN THE ENDS OF J3 BARS AT TOP SLAB IS LESS THAN 600 mm. J3 BARS WITH HORIZONTAL LENGTH L1 (Instead of C1) MUST BE USED, WHERE L1 IS EQUAL TO 450, 550, AND 700 mm FOR #13, #16, AND #19 BARS, RESPECTIVELY. ADDITIONAL P1 BAR IS REQUIRED WITH THE MODIFIED J3 ALTERNATIVE AND MUST BE OF THE SAME SIZE AND SPACING AS J3 BAR WITH A LENGTH EQUAL TO A1 BAR. NO ADDITIONAL PAYMENT WILL BE MADE FOR THIS SUBSTITUTION.

MISSOURI HIGHWAY AND TRANSPORTATION COMMISSION

CONCRETE SINGLE BOX CULVERT

MEMBER SIZES AND REINFORCEMENT

(MS18 & MS18 MOD LOADING)

DATE: | EFFECTIVE: 04-01-2002 | **M703.15C** | 7/13

| | DESIGN FILL | MEMBER THICKNESSES | | | Span (S) = 3.3 m; HT (m) = 2.4 or 2.7 or 3 | | |

Span (S) = 3.6 m; HT (m) = 2.7 or 3 or 3.3

Design Fill	(mm)	TS Thick	BS Thick.	TX Thick	Top Slab Bars A1 Size	A1 Bars c to c	J3 Size	J3 Bars c to c	Bottom Slab Bars A2 Size	A2 Bars c to c	J4 Size	J4 Bars c to c	Wall Bars G1	B2 Size	B2 Bars c to c	F Size	F Bars c to c	Coefficients (see note) J4 K3	J4 C4	J3 K2	J3 C1	"C" Multiplier S = 3.6 m (mm)	"K" Multiplier HT = 2.7 m (mm)	HT = 3.0 m (mm)	HT = 3.3 m (mm)
MS18	225	275	250	225	19	160	16	200	22	190	16	170	300	16	300	13	350	0.94	0.37	0.27	0.58	3825	3100	3400	3700
	725	275	275	225	22	200	16	170	22	190	16	170	300	16	300	13	350	0.94	0.32	0.27	0.35	3825	3125	3425	3725
	1275	225	275	225	19	180	16	160	22	200	16	180	0	16	300	13	350	0.95	0.30	0.26	0.31	3825	3075	3375	3675
	1775	225	275	225	19	180	16	160	22	200	16	160	0	16	300	13	350	0.95	0.28	0.26	0.30	3825	3075	3375	3675
	2275	225	300	225	19	170	19	200	22	200	16	160	0	16	300	13	350	0.95	0.27	0.29	0.31	3825	3100	3400	3700
MS18 MOD	175	325	275	225	22	210	16	220	22	180	16	160	300	16	300	13	350	0.93	0.37	0.28	0.59	3825	3175	3475	3775
	700	300	300	225	22	180	16	160	22	170	16	170	300	16	300	13	350	0.93	0.32	0.27	0.36	3825	3175	3475	3775
	1250	250	300	225	19	170	16	160	22	190	16	180	0	16	300	13	350	0.94	0.30	0.26	0.31	3825	3100	3400	3725
	1775	225	300	225	19	170	19	210	22	200	16	170	0	16	300	13	350	0.95	0.28	0.29	0.31	3825	3100	3400	3700
	2250	250	300	225	19	170	19	210	22	190	19	220	0	16	300	13	350	0.94	0.29	0.27	0.30	3825	3125	3425	3725
MS18 or MS18 MOD	2750	250	300	225	19	160	19	190	22	180	19	200	0	16	300	13	350	0.94	0.28	0.29	0.30	3825	3125	3425	3725
	3225	275	325	225	19	160	19	180	22	180	19	190	0	16	300	13	350	0.94	0.27	0.30	0.28	3825	3175	3475	3775
	3725	275	350	225	22	200	19	160	22	180	19	190	0	16	300	13	350	0.94	0.26	0.30	0.28	3825	3200	3500	3800
	4225	275	350	250	22	210	19	170	22	190	19	210	0	16	300	13	350	0.94	0.26	0.30	0.29	3850	3200	3500	3800
	4700	300	350	250	22	200	19	170	22	170	19	180	0	16	300	13	350	0.93	0.26	0.30	0.28	3850	3225	3525	3825
	5175	325	375	275	22	190	19	180	22	170	19	190	0	16	300	13	350	0.93	0.26	0.30	0.28	3875	3275	3575	3875
	5650	350	400	275	22	190	19	180	22	170	19	190	0	16	300	13	350	0.92	0.26	0.31	0.27	3875	3325	3625	3925
	6150	350	425	275	22	180	19	160	22	160	19	190	0	16	300	13	350	0.92	0.25	0.31	0.27	3875	3325	3650	3950
	6625	375	450	300	22	180	19	170	22	160	19	200	0	16	300	13	350	0.92	0.26	0.31	0.31	3900	3375	3675	4000
	7100	400	450	300	22	170	19	170	22	160	19	180	0	16	300	13	350	0.91	0.26	0.31	0.30	3900	3425	3725	4025
	7600	400	475	300	22	170	19	160	22	160	19	180	0	16	300	13	350	0.91	0.25	0.31	0.30	3900	3450	3750	4050
	8075	425	500	325	22	160	19	170	25	200	19	190	0	16	300	13	350	0.91	0.25	0.32	0.30	3925	3475	3775	4100
	8550	450	500	325	22	160	19	170	25	200	19	180	0	16	290	13	350	0.90	0.26	0.32	0.30	3925	3525	3825	4125
	9050	450	525	325	22	160	19	160	25	200	19	180	0	16	300	13	350	0.90	0.25	0.32	0.30	3925	3550	3850	4150
	9525	475	550	350	22	160	19	170	25	190	19	190	0	16	290	13	350	0.90	0.25	0.32	0.30	3950	3575	3875	4200

SPAN (S) = 3.6 m; HT (m) = 3.6 or 3.9

Design Fill	(mm)	TS Thick	BS Thick.	TX Thick	Top Slab Bars A1 Size	A1 Bars c to c	J3 Size	J3 Bars c to c	Bottom Slab Bars A2 Size	A2 Bars c to c	J4 Size	J4 Bars c to c	Wall Bars G1	B2 Size	B2 Bars c to c	F Size	F Bars c to c	Coefficients (see note) J4 K3	J4 C4	J3 K2	J3 C1	"C" Multiplier S = 3.6 m (mm)	"K" Multiplier HT = 3.6 m (mm)	HT = 3.9 m (mm)
MS18	225	275	250	250	19	160	16	190	22	190	16	160	300	16	280	13	350	0.95	0.45	0.21	0.60	3850	4000	4300
	725	275	300	250	19	160	16	160	22	190	16	170	300	16	300	13	350	0.95	0.40	0.21	0.49	3850	4050	4350
	1275	225	275	250	19	180	16	170	22	200	16	160	0	16	300	13	350	0.96	0.36	0.20	0.37	3850	3975	4275
	1775	225	300	250	19	190	16	160	22	200	19	220	0	16	300	13	350	0.96	0.36	0.20	0.34	3850	3975	4300
	2275	225	300	250	19	180	19	210	22	190	19	200	0	16	290	13	350	0.96	0.34	0.22	0.35	3850	4000	4300
MS18 MOD	175	325	275	250	22	200	16	200	22	180	19	220	300	16	300	13	350	0.94	0.48	0.22	0.60	3850	4075	4375
	700	300	325	250	22	190	19	220	22	180	16	160	300	16	300	13	350	0.94	0.42	0.22	0.55	3850	4100	4400
	1250	250	300	250	19	180	16	160	22	190	16	160	0	16	300	13	350	0.95	0.37	0.20	0.38	3850	4025	4325
	1750	250	300	250	19	180	19	220	22	190	19	210	0	16	300	13	350	0.95	0.36	0.21	0.36	3850	4025	4325
	2250	250	300	250	19	180	19	210	22	190	19	190	0	16	290	13	350	0.95	0.34	0.23	0.35	3850	4025	4325
MS18 or MS18 MOD	2750	250	325	250	19	170	19	190	22	190	19	190	0	16	270	13	350	0.95	0.33	0.23	0.34	3850	4050	4350
	3225	275	325	275	19	170	19	190	22	190	19	190	0	16	300	13	350	0.95	0.32	0.23	0.33	3875	4075	4375
	3725	275	350	275	22	210	19	170	22	180	19	180	0	16	290	13	350	0.95	0.31	0.23	0.32	3875	4100	4400
	4225	275	350	300	19	170	19	190	22	200	19	190	0	16	300	13	350	0.95	0.31	0.23	0.32	3900	4100	4400
	4700	300	375	300	19	160	19	180	22	190	19	180	0	16	300	13	350	0.94	0.31	0.24	0.32	3900	4150	4450
	5175	325	400	300	19	160	19	180	22	180	19	180	0	16	270	13	350	0.94	0.30	0.24	0.32	3900	4175	4500
	5650	350	400	325	22	210	19	180	22	180	19	180	0	16	300	13	350	0.93	0.30	0.24	0.31	3925	4225	4525
	6150	350	425	325	22	200	19	160	22	170	19	170	0	16	280	13	350	0.93	0.30	0.24	0.31	3925	4250	4550
	6625	375	450	350	22	200	19	170	22	170	19	180	0	16	280	13	350	0.93	0.30	0.24	0.34	3950	4300	4600
	7100	400	475	350	22	190	19	170	22	170	19	170	0	16	270	13	350	0.92	0.30	0.25	0.34	3950	4325	4650
	7600	400	475	375	22	180	19	160	22	160	19	170	0	16	300	13	350	0.92	0.30	0.25	0.34	3975	4350	4650
	8075	425	500	375	22	180	19	160	22	160	19	170	0	16	250	13	350	0.92	0.30	0.25	0.34	3975	4400	4700
	8550	450	525	375	22	180	19	160	22	160	19	170	0	16	250	13	350	0.92	0.30	0.25	0.34	3975	4425	4750
	9050	450	525	400	22	170	19	170	22	160	19	170	0	16	260	13	350	0.92	0.30	0.25	0.34	4000	4450	4750
	9525	475	550	400	22	170	19	160	25	200	19	160	0	16	230	13	350	0.91	0.30	0.26	0.34	4000	4500	4800

SPAN (S) = 3.6 m; HT (m) = 4.2 or 4.5

Design Fill	(mm)	TS Thick	BS Thick.	TX Thick	Top Slab Bars A1 Size	A1 Bars c to c	J3 Size	J3 Bars c to c	Bottom Slab Bars A2 Size	A2 Bars c to c	J4 Size	J4 Bars c to c	Wall Bars G1	B2 Size	B2 Bars c to c	F Size	F Bars c to c	Coefficients (see note) J4 K3	J4 C4	J3 K2	J3 C1	"C" Multiplier S = 3.6 m (mm)	"K" Multiplier HT = 4.2 m (mm)	HT = 4.5 m (mm)
MS18	225	275	275	275	19	160	16	180	22	190	19	220	300	16	240	13	350	0.95	0.63	0.18	0.60	3875	4625	4925
	725	275	300	275	19	160	16	160	22	190	19	220	300	16	240	13	350	0.95	0.58	0.18	0.60	3875	4650	4950
	1275	225	275	275	19	190	19	210	22	190	19	180	0	16	210	13	350	0.96	0.46	0.19	0.46	3875	4575	4875
	1775	225	300	275	19	190	19	190	22	200	19	190	0	16	200	13	350	0.96	0.44	0.20	0.41	3875	4600	4900
	2275	225	300	275	19	180	19	180	22	190	19	180	0	16	190	13	350	0.96	0.41	0.20	0.39	3875	4600	4900
MS18 MOD	175	325	275	275	22	200	16	180	22	170	19	210	300	16	250	13	350	0.94	0.63	0.19	0.60	3875	4675	4975
	700	300	325	275	22	190	19	210	22	170	19	210	300	16	240	13	350	0.95	0.63	0.20	0.61	3875	4700	5000
	1250	250	300	275	19	180	16	160	22	190	19	210	0	16	220	13	350	0.96	0.48	0.18	0.48	3875	4625	4925
	1750	250	300	275	19	180	19	220	22	190	19	190	0	16	200	13	350	0.96	0.43	0.19	0.43	3875	4625	4925
	2250	250	325	275	19	180	19	200	22	190	19	180	0	16	190	13	350	0.96	0.42	0.20	0.41	3875	4625	4950
MS18 or MS18 MOD	2750	250	325	300	19	170	19	190	22	190	19	180	0	16	200	13	350	0.96	0.39	0.20	0.38	3900	4650	4950
	3225	275	350	300	19	170	19	180	22	190	19	170	0	16	190	13	350	0.95	0.38	0.20	0.38	3900	4700	5000
	3725	275	350	325	19	170	19	180	22	190	19	180	0	16	200	13	350	0.95	0.37	0.20	0.37	3925	4700	5000
	4225	275	350	325	19	170	19	180	22	190	19	170	0	16	190	13	350	0.95	0.36	0.20	0.36	3925	4700	5000
	4700	300	375	350	19	170	19	180	22	190	19	180	0	16	200	13	350	0.95	0.36	0.21	0.36	3950	4750	5050
	5175	325	400	350	19	170	19	180	22	190	19	160	0	16	190	13	350	0.95	0.35	0.21	0.36	3950	4800	5100
	5650	350	425	375	19	170	19	180	22	190	19	170	0	16	200	13	350	0.94	0.35	0.21	0.35	3975	4850	5150
	6150	350	425	375	22	210	19	170	22	180	19	160	0	16	190	13	350	0.94	0.34	0.21	0.35	3975	4850	5150
	6625	375	450	400	22	210	19	180	22	180	19	160	0	16	200	13	350	0.94	0.34	0.22	0.38	4000	4900	5200
	7100	400	475	400	22	200	19	170	22	180	19	160	0	16	190	13	350	0.93	0.34	0.22	0.38	4000	4950	5250
	7600	400	500	425	22	200	19	170	22	170	19	160	0	16	200	13	350	0.93	0.34	0.22	0.38	4025	4950	5275
	8075	425	500	425	22	190	19	160	22	170	19	160	0	16	190	13	350	0.93	0.34	0.22	0.38	4025	5000	5300
	8550	450	525	450	22	190	19	160	22	170	19	160	0	16	190	13	350	0.93	0.34	0.22	0.38	4050	5050	5350
	9050	450	550	450	22	180	19	160	22	160	19	160	0	16	180	13	350	0.93	0.34	0.22	0.38	4050	5050	5375
	9525	475	550	475	22	180	22	210	22	160	22	210	0	16	190	13	350	0.92	0.34	0.26	0.39	4075	5100	5400

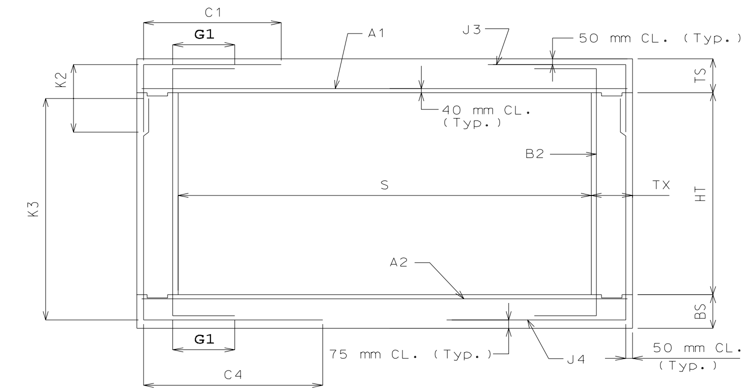

SECTION THRU BOX

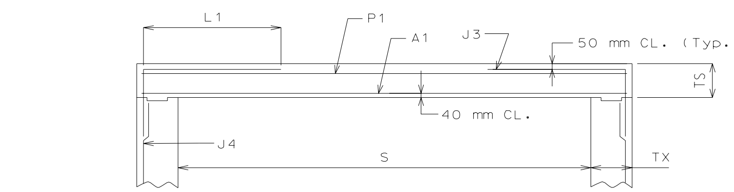

PART SECTION THRU BOX FOR MODIFIED J3 ALTERNATIVE
(B2 BAR NOT SHOWN FOR CLARITY)

NOTE: IF DESIGN FILL FALLS BETWEEN TABULATED FILLS, USE THE ADJACENT TABULATED FILL WHICH YIELDS THE GREATER MEMBER THICKNESS. IF THE MEMBER THICKNESSES ARE EQUAL, USE THE ADJACENT TABULATED FILL WHICH YIELDS THE GREATER AREA OF REINFORCEMENT.

SPECIAL DESIGNS ARE REQUIRED WHEN THE DESIGN FILL IS OUTSIDE THE RANGE OF TABULATED FILLS.

ALL DIMENSIONS ARE IN mm UNLESS OTHERWISE SPECIFIED

COEFFICIENTS: DIMENSIONS MARKED WITH C# OR K# ARE THE PRODUCT OF THE COEFFICIENT AND ITS ASSOCIATED MULTIPLIER.

DESIGN FILL HEIGHT GIVEN IN THE TABLES IS THE HEIGHT FROM THE TOP OF THE EARTH FILL OR ROADWAY TO THE TOP OF THE TOP SLAB.

ALL CULVERTS MEET STRENGTH REQUIREMENTS FOR MILITARY 106 kN TANDEM AXLE LOADING.

AT CONTRACTOR'S OPTION, A MODIFIED J3 ALTERNATIVE MAY BE UTILIZED WHEN THE DISTANCE BETWEEN THE ENDS OF J3 BARS AT TOP SLAB IS LESS THAN 600 mm. J3 BARS WITH HORIZONTAL LENGTH L1 (Instead of C1) MUST BE USED, WHERE L1 IS EQUAL TO 450, 550, AND 700 mm FOR #13, #16, AND #19 BARS, RESPECTIVELY. ADDITIONAL P1 BAR IS REQUIRED WITH THE MODIFIED J3 ALTERNATIVE AND MUST BE OF THE SAME SIZE AND SPACING AS J3 BAR WITH A LENGTH EQUAL TO A1 BAR. NO ADDITIONAL PAYMENT WILL BE MADE FOR THIS SUBSTITUTION.

MISSOURI HIGHWAY AND TRANSPORTATION COMMISSION		
CONCRETE SINGLE BOX CULVERT MEMBER SIZES AND REINFORCEMENT (MS18 & MS18 MOD LOADING)		
DATE:	EFFECTIVE: 04-01-2002	M703.15C

Span (S) = 3.9 m

HT (m) = 3 or 3.3 or 3.6

	DESIGN FILL	MEMBER THICKNESSES			TOP SLAB BARS				BOTTOM SLAB BARS				WALL BARS					COEFFICIENTS (see note)				"C" Multiplier	"K" Multiplier		
		TS	BS	TX	A1	Bars	J3	Bars	A2	Bars	J4	Bars		B2	Bars	F	Bars	J4		J3		S = 3.9 m	HT = 3.0 m	HT = 3.3 m	HT = 3.6 m
	(mm)	Thick	Thick.	Thick	Size	c to c	Size	c to c	Size	c to c	Size	c to c	G1	Size	c to c	Size	c to c	K3	C4	K2	C1	mm	mm	mm	mm
MS18	225	275	250	250	22	200	16	180	22	180	19	220	300	16	300	13	350	0.94	0.37	0.25	0.54	4150	3400	3700	4000
	725	275	300	250	22	180	19	210	22	180	16	170	300	16	300	13	350	0.94	0.32	0.27	0.37	4150	3450	3750	4050
	1250	250	275	250	19	170	16	160	22	190	16	160	0	16	300	13	350	0.95	0.30	0.24	0.30	4150	3400	3700	4000
	1750	250	300	250	19	170	19	210	22	190	19	220	0	16	300	13	350	0.95	0.30	0.27	0.29	4150	3425	3725	4025
	2250	250	300	250	19	160	19	190	22	180	19	200	0	16	300	13	350	0.95	0.29	0.27	0.30	4150	3425	3725	4025
MS18 MOD	175	325	275	250	22	190	16	190	22	170	19	210	300	16	300	13	350	0.93	0.38	0.26	0.59	4150	3475	3775	4075
	675	325	325	250	22	170	16	160	22	170	16	160	300	16	300	13	350	0.93	0.32	0.25	0.36	4150	3525	3825	4125
	1250	250	300	250	22	200	19	200	22	180	16	160	0	16	300	13	350	0.95	0.30	0.27	0.32	4150	3425	3725	4025
	1750	250	300	250	22	210	19	190	22	170	19	210	0	16	300	13	350	0.95	0.30	0.27	0.31	4150	3425	3725	4025
	2250	250	325	250	22	200	19	180	22	180	19	210	0	16	300	13	350	0.95	0.28	0.27	0.30	4150	3450	3750	4050
MS18 MOD or MS18	2725	275	325	250	22	200	19	180	22	170	19	190	0	16	300	13	350	0.94	0.28	0.27	0.29	4150	3475	3775	4075
	3225	275	350	250	22	190	19	160	22	170	19	190	0	16	300	13	350	0.94	0.27	0.27	0.29	4150	3500	3800	4100
	3700	300	375	250	22	180	19	160	22	160	19	170	0	16	300	13	350	0.94	0.26	0.28	0.28	4150	3525	3825	4150
	4200	300	375	275	22	190	19	160	22	160	19	180	0	16	300	13	350	0.94	0.26	0.28	0.28	4175	3525	3825	4150
	4675	325	375	275	22	180	19	160	22	160	19	170	0	16	300	13	350	0.93	0.26	0.28	0.27	4175	3575	3875	4175
	5150	350	400	300	22	180	19	170	22	160	19	180	0	16	300	13	350	0.93	0.26	0.28	0.28	4200	3625	3925	4225
	5625	375	425	300	22	180	19	170	22	160	19	180	0	16	300	13	350	0.92	0.26	0.29	0.30	4200	3675	3975	4275
	6125	375	450	300	22	160	22	210	25	190	19	170	0	16	300	13	350	0.92	0.25	0.31	0.33	4200	3675	4000	4300
	6600	400	475	325	22	160	19	160	25	190	19	180	0	16	300	13	350	0.92	0.25	0.29	0.30	4225	3725	4050	4350
	7075	425	475	325	22	160	19	160	25	190	19	170	0	16	290	13	350	0.91	0.25	0.29	0.29	4225	3775	4075	4375
	7550	450	500	350	22	160	19	160	25	190	19	170	0	16	300	13	350	0.91	0.26	0.29	0.30	4250	3825	4125	4425
	8050	450	525	350	25	200	22	210	25	190	19	170	0	16	290	13	350	0.91	0.25	0.29	0.32	4250	3850	4150	4450
	8525	475	550	350	25	200	22	210	25	180	19	170	0	16	260	13	350	0.90	0.25	0.30	0.32	4250	3875	4175	4500
	9000	500	550	375	25	190	19	160	25	180	19	170	0	16	290	13	350	0.90	0.25	0.30	0.29	4275	3925	4225	4525
	9500	500	575	375	25	190	22	200	25	180	19	170	0	16	270	13	350	0.90	0.25	0.32	0.32	4275	3950	4250	4550

SPAN (S) = 3.9 m

HT (m) = 3.9 or 4.2

	DESIGN FILL	MEMBER THICKNESSES			TOP SLAB BARS				BOTTOM SLAB BARS				WALL BARS					COEFFICIENTS (see note)				"C" Multiplier	"K" Multiplier	
		TS	BS	TX	A1	Bars	J3	Bars	A2	Bars	J4	Bars		B2	Bars	F	Bars	J4		J3		S = 3.9 m	HT = 3.9 m	HT = 4.2 m
	(mm)	Thick	Thick.	Thick	Size	c to c	Size	c to c	Size	c to c	Size	c to c	G1	Size	c to c	Size	c to c	K3	C4	K2	C1	mm	mm	mm
MS18	225	275	275	275	22	200	16	170	22	190	16	160	300	16	300	13	350	0.95	0.44	0.19	0.59	4175	4325	4625
	725	275	300	275	22	190	19	210	22	180	19	220	300	16	300	13	350	0.95	0.40	0.22	0.47	4175	4350	4650
	1250	250	300	275	19	170	16	160	22	180	19	210	0	16	290	13	350	0.96	0.37	0.19	0.37	4175	4300	4625
	1750	250	300	275	19	170	19	210	22	180	19	200	0	16	290	13	350	0.96	0.35	0.21	0.34	4175	4325	4625
	2250	250	325	275	19	160	19	190	22	170	19	180	0	16	270	13	350	0.96	0.33	0.21	0.34	4175	4325	4650
MS18 MOD	175	325	300	275	22	190	16	180	22	170	19	200	300	16	300	13	350	0.94	0.48	0.20	0.59	4175	4375	4700
	675	325	325	275	22	170	19	220	22	170	19	210	300	16	300	13	350	0.94	0.41	0.23	0.57	4175	4425	4725
	1250	250	300	275	22	200	19	200	22	170	19	210	0	16	290	13	350	0.96	0.37	0.21	0.38	4175	4325	4625
	1750	250	325	275	19	160	19	200	22	180	19	200	0	16	280	13	350	0.96	0.35	0.21	0.36	4175	4350	4650
	2250	250	325	275	22	210	19	180	22	170	19	190	0	16	270	13	350	0.96	0.33	0.21	0.34	4175	4350	4650
MS18 MOD or MS18	2725	275	350	275	22	210	19	180	22	170	19	170	0	16	260	13	350	0.95	0.32	0.22	0.33	4175	4375	4700
	3225	275	350	275	22	200	19	170	22	170	19	160	0	16	250	13	350	0.95	0.31	0.22	0.32	4175	4400	4700
	3700	300	375	300	22	200	19	170	22	170	19	170	0	16	270	13	350	0.95	0.31	0.22	0.32	4200	4450	4750
	4200	300	375	300	22	210	19	160	22	180	19	160	0	16	260	13	350	0.95	0.30	0.22	0.31	4200	4450	4750
	4675	325	400	325	22	210	19	170	22	180	19	170	0	16	280	13	350	0.94	0.30	0.22	0.31	4225	4500	4800
	5150	350	425	325	22	190	19	160	22	160	19	160	0	16	250	13	350	0.94	0.30	0.23	0.31	4225	4525	4850
	5625	375	425	350	22	190	19	160	22	160	19	160	0	16	290	13	350	0.94	0.30	0.23	0.32	4250	4575	4850
	6125	375	450	350	22	180	22	210	22	160	19	160	0	16	260	13	350	0.93	0.29	0.27	0.35	4250	4600	4900
	6600	400	475	375	22	180	19	160	22	160	19	160	0	16	250	13	350	0.93	0.29	0.23	0.33	4275	4650	4950
	7075	425	500	375	22	180	22	210	22	160	19	160	0	16	250	13	350	0.92	0.29	0.27	0.36	4275	4700	5000
	7550	450	525	400	22	170	19	160	25	200	19	160	0	16	250	13	350	0.92	0.30	0.28	0.34	4300	4725	5050
	8050	450	525	400	22	170	22	210	25	190	22	210	0	16	240	13	350	0.92	0.32	0.28	0.36	4300	4750	5050
	8525	475	550	425	22	160	22	200	25	190	19	160	0	16	200	13	350	0.92	0.29	0.28	0.36	4325	4800	5100
	9000	500	575	425	22	160	22	210	25	190	22	210	0	16	220	13	350	0.91	0.31	0.28	0.36	4325	4850	5150
	9500	500	575	425	25	200	22	200	25	180	22	200	0	16	220	13	350	0.91	0.31	0.28	0.36	4325	4850	5150

SPAN (S) = 3.9 m

HT (m) = 4.5 or 4.8

	DESIGN FILL	MEMBER THICKNESSES			TOP SLAB BARS				BOTTOM SLAB BARS				WALL BARS					COEFFICIENTS (see note)				"C" Multiplier	"K" Multiplier	
		TS	BS	TX	A1	Bars	J3	Bars	A2	Bars	J4	Bars		B2	Bars	F	Bars	J4		J3		S = 3.9 m	HT = 4.5 m	HT = 4.8 m
	(mm)	Thick	Thick.	Thick	Size	c to c	Size	c to c	Size	c to c	Size	c to c	G1	Size	c to c	Size	c to c	K3	C4	K2	C1	mm	mm	mm
MS18	225	275	275	300	22	200	16	170	22	180	19	190	300	16	220	13	350	0.96	0.60	0.17	0.59	4200	4925	5225
	725	275	300	300	22	190	19	210	22	170	19	180	300	16	220	13	350	0.96	0.50	0.19	0.61	4200	4950	5250
	1250	250	300	300	19	170	19	210	22	190	19	180	0	16	200	13	350	0.96	0.44	0.19	0.46	4200	4925	5225
	1750	250	325	300	19	170	19	190	22	180	19	180	0	16	190	13	350	0.96	0.42	0.19	0.41	4200	4925	5250
	2250	250	325	300	19	170	19	180	22	180	19	170	0	16	180	13	350	0.96	0.40	0.19	0.39	4200	4950	5250
MS18 MOD	175	325	300	300	22	190	16	160	22	170	19	200	300	16	240	13	350	0.95	0.63	0.18	0.59	4200	5000	5300
	700	300	325	300	22	170	19	190	22	160	19	190	300	16	220	13	350	0.95	0.52	0.20	0.61	4200	5000	5300
	1250	250	325	300	22	210	19	190	22	170	19	190	0	16	200	13	350	0.96	0.47	0.19	0.45	4200	4925	5250
	1750	250	325	300	19	160	19	180	22	170	19	180	0	16	190	13	350	0.96	0.42	0.19	0.41	4200	4950	5250
	2250	250	325	300	19	160	19	170	22	170	19	170	0	16	180	13	350	0.96	0.40	0.19	0.39	4200	4950	5250
MS18 MOD or MS18	2725	275	350	300	19	160	19	180	22	170	22	210	0	16	180	13	350	0.96	0.41	0.19	0.38	4200	5000	5300
	3225	275	375	325	22	210	19	160	22	170	19	160	0	16	180	13	350	0.96	0.37	0.19	0.36	4225	5000	5325
	3700	300	375	350	19	160	19	170	22	170	19	160	0	16	190	13	350	0.95	0.36	0.19	0.36	4250	5050	5350
	4175	325	400	350	22	210	19	170	22	170	22	210	0	16	180	13	350	0.95	0.38	0.20	0.36	4250	5100	5400
	4675	325	400	375	19	160	19	180	22	180	19	160	0	16	190	13	350	0.95	0.35	0.20	0.35	4275	5100	5400
	5150	350	425	375	22	210	19	170	22	170	22	210	0	16	180	13	350	0.95	0.37	0.20	0.35	4275	5150	5450
	5650	350	450	400	22	200	19	160	22	170	19	160	0	16	190	13	350	0.95	0.34	0.20	0.34	4300	5175	5475
	6125	375	475	400	22	190	19	160	22	160	22	200	0	16	180	13	350	0.94	0.36	0.20	0.37	4300	5200	5525
	6600	400	475	425	22	190	19	160	22	160	22	210	0	16	190	13	350	0.94	0.36	0.21	0.37	4325	5250	5550
	7075	425	500	425	22	190	22	210	22	160	22	200	0	16	180	13	350	0.93	0.35	0.24	0.39	4325	5300	5600
	7550	450	525	450	22	190	19	160	22	160	22	200	0	16	180	13	350	0.93	0.35	0.21	0.36	4350	5350	5650
	8050	450	550	450	22	180	22	200	25	200	22	200	0	16	180	13	350	0.93	0.35	0.24	0.39	4350	5375	5675
	8525	475	550	475	22	170	22	210	25	200	22	200	0	16	180	13	350	0.93	0.35	0.25	0.39	4375	5400	5700
	9000	500	575	475	22	170	22	200	25	200	22	190	0	16	180	13	350	0.92	0.35	0.25	0.39	4375	5450	5750
	9500	500	600	500	22	170	22	200	25	190	22	200	0	16	180	13	350	0.92	0.35	0.25	0.39	4400	5475	5775

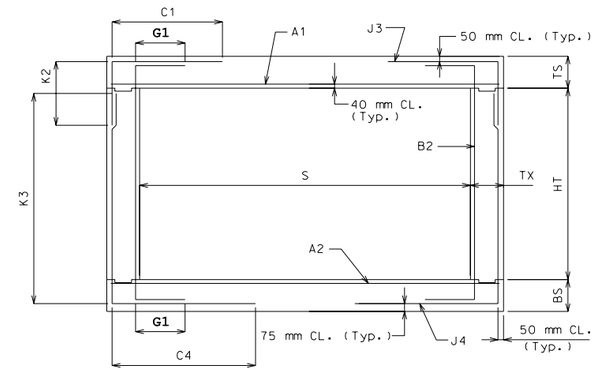

SECTION THRU BOX

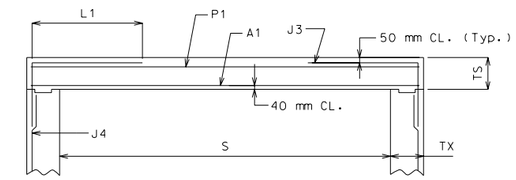

PART SECTION THRU BOX FOR MODIFIED J3 ALTERNATIVE
(B2 BAR NOT SHOWN FOR CLARITY)

NOTE: IF DESIGN FILL FALLS BETWEEN TABULATED FILLS, USE THE ADJACENT TABULATED FILL WHICH YIELDS THE GREATER MEMBER THICKNESS. IF THE MEMBER THICKNESSES ARE EQUAL, USE THE ADJACENT TABULATED FILL WHICH YIELDS THE GREATER AREA OF REINFORCEMENT.

SPECIAL DESIGNS ARE REQUIRED WHEN THE DESIGN FILL IS OUTSIDE THE RANGE OF TABULATED FILLS.

ALL DIMENSIONS ARE IN mm UNLESS OTHERWISE SPECIFIED

COEFFICIENTS: DIMENSIONS MARKED WITH C# OR K# ARE THE PRODUCT OF THE COEFFICIENT AND ITS ASSOCIATED MULTIPLIER.

DESIGN FILL HEIGHT GIVEN IN THE TABLES IS THE HEIGHT FROM THE TOP OF THE EARTH FILL OR ROADWAY TO THE TOP OF THE TOP SLAB.

ALL CULVERTS MEET STRENGTH REQUIREMENTS FOR MILITARY 106 kN TANDEM AXLE LOADING.

AT CONTRACTOR'S OPTION, A MODIFIED J3 ALTERNATIVE MAY BE UTILIZED WHEN THE DISTANCE BETWEEN THE ENDS OF J3 BARS AT TOP SLAB IS LESS THAN 600 mm. J3 BARS WITH HORIZONTAL LENGTH L1 (Instead of C1) MUST BE USED, WHERE L1 IS EQUAL TO 450, 550, AND 700 mm FOR #13, #16, AND #19 BARS, RESPECTIVELY. ADDITIONAL P1 BAR IS REQUIRED WITH THE MODIFIED J3 ALTERNATIVE AND MUST BE OF THE SAME SIZE AND SPACING AS J3 BAR WITH A LENGTH EQUAL TO A1 BAR. NO ADDITIONAL PAYMENT WILL BE MADE FOR THIS SUBSTITUTION.

MISSOURI HIGHWAY AND TRANSPORTATION COMMISSION

CONCRETE SINGLE BOX CULVERT

MEMBER SIZES AND REINFORCEMENT

(MS18 & MS18 MOD LOADING)

DATE:	EFFECTIVE: 04-01-2002	M703.15C	10/13

Span (S) = 4.2 m
HT (m) = 3.3 or 3.6

	DESIGN FILL	MEMBER THICKNESSES			TOP SLAB BARS				BOTTOM SLAB BARS				WALL BARS					COEFFICIENTS (see note)				"C" Multiplier	"K" Multiplier	
		TS	BS	TX	A1	Bars	J3	Bars	A2	Bars	J4	Bars	B2	Bars		F	Bars	J4		J3		S = 4.2 m	HT = 3.3 m	HT = 3.6 m
	(mm)	Thick	Thick.	Thick	Size	c to c	Size	c to c	Size	c to c	Size	c to c	G1	Size	c to c	Size	c to c	K3	C4	K2	C1	mm	mm	mm
MS18	225	275	325	250	22	200	19	210	22	190	19	210	300	16	300	13	350	0.94	0.37	0.25	0.43	4450	3775	4075
MS18	725	275	300	250	22	160	19	190	22	170	19	220	300	16	300	13	350	0.94	0.31	0.25	0.33	4450	3750	4050
MS18	1250	250	300	250	22	200	19	190	22	180	16	160	0	16	300	13	350	0.95	0.27	0.25	0.30	4450	3725	4025
MS18	1750	250	300	250	22	190	19	180	22	160	19	200	0	16	300	13	350	0.95	0.28	0.25	0.29	4450	3725	4025
MS18	2250	250	325	250	22	190	19	160	22	160	19	200	0	16	300	13	350	0.95	0.26	0.25	0.29	4450	3750	4050
MS18 MOD	175	325	375	250	22	190	16	160	22	190	19	220	300	16	300	13	350	0.93	0.37	0.23	0.47	4450	3875	4175
MS18 MOD	675	325	325	250	25	200	19	210	22	160	19	210	300	16	300	13	350	0.93	0.31	0.26	0.33	4450	3825	4125
MS18 MOD	1225	275	300	250	22	190	19	190	22	160	19	210	0	16	300	13	350	0.94	0.29	0.25	0.30	4450	3750	4050
MS18 MOD	1725	275	325	250	22	190	19	180	22	160	19	210	0	16	300	13	350	0.94	0.27	0.25	0.29	4450	3775	4075
MS18 MOD	2225	275	325	250	22	180	19	170	22	160	19	190	0	16	300	13	350	0.94	0.26	0.25	0.28	4450	3775	4075
MS18 or MS18 MOD	2725	275	350	250	22	170	22	210	22	160	19	190	0	16	300	13	350	0.94	0.25	0.30	0.28	4450	3800	4100
MS18 or MS18 MOD	3200	300	375	250	22	170	22	210	25	190	19	170	0	16	300	13	350	0.94	0.24	0.30	0.27	4450	3825	4150
MS18 or MS18 MOD	3675	325	375	250	22	170	22	200	25	190	19	160	0	16	300	13	350	0.93	0.24	0.30	0.28	4450	3875	4175
MS18 or MS18 MOD	4150	350	400	275	22	170	19	160	25	200	19	170	0	16	300	13	350	0.93	0.24	0.26	0.26	4475	3925	4225
MS18 or MS18 MOD	4650	350	400	275	22	170	19	160	25	200	19	170	0	16	300	13	350	0.93	0.24	0.26	0.25	4475	3925	4225
MS18 or MS18 MOD	5125	375	425	275	22	170	22	210	25	200	19	160	0	16	300	13	350	0.92	0.23	0.29	0.30	4475	3975	4275
MS18 or MS18 MOD	5625	375	450	300	22	160	22	200	25	190	19	170	0	16	300	13	350	0.92	0.23	0.31	0.31	4500	4000	4300
MS18 or MS18 MOD	6100	400	475	300	25	200	22	200	25	190	19	170	0	16	300	13	350	0.92	0.23	0.31	0.30	4500	4050	4350
MS18 or MS18 MOD	6575	425	500	325	25	200	22	210	25	190	19	170	0	16	300	13	350	0.91	0.23	0.31	0.30	4525	4100	4400
MS18 or MS18 MOD	7050	450	525	325	25	200	22	200	25	180	19	170	0	16	300	13	350	0.91	0.23	0.32	0.30	4525	4125	4450
MS18 or MS18 MOD	7525	475	525	350	25	190	22	210	25	170	19	160	0	16	300	13	350	0.90	0.23	0.32	0.30	4550	4175	4475
MS18 or MS18 MOD	8000	500	550	350	25	190	22	210	25	170	19	160	0	16	300	13	350	0.90	0.23	0.30	0.30	4550	4225	4525
MS18 or MS18 MOD	8500	500	575	350	25	180	22	200	25	170	19	160	0	16	290	13	350	0.90	0.23	0.32	0.30	4550	4250	4550
MS18 or MS18 MOD	8975	525	600	375	25	180	22	200	25	170	19	170	0	16	300	13	350	0.90	0.23	0.32	0.30	4575	4300	4600
MS18 or MS18 MOD	9450	550	600	375	25	180	22	200	25	160	19	160	0	16	300	13	350	0.89	0.23	0.30	0.29	4575	4325	4625

SPAN (S) = 4.2 m
HT (m) = 3.9 or 4.2

	DESIGN FILL	MEMBER THICKNESSES			TOP SLAB BARS				BOTTOM SLAB BARS				WALL BARS					COEFFICIENTS (see note)				"C" Multiplier	"K" Multiplier	
		TS	BS	TX	A1	Bars	J3	Bars	A2	Bars	J4	Bars	B2	Bars		F	Bars	J4		J3		S = 4.2 m	HT = 3.9 m	HT = 4.2 m
	(mm)	Thick	Thick.	Thick	Size	c to c	Size	c to c	Size	c to c	Size	c to c	G1	Size	c to c	Size	c to c	K3	C4	K2	C1	mm	mm	mm
MS18	225	275	350	275	22	200	19	220	22	190	19	200	300	16	300	13	350	0.95	0.48	0.22	0.60	4475	4375	4700
MS18	725	275	300	275	22	170	19	190	22	160	19	200	300	16	300	13	350	0.95	0.37	0.22	0.40	4475	4350	4650
MS18	1250	250	300	275	22	210	19	200	22	180	19	210	0	16	300	13	350	0.96	0.34	0.21	0.35	4475	4325	4625
MS18	1750	250	325	275	22	200	19	190	22	160	19	180	0	16	300	13	350	0.96	0.32	0.21	0.33	4475	4325	4650
MS18	2250	250	325	275	22	190	19	170	22	160	19	180	0	16	300	13	350	0.96	0.30	0.21	0.31	4475	4350	4650
MS18 MOD	175	325	375	275	22	190	19	220	22	180	19	200	300	16	300	13	350	0.94	0.49	0.22	0.60	4475	4475	4775
MS18 MOD	675	325	325	275	22	160	19	200	25	200	19	190	300	16	300	13	350	0.94	0.37	0.23	0.44	4475	4425	4725
MS18 MOD	1225	275	325	275	22	190	19	190	22	160	19	190	0	16	300	13	350	0.95	0.34	0.22	0.35	4475	4350	4675
MS18 MOD	1725	275	325	275	22	200	19	180	22	160	19	180	0	16	300	13	350	0.95	0.32	0.22	0.33	4475	4375	4675
MS18 MOD	2225	275	350	275	22	190	19	170	25	200	19	170	0	16	300	13	350	0.95	0.30	0.22	0.31	4475	4375	4700
MS18 or MS18 MOD	2725	275	350	275	22	180	22	210	25	200	19	170	0	16	290	13	350	0.95	0.29	0.26	0.31	4475	4400	4700
MS18 or MS18 MOD	3200	300	375	275	22	180	22	210	22	160	19	160	0	16	270	13	350	0.95	0.29	0.24	0.32	4475	4450	4750
MS18 or MS18 MOD	3675	325	400	300	22	180	19	160	25	200	19	160	0	16	300	13	350	0.94	0.28	0.22	0.30	4500	4475	4800
MS18 or MS18 MOD	4150	350	400	300	22	170	22	210	25	200	22	200	0	16	280	13	350	0.94	0.30	0.27	0.31	4500	4525	4825
MS18 or MS18 MOD	4650	350	425	325	22	180	19	160	25	200	19	160	0	16	300	13	350	0.94	0.28	0.23	0.29	4525	4525	4850
MS18 or MS18 MOD	5125	375	425	325	22	180	22	210	25	200	22	200	0	16	290	13	350	0.93	0.30	0.27	0.34	4525	4575	4875
MS18 or MS18 MOD	5625	375	450	350	22	170	22	210	25	190	22	210	0	16	250	13	350	0.93	0.30	0.27	0.34	4550	4600	4900
MS18 or MS18 MOD	6100	400	475	350	22	160	22	200	25	190	22	210	0	16	270	13	350	0.93	0.29	0.27	0.34	4550	4650	4950
MS18 or MS18 MOD	6575	425	500	375	22	160	22	200	25	190	22	210	0	16	240	13	350	0.92	0.29	0.27	0.34	4575	4700	5000
MS18 or MS18 MOD	7050	450	525	375	22	160	22	200	25	190	22	210	0	16	260	13	350	0.92	0.29	0.28	0.33	4575	4750	5050
MS18 or MS18 MOD	7525	475	550	400	22	160	22	200	25	180	22	210	0	16	220	13	350	0.92	0.29	0.28	0.33	4600	4800	5100
MS18 or MS18 MOD	8000	500	575	400	25	200	22	200	25	180	22	210	0	16	260	13	350	0.91	0.29	0.28	0.33	4600	4825	5150
MS18 or MS18 MOD	8500	500	575	400	25	190	22	190	25	170	22	200	0	16	240	13	350	0.91	0.29	0.28	0.33	4600	4850	5150
MS18 or MS18 MOD	8975	525	600	425	25	190	22	190	25	170	22	200	0	16	200	13	350	0.91	0.29	0.28	0.33	4625	4900	5200
MS18 or MS18 MOD	9450	550	625	425	25	190	22	190	25	170	22	200	0	16	220	13	350	0.90	0.29	0.28	0.33	4625	4950	5250

SPAN (S) = 4.2 m
HT (m) = 4.5 or 4.8

	DESIGN FILL	MEMBER THICKNESSES			TOP SLAB BARS				BOTTOM SLAB BARS				WALL BARS					COEFFICIENTS (see note)				"C" Multiplier	"K" Multiplier	
		TS	BS	TX	A1	Bars	J3	Bars	A2	Bars	J4	Bars	B2	Bars		F	Bars	J4		J3		S = 4.2 m	HT = 4.5 m	HT = 4.8 m
	(mm)	Thick	Thick.	Thick	Size	c to c	Size	c to c	Size	c to c	Size	c to c	G1	Size	c to c	Size	c to c	K3	C4	K2	C1	mm	mm	mm
MS18	225	275	350	300	22	200	19	220	22	190	19	190	300	16	240	13	350	0.96	0.62	0.19	0.60	4500	5000	5300
MS18	725	275	325	300	22	170	19	190	22	160	19	190	300	16	220	13	350	0.96	0.46	0.19	0.56	4500	4950	5275
MS18	1250	250	300	300	22	210	19	190	22	170	19	170	0	16	210	13	350	0.96	0.39	0.19	0.40	4500	4925	5225
MS18	1750	250	325	300	22	210	19	180	22	170	19	180	0	16	200	13	350	0.96	0.38	0.19	0.37	4500	4950	5250
MS18	2250	250	325	300	22	200	19	160	22	160	19	160	0	16	200	13	350	0.96	0.36	0.19	0.35	4500	4950	5250
MS18 MOD	175	325	375	300	22	190	19	210	22	170	19	180	300	16	250	13	350	0.95	0.62	0.20	0.60	4500	5075	5375
MS18 MOD	675	325	350	300	22	160	19	190	25	200	19	180	300	16	240	13	350	0.95	0.47	0.20	0.60	4500	5025	5350
MS18 MOD	1225	275	325	300	22	200	19	190	22	170	19	180	0	16	220	13	350	0.96	0.40	0.19	0.42	4500	4975	5275
MS18 MOD	1725	275	350	300	22	200	19	180	22	160	19	170	0	16	200	13	350	0.96	0.38	0.19	0.38	4500	4975	5300
MS18 MOD	2225	275	350	300	22	200	19	170	22	160	19	160	0	16	200	13	350	0.96	0.36	0.19	0.36	4500	5000	5300
MS18 or MS18 MOD	2725	275	350	300	22	190	19	160	25	200	22	200	0	16	190	13	350	0.96	0.37	0.19	0.35	4500	5000	5300
MS18 or MS18 MOD	3200	300	375	325	22	190	19	160	22	160	22	210	0	16	200	13	350	0.95	0.36	0.19	0.34	4525	5050	5350
MS18 or MS18 MOD	3675	325	400	350	22	190	19	170	22	160	19	160	0	16	220	13	350	0.95	0.32	0.20	0.33	4550	5100	5400
MS18 or MS18 MOD	4150	350	425	350	22	190	19	160	22	160	22	200	0	16	200	13	350	0.95	0.34	0.20	0.33	4550	5150	5450
MS18 or MS18 MOD	4650	350	425	375	22	200	19	170	22	160	22	210	0	16	220	13	350	0.95	0.34	0.20	0.32	4575	5150	5450
MS18 or MS18 MOD	5125	375	450	375	22	190	22	210	22	160	22	200	0	16	200	13	350	0.94	0.33	0.24	0.36	4575	5200	5500
MS18 or MS18 MOD	5625	375	475	400	22	180	22	210	25	200	22	200	0	16	220	13	350	0.94	0.33	0.24	0.37	4600	5225	5525
MS18 or MS18 MOD	6100	400	500	400	22	170	22	200	25	190	22	200	0	16	200	13	350	0.94	0.33	0.24	0.37	4600	5250	5575
MS18 or MS18 MOD	6575	425	525	425	22	170	22	200	25	190	22	200	0	16	210	13	350	0.93	0.33	0.24	0.37	4625	5300	5625
MS18 or MS18 MOD	7050	450	525	425	22	170	22	200	25	190	22	190	0	16	200	13	350	0.93	0.33	0.25	0.36	4625	5350	5650
MS18 or MS18 MOD	7525	475	550	450	22	170	22	200	25	190	22	190	0	16	200	13	350	0.93	0.33	0.25	0.37	4650	5400	5700
MS18 or MS18 MOD	8000	500	575	450	22	160	22	190	25	180	22	190	0	16	190	13	350	0.92	0.33	0.25	0.36	4650	5450	5750
MS18 or MS18 MOD	8500	500	600	475	22	160	22	190	25	180	22	190	0	16	200	13	350	0.92	0.32	0.25	0.37	4675	5475	5775
MS18 or MS18 MOD	8975	525	600	475	25	200	22	190	25	170	22	180	0	16	190	13	350	0.92	0.32	0.25	0.36	4675	5500	5800
MS18 or MS18 MOD	9450	550	625	500	25	200	22	190	25	170	22	190	0	16	180	13	350	0.92	0.32	0.25	0.36	4700	5550	5850

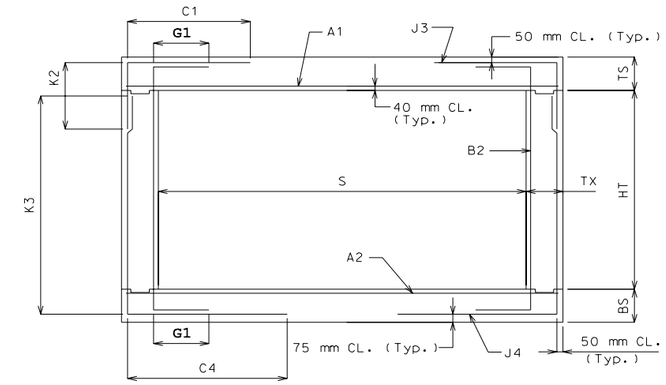

SECTION THRU BOX

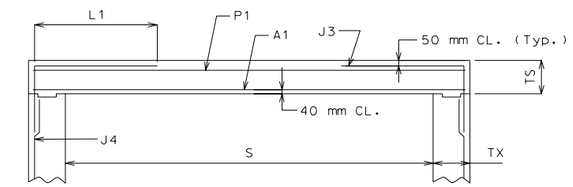

PART SECTION THRU BOX FOR MODIFIED J3 ALTERNATIVE
(B2 BAR NOT SHOWN FOR CLARITY)

NOTE: IF DESIGN FILL FALLS BETWEEN TABULATED FILLS, USE THE ADJACENT TABULATED FILL WHICH YIELDS THE GREATER MEMBER THICKNESS. IF THE MEMBER THICKNESSES ARE EQUAL, USE THE ADJACENT TABULATED FILL WHICH YIELDS THE GREATER AREA OF REINFORCEMENT.

SPECIAL DESIGNS ARE REQUIRED WHEN THE DESIGN FILL IS OUTSIDE THE RANGE OF TABULATED FILLS.

ALL DIMENSIONS ARE IN mm UNLESS OTHERWISE SPECIFIED

COEFFICIENTS: DIMENSIONS MARKED WITH C# OR K# ARE THE PRODUCT OF THE COEFFICIENT AND ITS ASSOCIATED MULTIPLIER.

DESIGN FILL HEIGHT GIVEN IN THE TABLES IS THE HEIGHT FROM THE TOP OF THE EARTH FILL OR ROADWAY TO THE TOP OF THE TOP SLAB.

ALL CULVERTS MEET STRENGTH REQUIREMENTS FOR MILITARY 106 kN TANDEM AXLE LOADING.

AT CONTRACTOR'S OPTION, A MODIFIED J3 ALTERNATIVE MAY BE UTILIZED WHEN THE DISTANCE BETWEEN THE ENDS OF J3 BARS AT TOP SLAB IS LESS THAN 600 mm. J3 BARS WITH HORIZONTAL LENGTH L1 (Instead of C1) MUST BE USED, WHERE L1 IS EQUAL TO 450, 550, AND 700 mm FOR #13, #16, AND #19 BARS, RESPECTIVELY. ADDITIONAL P1 BAR IS REQUIRED WITH THE MODIFIED J3 ALTERNATIVE AND MUST BE OF THE SAME SIZE AND SPACING AS J3 BAR WITH A LENGTH EQUAL TO A1 BAR. NO ADDITIONAL PAYMENT WILL BE MADE FOR THIS SUBSTITUTION.

MISSOURI HIGHWAY AND TRANSPORTATION COMMISSION

CONCRETE SINGLE BOX CULVERT

MEMBER SIZES AND REINFORCEMENT

(MS18 & MS18 MOD LOADING)

DATE: | EFFECTIVE: 04-01-2002 | **M703.15C** | 11/13

Span (S) = 4.5 m
HT (m) = 3.6 or 3.9 or 4.2

Loading	DESIGN FILL (mm)	MEMBER THICKNESSES TS Thick	BS Thick.	TX Thick	TOP SLAB BARS A1 Size	Bars c to c	J3 Size	Bars c to c	BOTTOM SLAB BARS A2 Size	Bars c to c	J4 Size	Bars c to c	WALL BARS G1	B2 Bars Size	c to c	F Bars Size	c to c	COEFFICIENTS (see note) J4 K3	J4 C4	J3 K2	J3 C1	"C" Multiplier S = 4.5 m (mm)	"K" Multiplier HT = 3.6 m (mm)	HT = 3.9 m (mm)	HT = 4.2 m (mm)
MS18	200	300	350	275	22	200	19	220	22	180	19	200	300	16	300	13	350	0.95	0.41	0.22	0.59	4775	4100	4425	4725
MS18	700	300	325	275	22	160	19	190	25	200	19	180	300	16	300	13	350	0.95	0.34	0.24	0.37	4775	4075	4375	4700
MS18	1225	275	300	275	22	190	19	190	22	160	19	180	0	16	300	13	350	0.95	0.31	0.23	0.32	4775	4050	4350	4650
MS18	1725	275	325	275	22	190	19	180	22	160	19	180	0	16	300	13	350	0.95	0.29	0.23	0.30	4775	4075	4375	4675
MS18	2225	275	350	275	22	180	19	160	25	200	19	170	0	16	300	13	350	0.95	0.28	0.23	0.30	4775	4075	4400	4700
MS18 MOD	175	325	375	275	22	180	19	200	22	170	19	190	300	16	300	13	350	0.94	0.42	0.24	0.59	4775	4175	4475	4775
MS18 MOD	650	350	350	275	25	200	19	200	25	190	19	170	300	16	300	13	350	0.94	0.34	0.25	0.39	4775	4150	4450	4775
MS18 MOD	1225	275	325	275	22	170	19	170	22	160	19	190	0	16	300	13	350	0.95	0.31	0.23	0.32	4775	4075	4375	4675
MS18 MOD	1725	275	350	275	22	170	19	160	25	190	19	180	0	16	300	13	350	0.95	0.29	0.23	0.30	4775	4075	4375	4700
MS18 MOD	2200	300	350	275	22	170	22	210	25	190	19	160	0	16	300	13	350	0.95	0.28	0.26	0.30	4775	4100	4400	4725
MS18 or MS18 MOD	2700	300	375	275	22	170	22	200	25	190	19	160	0	16	300	13	350	0.95	0.27	0.28	0.31	4775	4150	4450	4750
MS18 or MS18 MOD	3175	325	400	275	22	160	22	200	25	180	22	210	0	16	300	13	350	0.94	0.28	0.28	0.30	4775	4175	4475	4800
MS18 or MS18 MOD	3650	350	400	300	22	160	22	200	25	180	22	210	0	16	300	13	350	0.94	0.28	0.29	0.30	4800	4225	4525	4825
MS18 or MS18 MOD	4150	350	425	300	25	200	22	180	25	180	22	200	0	16	300	13	350	0.94	0.28	0.28	0.29	4800	4250	4550	4850
MS18 or MS18 MOD	4625	375	450	325	25	200	22	190	25	180	22	210	0	16	300	13	350	0.93	0.28	0.29	0.32	4825	4300	4600	4900
MS18 or MS18 MOD	5125	375	450	325	25	200	22	180	25	180	22	200	0	16	300	13	350	0.93	0.27	0.29	0.32	4825	4300	4600	4900
MS18 or MS18 MOD	5600	400	475	350	25	200	22	190	25	180	22	200	0	16	290	13	350	0.93	0.27	0.29	0.32	4850	4350	4650	4950
MS18 or MS18 MOD	6075	425	500	350	25	190	22	190	25	170	22	200	0	16	250	13	350	0.92	0.27	0.29	0.31	4850	4400	4700	5000
MS18 or MS18 MOD	6550	450	525	375	25	190	22	190	25	170	22	200	0	16	280	13	350	0.92	0.27	0.29	0.31	4875	4450	4750	5050
MS18 or MS18 MOD	7025	475	550	375	25	180	22	190	25	170	22	200	0	16	240	13	350	0.92	0.27	0.30	0.31	4875	4500	4800	5100
MS18 or MS18 MOD	7500	500	575	400	25	180	22	190	25	170	22	200	0	16	250	13	350	0.91	0.27	0.30	0.31	4900	4550	4850	5150
MS18 or MS18 MOD	7975	525	600	400	25	180	22	190	25	160	22	200	0	16	230	13	350	0.91	0.27	0.30	0.31	4900	4575	4900	5200
MS18 or MS18 MOD	8450	550	625	425	25	170	22	190	25	160	22	200	0	16	240	13	350	0.90	0.27	0.30	0.31	4925	4625	4925	5250
MS18 or MS18 MOD	8950	550	625	425	25	170	22	180	29	200	22	200	0	16	240	13	350	0.90	0.27	0.30	0.31	4925	4650	4950	5250
MS18 or MS18 MOD	9425	575	650	425	25	170	22	180	29	190	22	190	0	16	210	13	350	0.90	0.26	0.30	0.31	4925	4700	5000	5300

SPAN (S) = 4.5 m
HT (m) = 4.5 or 4.8

Loading	DESIGN FILL (mm)	MEMBER THICKNESSES TS Thick	BS Thick.	TX Thick	TOP SLAB BARS A1 Size	Bars c to c	J3 Size	Bars c to c	BOTTOM SLAB BARS A2 Size	Bars c to c	J4 Size	Bars c to c	WALL BARS G1	B2 Bars Size	c to c	F Bars Size	c to c	COEFFICIENTS (see note) J4 K3	J4 C4	J3 K2	J3 C1	"C" Multiplier S = 4.5 m (mm)	"K" Multiplier HT = 4.5 m (mm)	HT = 4.8 m (mm)
MS18	200	300	350	300	22	200	19	210	22	180	19	180	300	16	250	13	350	0.95	0.56	0.20	0.59	4800	5025	5325
MS18	700	300	325	300	22	160	19	180	22	160	19	180	300	16	240	13	350	0.95	0.40	0.20	0.49	4800	5000	5300
MS18	1225	275	325	300	22	200	19	190	22	160	19	170	0	16	230	13	350	0.96	0.37	0.19	0.38	4800	4950	5275
MS18	1725	275	325	300	22	190	19	180	25	200	19	160	0	16	220	13	350	0.96	0.34	0.19	0.35	4800	4975	5275
MS18	2225	275	350	300	22	180	19	160	25	200	22	210	0	16	220	13	350	0.96	0.35	0.19	0.33	4800	5000	5300
MS18 MOD	175	325	375	300	22	180	19	200	22	160	19	170	300	16	260	13	350	0.95	0.61	0.20	0.59	4800	5075	5375
MS18 MOD	650	350	350	300	25	200	19	180	25	190	19	170	300	16	240	13	350	0.94	0.40	0.20	0.59	4800	5075	5375
MS18 MOD	1225	275	325	300	22	180	19	180	25	200	19	170	0	16	230	13	350	0.96	0.37	0.19	0.38	4800	4975	5275
MS18 MOD	1725	275	350	300	22	180	19	160	25	200	19	160	0	16	220	13	350	0.96	0.35	0.19	0.35	4800	5000	5300
MS18 MOD	2200	300	375	300	22	180	19	160	25	190	22	200	0	16	220	13	350	0.95	0.35	0.20	0.34	4800	5025	5350
MS18 or MS18 MOD	2700	300	375	300	22	180	22	210	25	190	22	190	0	16	200	13	350	0.95	0.34	0.22	0.34	4800	5050	5350
MS18 or MS18 MOD	3175	325	400	325	22	180	22	210	25	190	22	200	0	16	220	13	350	0.95	0.33	0.23	0.32	4825	5100	5400
MS18 or MS18 MOD	3650	350	425	350	22	180	22	210	25	200	22	200	0	16	240	13	350	0.95	0.32	0.24	0.31	4850	5150	5450
MS18 or MS18 MOD	4150	350	450	350	22	160	22	190	25	180	22	200	0	16	220	13	350	0.95	0.32	0.24	0.33	4850	5150	5475
MS18 or MS18 MOD	4625	375	475	375	22	160	22	200	25	180	22	200	0	16	240	13	350	0.94	0.31	0.24	0.35	4875	5200	5525
MS18 or MS18 MOD	5125	375	475	375	22	160	22	190	25	180	22	190	0	16	230	13	350	0.94	0.31	0.24	0.35	4875	5200	5525
MS18 or MS18 MOD	5600	400	500	400	22	160	22	200	25	180	22	200	0	16	230	13	350	0.94	0.31	0.24	0.35	4900	5250	5575
MS18 or MS18 MOD	6075	425	525	400	22	160	22	190	25	180	22	190	0	16	220	13	350	0.93	0.30	0.24	0.35	4900	5300	5625
MS18 or MS18 MOD	6550	450	550	425	25	200	22	190	25	180	22	190	0	16	220	13	350	0.93	0.30	0.25	0.35	4925	5350	5675
MS18 or MS18 MOD	7025	475	550	425	25	200	22	180	25	170	22	180	0	16	220	13	350	0.93	0.30	0.25	0.34	4925	5400	5700
MS18 or MS18 MOD	7500	500	575	450	25	200	22	190	25	170	22	180	0	16	210	13	350	0.92	0.30	0.25	0.34	4950	5450	5750
MS18 or MS18 MOD	7975	525	600	450	25	190	22	180	25	170	22	180	0	16	220	13	350	0.92	0.30	0.25	0.34	4950	5500	5800
MS18 or MS18 MOD	8450	550	625	475	25	190	22	180	25	170	22	180	0	16	200	13	350	0.92	0.30	0.25	0.34	4975	5550	5850
MS18 or MS18 MOD	8950	550	650	475	25	180	22	170	25	160	22	180	0	16	180	13	350	0.92	0.30	0.25	0.34	4975	5575	5875
MS18 or MS18 MOD	9425	575	675	500	25	180	22	180	25	160	22	180	0	16	200	13	350	0.91	0.30	0.26	0.34	5000	5600	5925

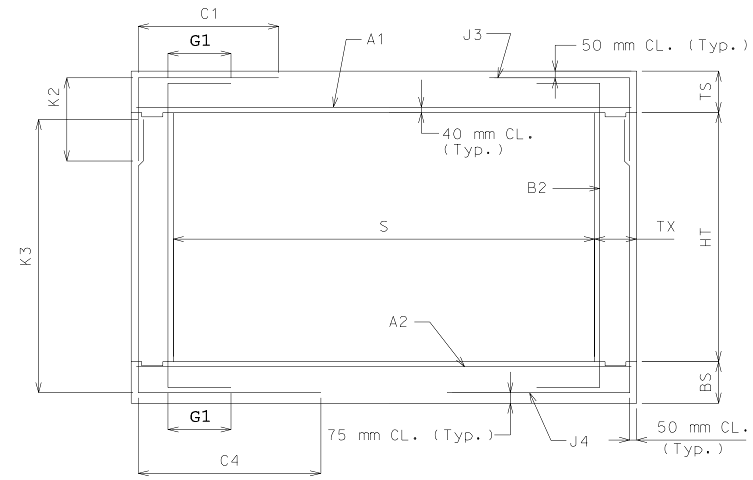

SECTION THRU BOX

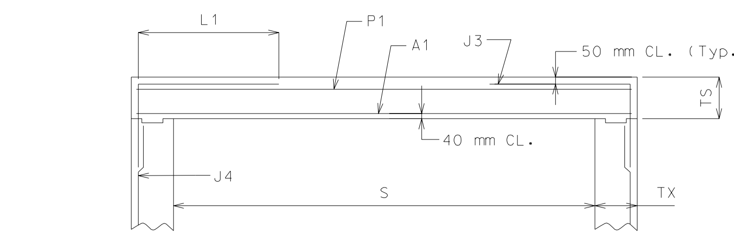

PART SECTION THRU BOX FOR MODIFIED J3 ALTERNATIVE
(B2 BAR NOT SHOWN FOR CLARITY)

NOTE: IF DESIGN FILL FALLS BETWEEN TABULATED FILLS, USE THE ADJACENT TABULATED FILL WHICH YIELDS THE GREATER MEMBER THICKNESS. IF THE MEMBER THICKNESSES ARE EQUAL, USE THE ADJACENT TABULATED FILL WHICH YIELDS THE GREATER AREA OF REINFORCEMENT.

SPECIAL DESIGNS ARE REQUIRED WHEN THE DESIGN FILL IS OUTSIDE THE RANGE OF TABULATED FILLS.

ALL DIMENSIONS ARE IN mm UNLESS OTHERWISE SPECIFIED.

COEFFICIENTS: DIMENSIONS MARKED WITH C# OR K# ARE THE PRODUCT OF THE COEFFICIENT AND ITS ASSOCIATED MULTIPLIER.

DESIGN FILL HEIGHT GIVEN IN THE TABLES IS THE HEIGHT FROM THE TOP OF THE EARTH FILL OR ROADWAY TO THE TOP OF THE TOP SLAB.

ALL CULVERTS MEET STRENGTH REQUIREMENTS FOR MILITARY 106 kN TANDEM AXLE LOADING.

AT CONTRACTOR'S OPTION, A MODIFIED J3 ALTERNATIVE MAY BE UTILIZED WHEN THE DISTANCE BETWEEN THE ENDS OF J3 BARS AT TOP SLAB IS LESS THAN 600 mm. J3 BARS WITH HORIZONTAL LENGTH L1 (Instead of C1) MUST BE USED, WHERE L1 IS EQUAL TO 450, 550, AND 700 mm FOR #13, #16, AND #19 BARS, RESPECTIVELY. ADDITIONAL P1 BAR IS REQUIRED WITH THE MODIFIED J3 ALTERNATIVE AND MUST BE OF THE SAME SIZE AND SPACING AS J3 BAR WITH A LENGTH EQUAL TO A1 BAR. NO ADDITIONAL PAYMENT WILL BE MADE FOR THIS SUBSTITUTION.

MISSOURI HIGHWAY AND TRANSPORTATION COMMISSION

CONCRETE SINGLE BOX CULVERT

MEMBER SIZES AND REINFORCEMENT

(MS18 & MS18 MOD LOADING)

DATE: | EFFECTIVE: 04-01-2002 | **M703.15C** | 12/13

| | DESIGN FILL | MEMBER THICKNESSES | | | Span (S) = 4.8 m; HT (m) = 3.9 or 4.2 | | |