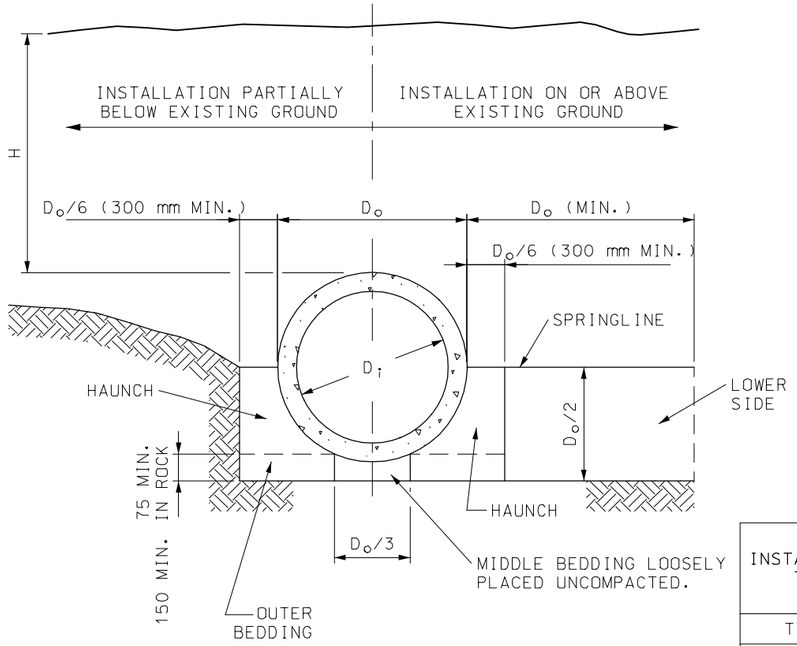

EMBANKMENT INSTALLATIONS

CONSTRUCTION SEQUENCE
1. PLACE BEDDING MATERIAL TO GRADE. DO NOT COMPACT.
2. INSTALL PIPE TO GRADE.
3. COMPACT BEDDING OUTSIDE THE MIDDLE THIRD OF THE PIPE.
4. PLACE AND COMPACT THE HAUNCH AREA UP TO THE SPRINGLINE.
5. COMPLETE BACKFILL ACCORDING TO SPECIFICATIONS.

MAXIMUM HEIGHT OF FILL OVER R.C. PIPE CULVERTS

INSTALLATION TYPE	CLASS OF PIPE				
	CLASS I	CLASS II	CLASS III	CLASS IV	CLASS V
	m				
TYPE 1	4.2	5.4	6.3	9.9	15.0
TYPE 2	2.7	3.6	4.8	7.5	11.4
TYPE 3	2.1	3.0	3.6	5.7	9.0
TYPE 4	1.5	2.1	2.4	3.9	5.7

NOTE: IF FILL HEIGHT EXCEEDS 15.0 m, A SPECIAL DESIGN CONCRETE PIPE WILL BE REQUIRED USING TYPE 1 INSTALLATION.

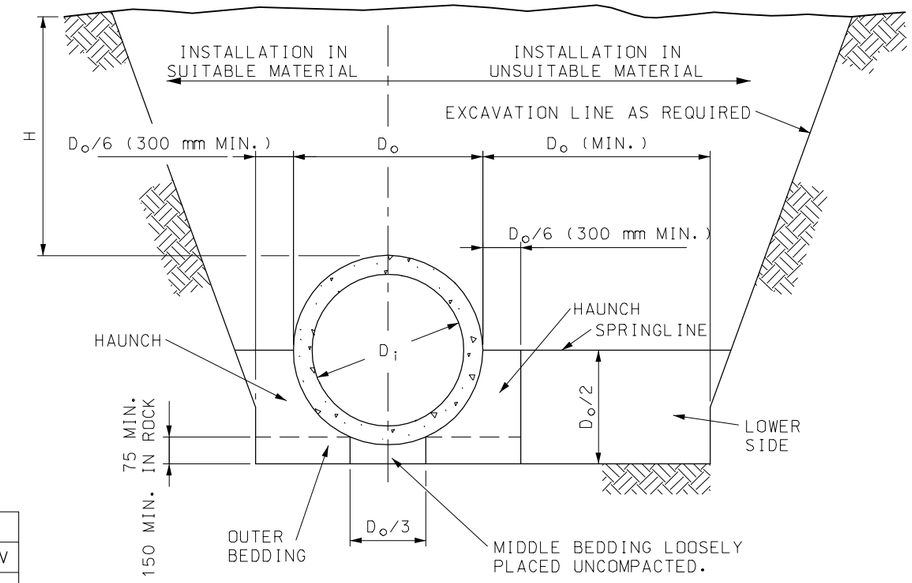

TRENCH INSTALLATION

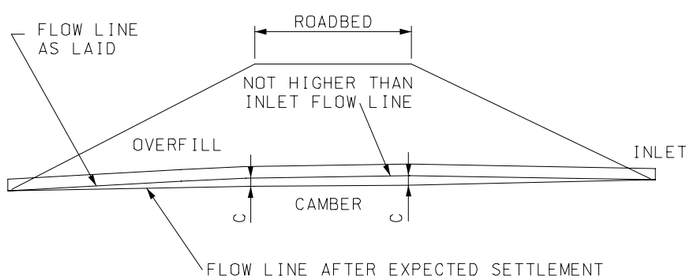

NOTE:
ON YIELDING SOIL, PIPE CULVERTS SHALL BE PLACED ON A CAMBERED FLOW LINE. THE AMOUNT OF CAMBER WILL VARY WITH SOIL CONDITION AND SHALL BE SPECIFIED ON THE DESIGN PLANS.

TYPICAL CAMBERED FLOW LINE

BEDDING AND COMPACTION REQUIREMENTS

INSTALLATION TYPE	BEDDING THICKNESS	COMPACTION REQUIREMENTS (MIN. STANDARD PROCTOR %)					
		HAUNCH AND OUTER BEDDING			LOWER SIDE BEDDING		
		CATEGORY 1 SOIL (A)	CATEGORY 2 SOIL (B)	CATEGORY 3 SOIL (C)	CATEGORY 1 SOIL (A)	CATEGORY 2 SOIL (B)	CATEGORY 3 SOIL (C)
1	D_o/24 MINIMUM, NOT LESS THAN 75 mm. IF ROCK FOUNDATION, USE D_o/12 MIMIMUM, NOT LESS THAN 150 mm.	95	N/A	N/A	90	95	100
2	D_o/24 MINIMUM, NOT LESS THAN 75 mm. IF ROCK FOUNDATION, USE D_o/12 MIMIMUM, NOT LESS THAN 150 mm.	90	95	N/A	85	90	95
3	D_o/24 MINIMUM, NOT LESS THAN 75 mm. IF ROCK FOUNDATION, USE D_o/12 MIMIMUM, NOT LESS THAN 150 mm.	85	90	95	85	90	95
4	D_o/24 MINIMUM, NOT LESS THAN 75 mm. IF ROCK FOUNDATION, USE D_o/12 MIMIMUM, NOT LESS THAN 150 mm.	NO COMPACTION REQUIRED	NO COMPACTION REQUIRED	85	NO COMPACTION REQUIRED	NO COMPACTION REQUIRED	85

(A) GRAVELLY SAND
(B) SANDY-SILT
(C) SILTY CLAY

– LEGEND –

D_i = NORMAL INSIDE DIAMETER OF PIPE.
D_o = OUTSIDE DIAMETER OF PIPE.
H = FILL COVER HEIGHT OVER PIPE (m)
MIN. = MINIMUM
= UNDISTURBED SOIL

GENERAL NOTES:

ALL DIMENSIONS SHOWN ARE IN mm UNLESS OTHERWISE NOTED.

MULTIPLE PIPE CULVERTS SHALL BE INSTALLED WITH A MINIMUM CLEARANCE BETWEEN PIPES OF $\frac{1}{2}$ D_o OR 300 mm, WHICHEVER IS GREATER, BUT NOT TO EXCEED 900 mm.

CLASS I AND CLASS II REINFORCED CONCRETE PIPE SHALL ONLY BE USED FOR SEWERS IN TRENCHES OUTSIDE ROADBED AND STREET LIMITS.

MISSOURI HIGHWAYS AND TRANSPORTATION COMMISSION

RIGID CULVERT INSTALLATION METHODS

REINFORCED CONCRETE PIPE CULUVERTS

DATE:_____ EFFECTIVE: 07-01-2004 **M726.30F** 1/2

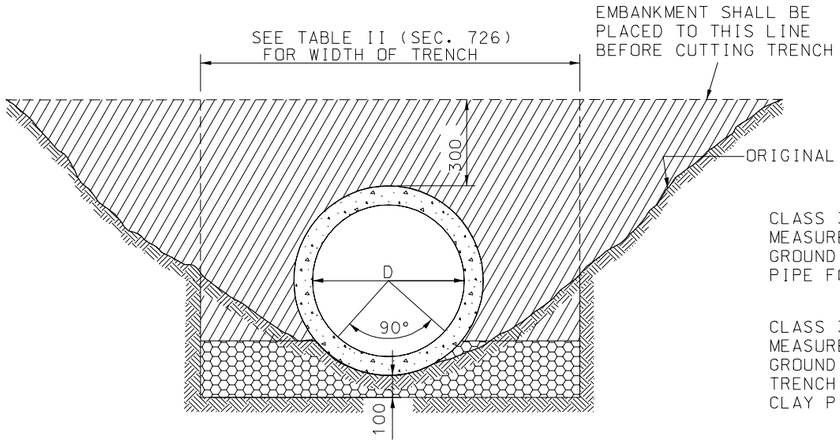

EXTRA STRENGTH

CLASS 3 EXCAVATION LIMITS MEASURED FROM ORIGINAL GROUND LINE TO BOTTOM OF PIPE FOR GROUP 1 PIPE.

CLASS 3 EXCATAION LIMITS MEASURED FROM ORIGINAL GROUND LINE TO BOTTOM OF TRENCH WHEN VITRIFIED CLAY PIPE IS SPECIFIED.

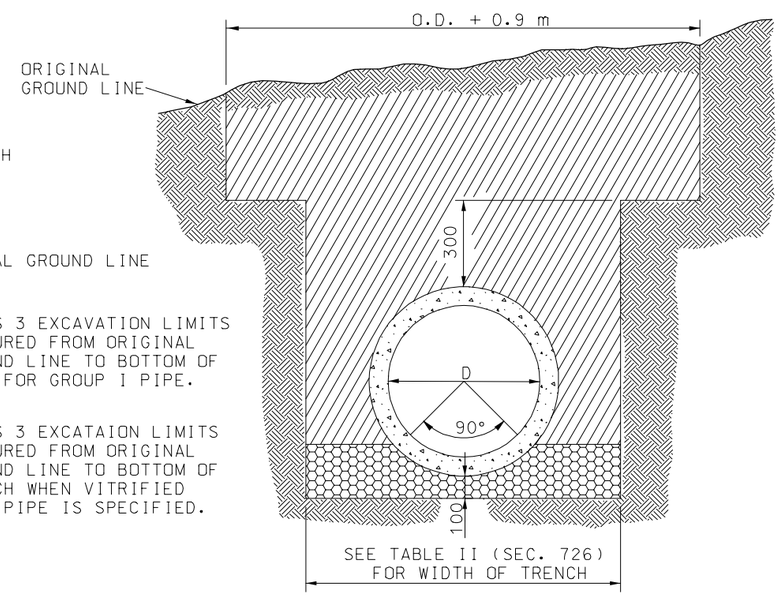

STANDARD STRENGTH

LEGEND

- COMPACTED ROADWAY EMBANKMENT
- SUITABLE BACKFILL
- LOOSE DRY MATERIAL
- COMPACTED SAND

HEIGHT OF FILL OVER V.C. PIPE CULVERTS						
	STANDARD STRENGTH			EXTRA STRENGTH		
NOMINAL PIPE DIAMETER (mm)	TRENCH WIDTH AT 300 mm ABOVE TOP OF PIPE (m)	MINIMUM FILL HEIGHT (m)	MAXIMUM FILL HEIGHT (m)	TRENCH WIDTH AT 300 mm ABOVE TOP OF PIPE (m)	MINIMUM FILL HEIGHT (m)	MAXIMUM FILL HEIGHT (m)
150	0.60	0.3	2.7			
200	0.60	0.3	2.1	0.75	1.2	3.6
250	0.75	0.3	2.1	0.75	1.2	3.6
300	0.81	0.3	1.8	0.90	1.2	3.9
375	1.05	0.3	1.8	0.90	1.2	5.1
450	1.05	0.3	1.8	1.05	1.2	5.1
525	1.20	0.3	1.8	1.20	1.2	5.1
600	1.20	0.3	2.4	1.20	0.9	5.7
750	1.35	0.3	3.0	1.35	0.9	5.7
900	1.50	0.3	3.3	1.50	0.9	5.7

GENERAL NOTES:

ALL DIMENSIONS SHOWN ARE IN mm UNLESS OTHERWISE NOTED.

MISSOURI HIGHWAYS AND TRANSPORTATION COMMISSION

RIGID CULVERT INSTALLATION METHODS

VITRIFIED CLAY PIPE CULUVERTS

DATE:_____ EFFECTIVE: 07-01-2004 **M726.30F** 2/2