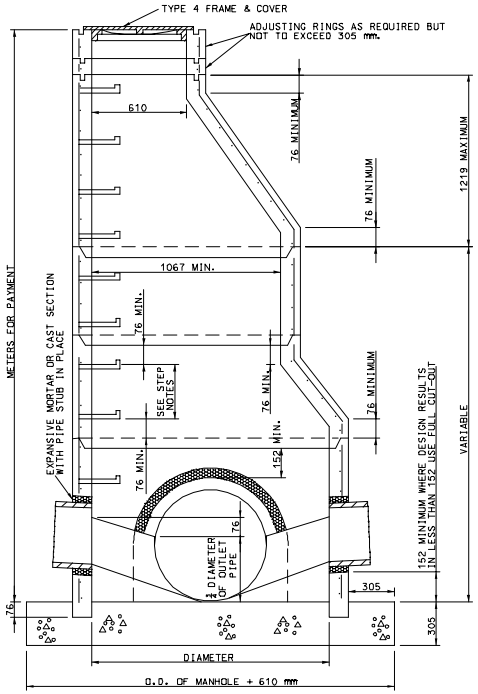

PRECAST BASE SECTION SET ON CONCRETE BLOCKS FOUNDATION SLAB AND INVERT POURED MONOLITHIC.

SECTION A-A

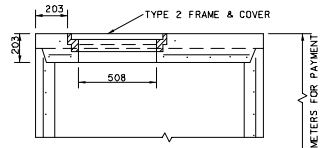

ALTERNATE FLAT SLAB MANHOLE TOP (UNPAVED AREA) USED WHERE DEPTH OF MANHOLE WILL NOT PERMIT USE OF CONE AND TAPER SECTIONS.

ALTERNATE SECTION B-B

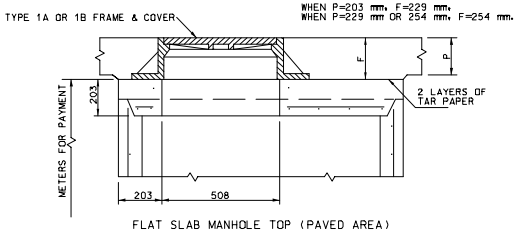

FLAT SLAB MANHOLE TOP (PAVED AREA)

SECTION B-B

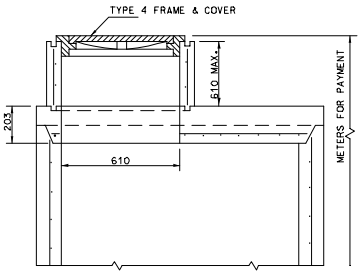

ALTERNATE MANHOLE TOP

BASE SECTION DIMENSIONS✳	
SIZE OF PIPE mm	MIN. DIA. mm
LESS THAN 600	1219
750 - 900	1524
1050 - 1200	1829

✳ RISER SECTIONS SHALL NOT BE LESS THAN 1967 mm DIAMETER.

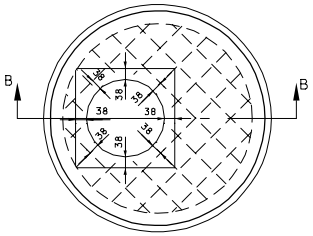

PLAN OF FLAT SLAB MANHOLE TOP

STEPS SHALL BE PLACED AT VERTICAL INTERVALS OF 406 mm MAXIMUM IN ALL MANHOLES HAVING A DEPTH OF MORE THAN 1219 mm. STEPS SHALL BEGIN AT AN ELEVATION 152 mm ABOVE THE TOP OF THE OUTLET PIPE.

STEPS SHALL BE SET LEVEL AND IN VERTICAL ALIGNMENT.

NO DIRECT PAYMENT WILL BE MADE FOR MANHOLE STEPS.

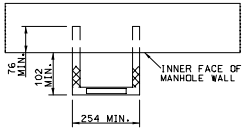

STEP INSTALLATION

GENERAL NOTES:

ALL DIMENSIONS SHOWN ARE IN mm UNLESS OTHERWISE NOTED.

THE CONTRACTOR WILL BE PERMITTED TO CAST IN PLACE THE MANHOLES. IN ACCORDANCE WITH THE CONCRETE MANHOLE STANDARD.

IF THE CONTRACTOR ELECTS TO CAST IN PLACE THE MANHOLES, PAYMENT WILL BE MADE AT THE CONTRACT UNIT PRICE FOR PRECAST MANHOLES.

THE CONFIGURATION DETAILS SHOWN ARE DESCRIPTIVE ONLY AND MAY BE VARIED TO CONFORM WITH AN ESTABLISHED MANUFACTURING PROCEDURE.

FORMED OR CUT OUT OPENINGS SHALL BE PROVIDED WHERE PIPE INLETS AND OUTLETS ARE SHOWN ON THE PLANS.

THE TOP OF THE INLET PIPES SHALL NOT BE SET BELOW THE TOP OF THE OUTLET PIPE.

REINFORCEMENT SHALL BE CUT AT PIPE OPENINGS.

NO DIRECT PAYMENT WILL BE MADE FOR CUTTING PIPE NOR FOR CUTTING AND BENDING REINFORCING STEEL.

WHERE THE WIDTH OF THE BASE SECTION IS GREATER THAN 1067 mm AN ECCENTRIC TAPER SECTION MAY BE USED TO ALLOW THE USE OF 1067 mm RISER SECTIONS.

THE LOWER TRANSITION SECTION AS SHOWN ON SECTION A-A IS OPTIONAL.

FOUL WATER DROPS ARE REQUIRED WHEN SPECIFIED IN THE PLANS. NO DIRECT PAYMENT WILL BE MADE FOR THE FOUL WATER DROP OR ITS ENCASEMENT.

SEE STANDARD PLAN M614.30 FOR MANHOLE FRAMES AND COVERS.

WHERE PIPES DO NOT ENTER OR EXIT RADIALLY, USE NEXT LARGER SIZE MANHOLE.

CLASS 3 EXCAVATION WILL BE PAID WITHIN VERTICAL LIMITS 457 mm OUTSIDE OF THE OUTER WALLS OF THE BASE SECTION OF THE MANHOLE. CLASS 3 EXCAVATION WILL NOT BE PAID FOR OUTSIDE THE FOOTING LIMITS.

ALL PIPE CONNECTED WITH A MANHOLE WILL BE MEASURED AND PAID FOR TO THE INSIDE WALL OF THE MANHOLE.

CIRCUMFERENTIAL REINFORCEMENT SIZE AND PLACEMENT SHALL BE IN ACCORDANCE WITH THE STANDARD SPECIFICATIONS TO A MAXIMUM DEPTH OF 6.1 m. OVER 6.1 m DEPTH CIRCUMFERENTIAL REINFORCEMENT IS INCREASED TO 0.51 mm² STEEL REQUIRED PER mm. TO A MAXIMUM DEPTH OF 9.1 m.

FOR PIPE CONNECTIONS, A RUBBER GASKET IN ACCORDANCE WITH ASTM RUBBER GASKET SPECIFICATIONS C-443 AND CAST INTEGRALLY IN MANHOLE WALL MAY BE USED AS AN ALTERNATE TO EXPANSIVE MORTAR.

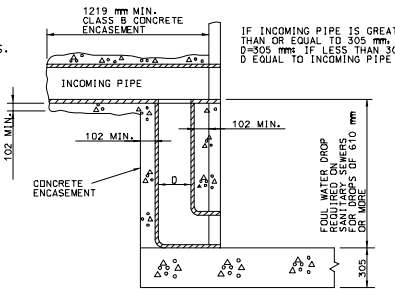

FOUL WATER DROP

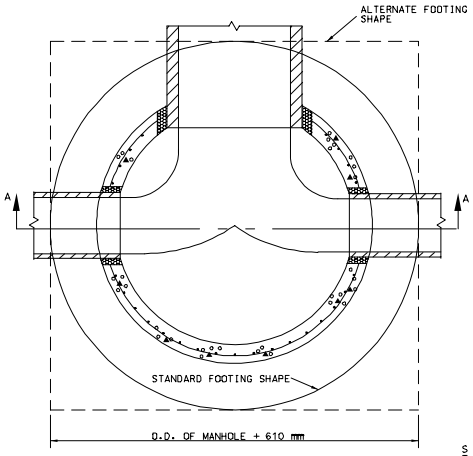

PLAN OF FOOTING

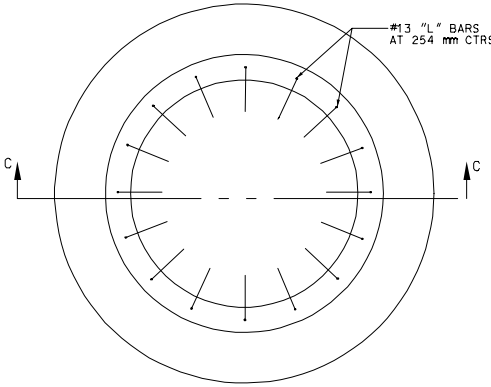

PRECAST FOUNDATION SLAB

FOUNDATION SLAB AND BASE SECTION MAY BE POURED MONOLITHIC OR SEPARATELY WITH A KEYWAY.
INVERT SHALL BE POURED AFTER PLACEMENT OF MANHOLE.

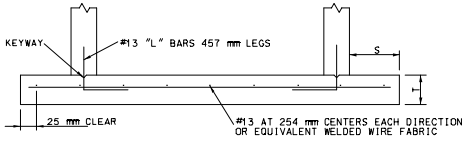

S = 0 mm FOR DEPTHS LESS THAN OR EQUAL TO 1829 mm; S = 229 mm FOR DEPTHS GREATER THAN 1829 mm.
T = 152 mm FOR DEPTHS OR LESS THAN OR EQUAL TO 1829 mm; T = 229 mm FOR DEPTHS GREATER THAN 1829 mm.

SECTION C-C

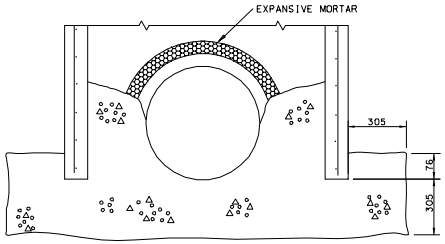

PRECAST BASE SECTION SET ON CONCRETE BLOCKS FOUNDATION SLAB AND INVERT POURED MONOLITHIC.

ALTERNATE FOOTING

MISSOURI HIGHWAY AND TRANSPORTATION COMMISSION

PRECAST MANHOLES

DATE: _____ | EFFECTIVE: 10-01-1998 | M731.00T | 1/1