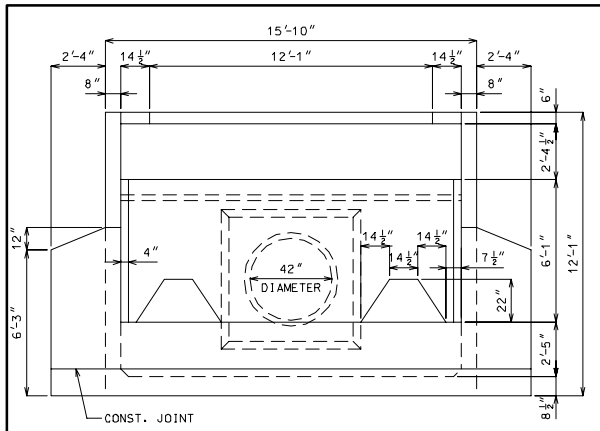

DOWNSTREAM ELEVATION

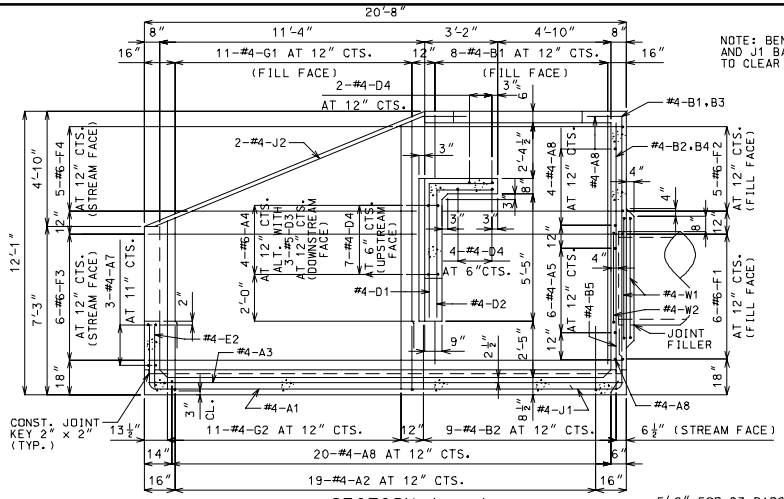

SECTION A – A

NOTE: BEND OR CUT A1 AND J1 BARS IN FIELD TO CLEAR PIPE.

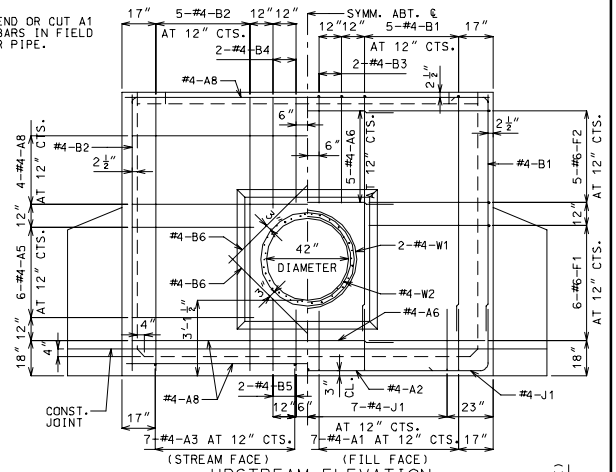

UPSTREAM ELEVATION

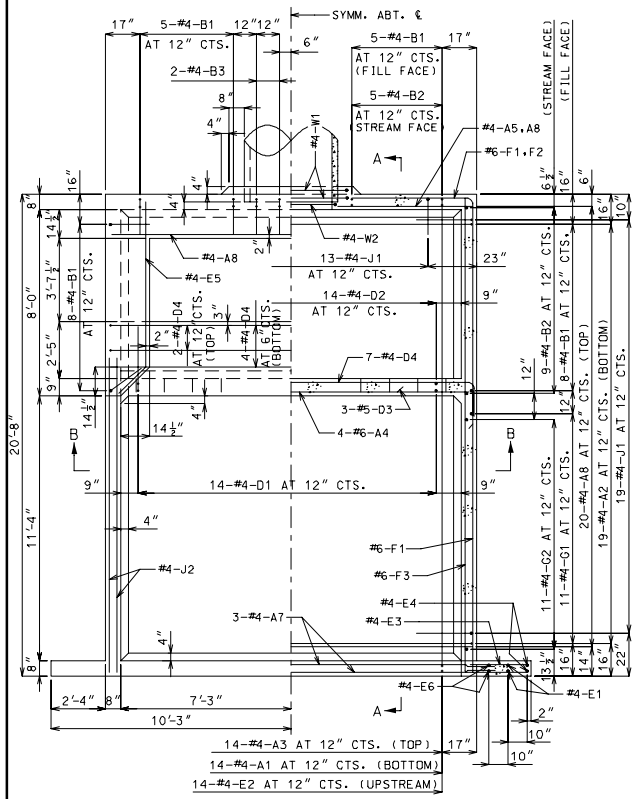

HALF PLAN HALF HORIZONTAL SECTION

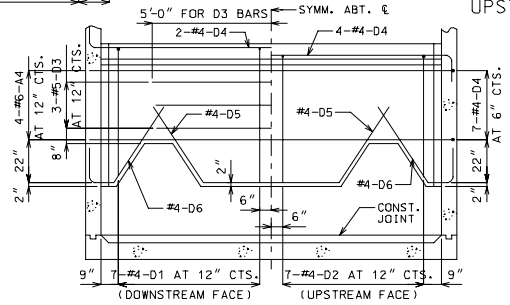

SECTION B-B

NOTE: BEND OR CUT D1 AND D2 BARS IN FIELD TO CLEAR NOTCH IN BAFFLE WALL.

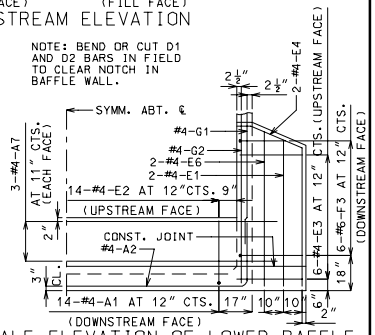

HALF ELEVATION OF LOWER BAFFLE AND WING

COMPLETE BILL OF REINFORCING STEEL

NO. REQ'D	MARK NO. SIZE	MARK	SHAPE NO. VARIES (V)	NO. EACH	DIMENSIONS B FT. IN.	C FT. IN.	D FT. IN.	E FT. IN.	F FT. IN.	H FT. IN.	K FT. IN.	NOMINAL LENGTH FT. IN.	ACTUAL LENGTH FT. IN.	WEIGHT LBS.
14	4	A1	11			2-9	20-4	2-9				25-10	25-8	240
19	4	A2	11			2-10	15-7	2-10				21-3	21-1	268
14	4	A3	20		20-4							20-4	20-4	190
4	6	A4	20		15-7							15-7	15-7	94
12	4	A5	20		5-7							5-7	5-7	45
6	4	A6	20		6-5							6-5	6-5	26
6	4	A7	20		16-9							16-9	16-9	67
26	4	A8	20		15-7							15-7	15-7	271
26	4	B1	19		9-11 1/2	0-19						11-7	11-5	198
28	4	B2	20		11-10							11-10	11-10	221
4	4	B3	19		4-10	0-19						6-5	6-4	17
4	4	B4	20		4-10							4-10	4-10	13
4	4	B5	20		2-6							2-6	2-6	7
4	4	B6	20		5-0							5-0	5-0	13
14	4	D1	19		5-9 1/2	2-10 1/2						8-8	8-7	80
14	4	D2	19		5-5 1/2	2-6						8-0	7-10	73
3	5	D3	20		10-0							10-0	10-0	31
13	4	D4	11			0-12	15-7	0-12				17-7	17-5	151
2	4	D5	15		3-7 3/8	5-10	3-7 3/8	3-0 1/2	2-0	3-0 1/2	2-0	13-1	13-0	17
4	4	D6	14		0-12	0-13 1/2	3-7 3/8			3-0 1/2	2-0	5-9	5-7	15
4	4	E1	20		6-5							6-5	6-5	17
14	4	E2	20		2-10							2-10	2-10	26
12	4	E3	20		2-9							2-9	2-9	22
4	4	E4	25		6-0	2-5	0-6 1/2			0-11 1/2	2-2 1/2	8-11	8-10	24
2	4	E5	15		2-2 3/8	7-3 1/2				0-19	0-19	9-6	9-6	13
4	4	E6	20		6-9							6-9	6-9	18
12	6	F1	19		20-5	5-5 1/2						25-11	25-9	464
10	6	F2	19	V 2	9-8	5-5 1/2						15-2	15-0	
					19-6	5-5 1/2	(INCREMENT = 29 1/2)					25-0	24-10	299
12	6	F3	19		20-5	2-9						23-2	23-0	415
10	6	F4	20	V 2	9-8							9-8	9-8	
					19-6		(INCREMENT = 29 1/2)					19-6	19-6	219
22	4	G1	20	V 2	5-7							5-7	5-7	
					9-6		(INCREMENT = 4 1/2)					9-6	9-6	111
22	4	G2	20	V 2	7-7							7-7	7-7	
					11-6		(INCREMENT = 4 1/2)					11-6	11-6	140
51	4	J1	19		3-3	3-3						6-6	6-5	219
4	4	J2	20		13-10							13-10	13-10	37
2	4	W1	16		4-7 1/2							15-5	15-5	21
1	4	W2	16		3-10 1/2							13-1	13-1	9

ESTIMATED QUANTITIES

ITEM		TOTAL
CLASS B CONCRETE	CU. YD.	28.2
REINFORCING STEEL	LBS.	4,090

BENDING DIAGRAMS

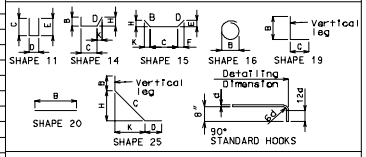

ALL STANDARD HOOKS AND BENDS OTHER THAN 180 DEG. TO BE BENT WITH SAME PROCEDURE AS FOR 90 DEG. STANDARD HOOKS.

HOOKS AND BENDS SHALL BE IN ACCORDANCE WITH THE PROCEDURES AS SHOWN ON THIS SHEET.

NOMINAL LENGTHS ARE BASED ON OUT TO OUT DIMENSIONS SHOWN IN BENDING DIAGRAMS AND ARE LISTED FOR FABRICATORS USE.

PAYWEIGHTS ARE BASED ON ACTUAL LENGTHS.

LENGTH = TOTAL LENGTHS ARE MEASURED ALONG CENTERLINE BAR TO THE NEAREST INCH.

V – BAR DIMENSIONS VARY IN EQUAL INCREMENTS BETWEEN DIMENSIONS SHOWN ON THIS LINE AND THE FOLLOWING LINE.

NO.EA. = NUMBER OF BARS OF EACH LENGTH.

GENERAL NOTES:

DESIGN UNIT STRESSES

CLASS B CONCRETE f'c = 3,000 psi
REINFORCING STEEL (GRADE 60) fy = 60,000 psi

REINFORCING STEEL

MINIMUM CLEARANCE TO REINFORCING STEEL SHALL BE 1 1/2" UNLESS SHOWN OTHERWISE.

DIMENSIONS

DRAWINGS ARE NOT TO SCALE. FOLLOW DIMENSIONS.

MISSOURI HIGHWAY AND TRANSPORTATION COMMISSION

PIPE CULVERT HEADWALL
ENERGY DISSIPATOR (IMPACT TYPE) FOR 42" CONCRETE PIPE

DATE _____ | EFFECTIVE: 07-01-2001 | 604.14E | 1/1