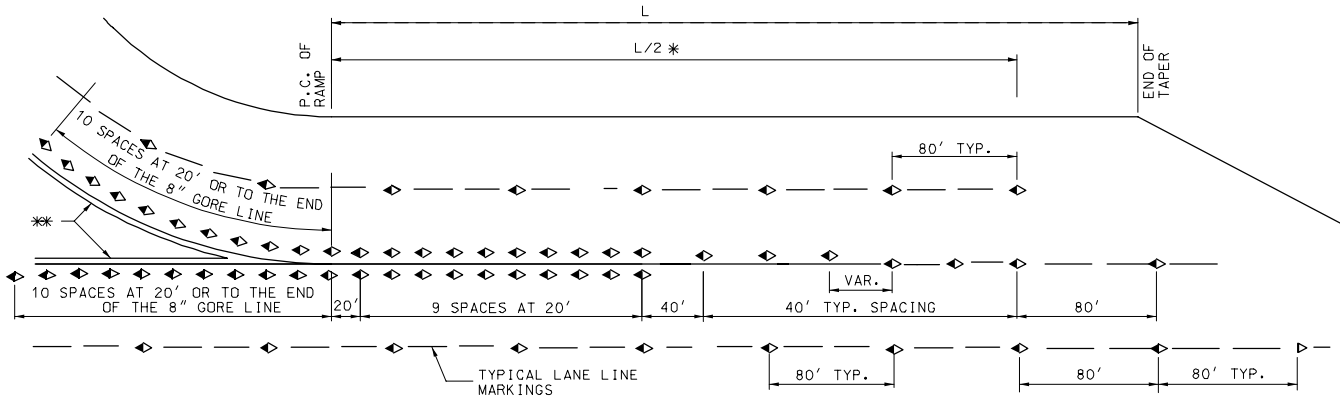

PARALLEL LANE EXIT RAMP (MULTI-LANE)

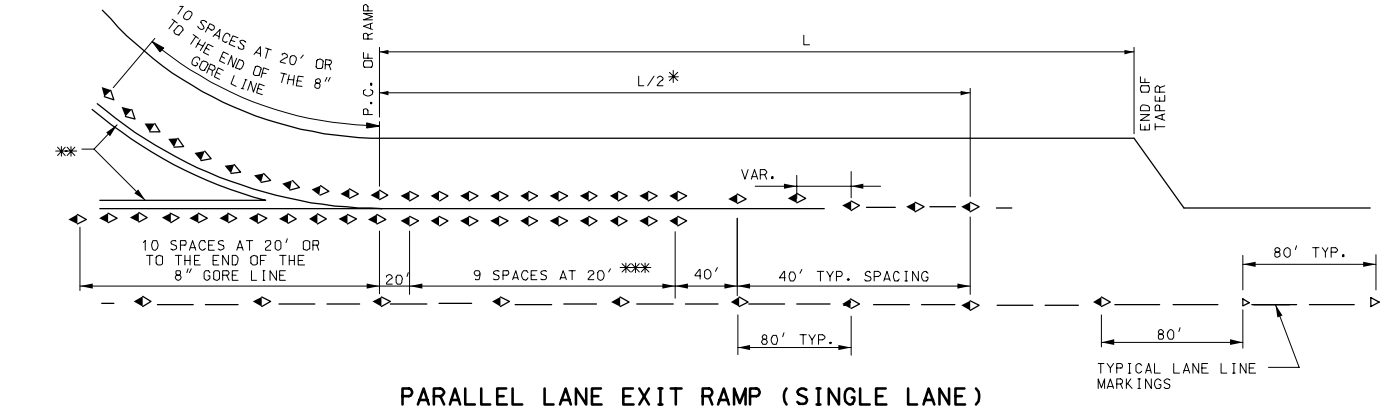

PARALLEL LANE EXIT RAMP (SINGLE LANE)

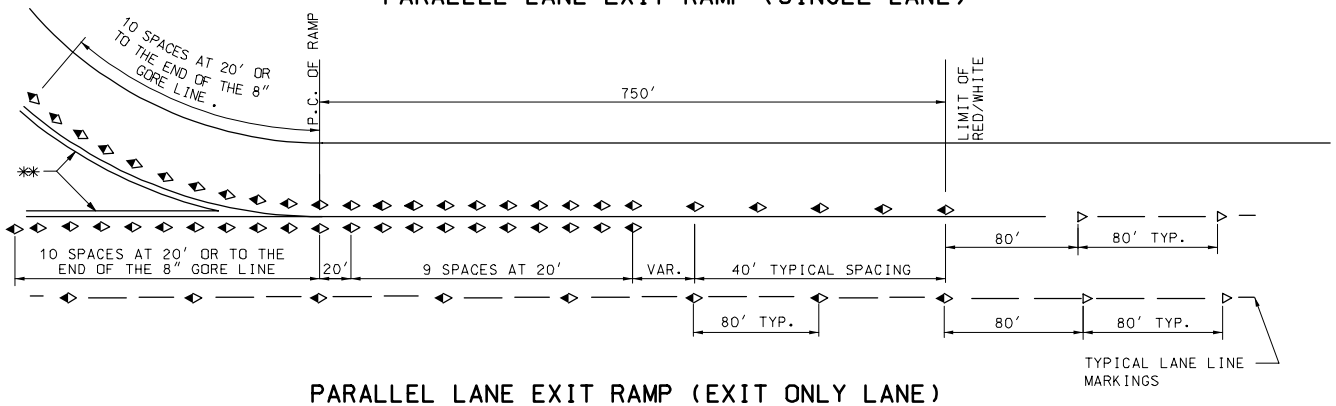

PARALLEL LANE EXIT RAMP (EXIT ONLY LANE)

◆ RED/WHITE SRPM
▷ WHITE SRPM
✳ LIMIT OF SRPM'S
✳✳ 8″ GORE LINE
✳✳✳ IF L/2 IS LESS THAN 200′ THEN USE 20′ SPACING TO END OF SOLID WHITE LINE.
SRPM SNOWPLOWABLE RAISED PAVEMENT MARKER

GENERAL NOTES:

ALL SRPM'S ON DIAMOND INTERCHANGES SHALL BE RED/WHITE SPACED FROM 750 FEET UPSTREAM OF THE P.C. OF THE EXIT RAMP TO THE P.C. OF THE ENTRANCE RAMP, EXCEPT AS OTHERWISE SHOWN.

FOR HALF DIAMOND INTERCHANGE ENTRANCE RAMPS, PLACE THE RED'WHITE SRPM'S ON ADJACENT LANES FROM THE GORE POINT TO 750 FEET UPSTREAM.

DIRECTIONAL INTERCHANGES DO NOT REQUIRE RED/WHITE SRPM'S, HOWEVER, THE ENGINEER MAY ELECT TO INSTALL RED/WHITE MARKERS INSTEAD OF ONE-WAY WHITE SRPM'S.

SRPM'S INSTALLED NEXT TO A SOLID LINE SHALL BE PLACED A MINIMUM OF 2″ AND A MAXIMUM OF 4″ OFF THE LINE.

SRPM'S INSTALLED FOR LANE LINE DELINEATION SHALL BE INSTALLED IN LINE WITH THE PAVEMENT MARKINGS AND PLACED IN THE CENTER OF THE GAP. LONGITUDINAL AND TRANSVERSE DEVIATIONS SHALL BE KEPT TO A MINIMUM. THE SRPM'S SHALL BE INSTALLED SO THAT THEY ARE ALIGNED TRANSVERSELY.

SRPM'S INSTALLED FOR LANE LINE MARKINGS ON MULTILANE EXIT RAMPS ARE TO BE TERMINATED APPROXIMATELY ADJACENT TO THE LAST MARKER INSTALLED IN THE GORE. INTERSTATE-INTERSTATE INTERCHANGES AND COLLECTOR DISTRIBUTORS ARE THE ONLY EXCEPTIONS. FOR INSTALLATION DIAGRAM SEE COLLECTOR DISTRIBUTOR EXIT RAMP ON SHEET 2 OF 4.

SRPM'S SHALL BE PLACED IN THE FIRST GAP AFTER TRANSITIONING FROM A SOLID TO AN INTERMITTENT LANE LINE.

ENTRANCE AND EXIT RAMP SRPM'S SHALL BE ALIGNED TRANSVERSELY WITH LANE LINE SRPM'S WHEN MARKING THE TRANSITION TO THE 80 FOOT SPACING.

A LONGITUDINAL ADJUSTMENT TO THE LOCATION OF THE MARKER SHALL BE MADE IN ORDER TO AVOID DAMAGE TO DETERIORATED PAVEMENTS OR TRANSVERSE JOINTS

IN LOCATIONS WHERE CONCRETE AND BITUMINOUS SURFACES ABUT, THE SRPM SHALL BE INSTALLED IN THE CONCRETE SURFACE.

MARKERS SHALL BE OFFSET A MINIMUM OF 2″ FROM LONGITUDINAL JOINT AND MINIMUM OF 6″ FROM TRANSVERSE JOINT.

DRAWINGS ARE NOT TO SCALE.

MISSOURI HIGHWAYS AND TRANSPORTATION COMMISSION

SNOWPLOWABLE RAISED PAVEMENT MARKERS

EXIT AND ENTRANCE RAMPS

DATE:_____	EFFECTIVE: 01-01-2003	620.20	1/4

◆▷ RED/WHITE SRPM

▷ WHITE SRPM

✱✱ 8″ GORE LINE

SRPM SNOWPLOWABLE RAISED PAVEMENT MARKER

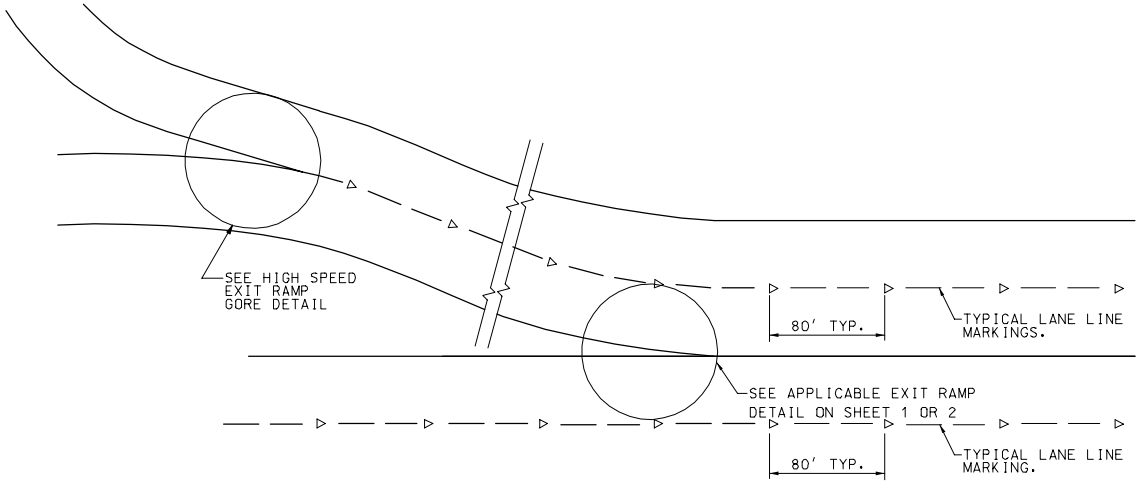

COLLECTOR DISTRIBUTOR EXIT RAMP

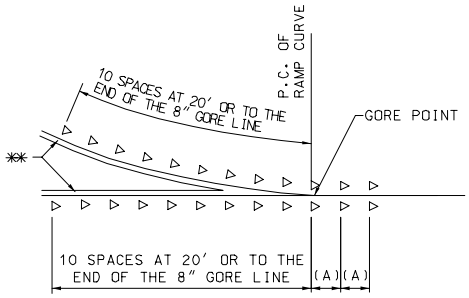

HIGH SPEED EXIT RAMP GORE DETAIL

(A) 20′ (TYP.) SPACING FOR THE FIRST 200′ FROM THE GORE POINT THEN 40′ SPACING TO THE END OF THE SOLID WHITE LINE.

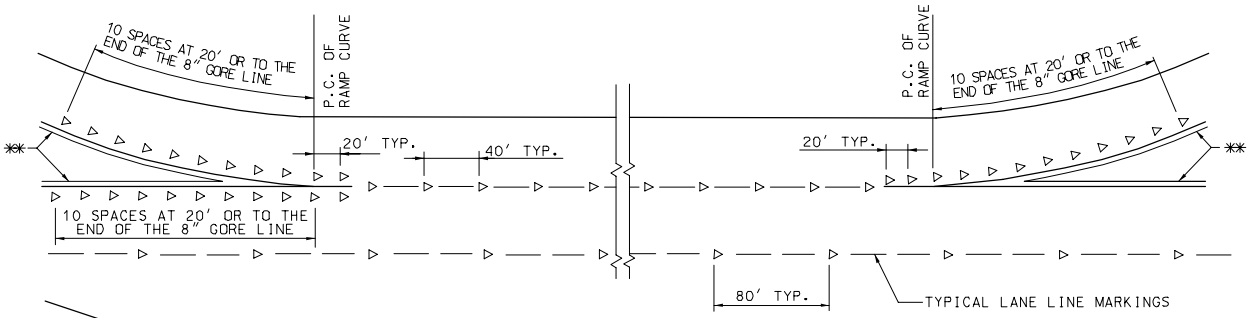

CLOVER LEAF

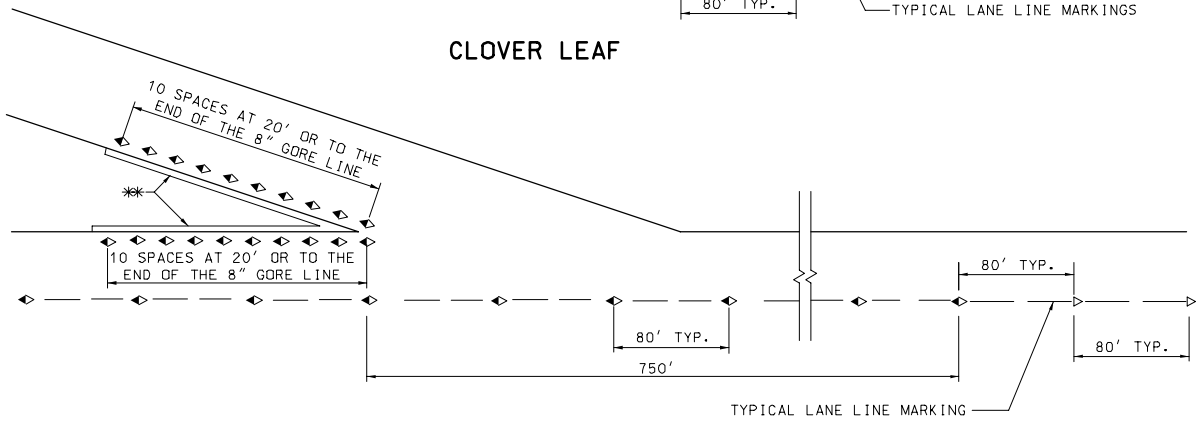

TAPERED LANE EXIT RAMP

NOTES:

FOR HIGH SPEED MULTI-LANE EXIT RAMPS, CONTINUE LANE LINE SRPM'S THROUGH THE LENGTH OF THE MULTI-LANE SECTION.

MISSOURI HIGHWAYS AND TRANSPORTATION COMMISSION			
	SNOWPLOWABLE RAISED PAVEMENT MARKERS EXIT AND ENTRANCE RAMPS		
DATE:_____	EFFECTIVE: 01-01-2003	620.20	2/4

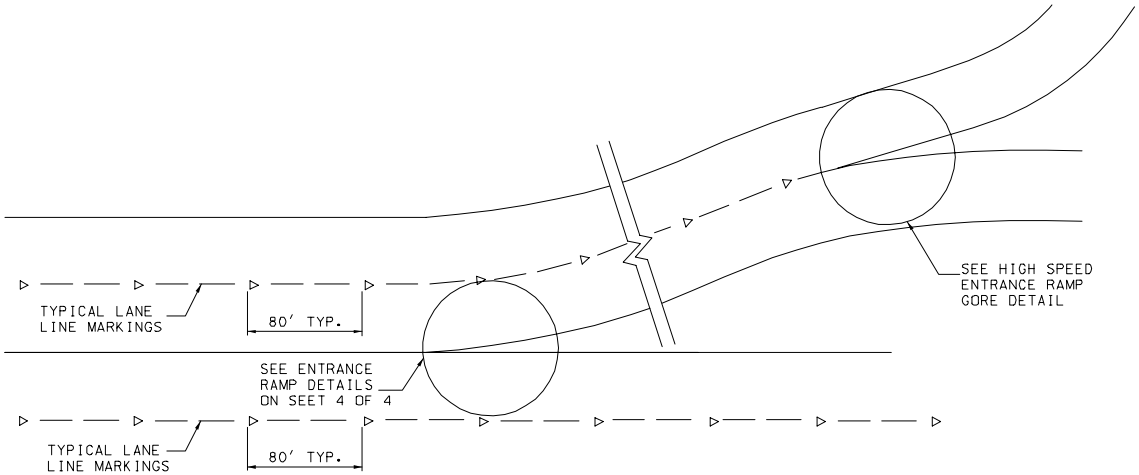

COLLECTOR DISTRIBUTOR ENTRANCE RAMP

◆▷ RED/WHITE SRPM

▷ WHITE SRPM

✱✱ 8″ GORE LINE

SRPM SNOWPLOWABLE RAISED PAVEMENT MARKER

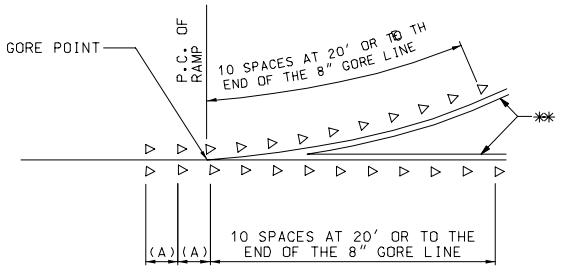

HIGH SPEED ENTRANCE RAMP
GORE DETAIL

(A) 20′ (TYP.) SPACING FOR THE FIRST 200′ FROM THE GORE POINT THEN 40′ SPACING TO THE END OF THE SOLID WHITE LINE.

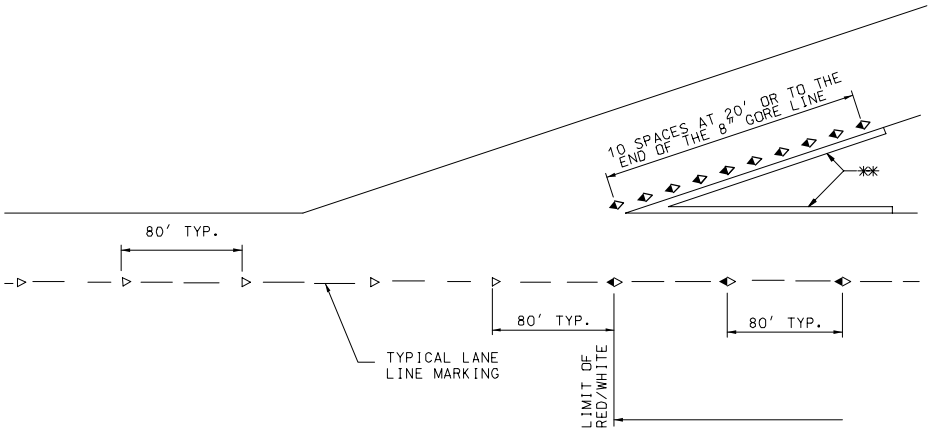

TAPERED LANE ENTRANCE RAMP

MISSOURI HIGHWAYS AND TRANSPORTATION COMMISSION			
	SNOWPLOWABLE RAISED PAVEMENT MARKERS EXIT AND ENTRANCE RAMPS		
DATE:_____	EFFECTIVE: 01-01-2003	620.20	3/4

◆▷ RED/WHITE SRPM

▷ WHITE SRPM

✳ LIMIT OF RED/WHITE SRPM'S

✳✳ 8" GORE LINE

SRPM SNOWPLOWABLE RAISED PAVEMENT MARKER

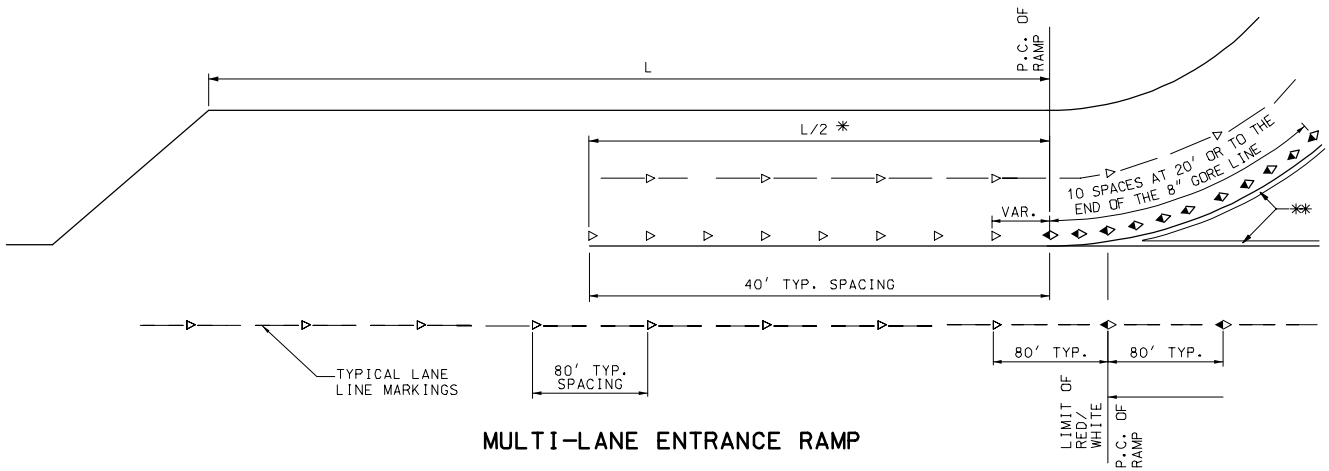

MULTI-LANE ENTRANCE RAMP

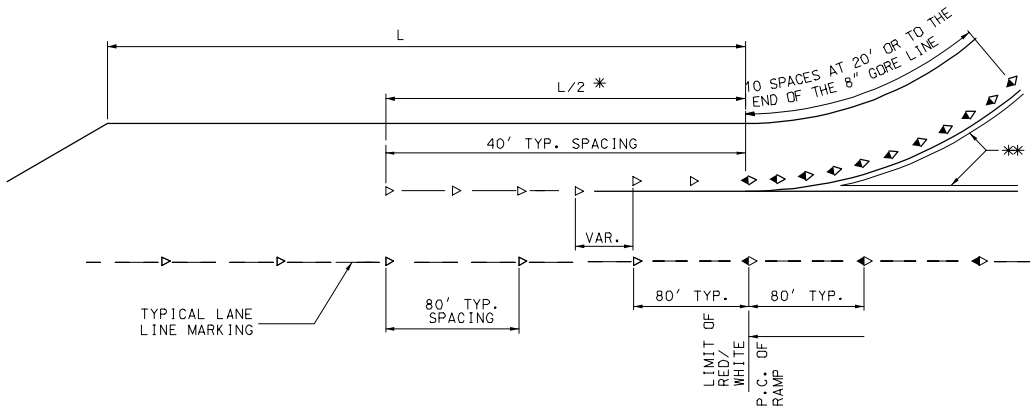

SINGLE LANE ENTRANCE RAMP

MISSOURI HIGHWAYS AND TRANSPORTATION COMMISSION			
	SNOWPLOWABLE RAISED PAVEMENT MARKERS EXIT AND ENTRANCE RAMPS		
DATE:_____	EFFECTIVE: 01-01-2003	620.20	4/4