Span (S) = 4 ft

HT (ft) = 4 or 5

	DESIGN FILL	MEMBER THICKNESSES				TOP SLAB BARS								BOTTOM SLAB BARS						WALL BARS							COEFFICIENTS (see note)							"C" Multiplier	"K" Multiplier	
		TS	BS	TX	TI	A1	Bars	J3	Bars	H1	Bars	H2	Bars	A2	Bars	J4	Bars	H3	Bars	B1	Bars	B2 Bars			F	Bars	J4		H3	J3		H1		H2	S = 4 ft	HT = 4 ft	HT = 5 ft
	(ft-in)	Thick	Thick.	Thick	Thick.	Size	c to c	Size	c to c	Size	c to c	Size	c to c	Size	c to c	Size	c to c	Size	c to c	Size	c to c	G1	Size	c to c	Size	c to c	C4	K3	C7	C1	K2	C5	C6			in	in	in
HS20	0'-10"	10	8	8	8	4	8.5	4	11.5	4	22.5	4	22.5	4	11.5	4	11.5	4	9.0	5	11.5	12	5	11.5	4	14.0	0.55	0.88	0.58	0.56	0.45	0.92	0.45			56	61	73
	2'-7"	8	8	8	8	4	11.5	4	11.5	4	23.5	4	23.5	4	11.5	4	11.5	4	11.0	5	11.5	12	5	11.5	4	14.0	0.52	0.91	0.53	0.57	0.44	0.92	0.36			56	59	71
	4'-3"	8	8	8	8	4	11.5	4	11.5	4	23.5	4	23.5	4	11.5	4	11.5	4	11.5	5	11.5	12	5	11.5	4	14.0	0.50	0.91	0.48	0.51	0.44	0.49	0.33			56	59	71
	5'-11"	8	8	8	8	4	11.5	4	11.5	4	23.5	4	23.5	4	11.5	4	11.5	4	11.5	5	11.5	12	5	11.5	4	14.0	0.48	0.91	0.47	0.49	0.44	0.51	0.34			56	59	71
	7'-6"	8	8	8	8	4	11.5	4	11.5	4	23.5	4	23.5	4	11.5	4	11.5	4	11.5	5	11.5	0	5	11.5	4	14.0	0.48	0.91	0.47	0.48	0.44	0.49	0.35			56	59	71
HS20 MOD	0'-8"	12	8	8	8	4	7.0	4	9.5	4	18.5	4	18.5	4	11.5	4	11.5	4	7.5	5	11.5	12	5	11.5	4	14.0	0.55	0.87	0.58	0.56	0.47	0.92	0.47			56	63	75
	2'-7"	8	8	8	8	4	11.5	4	11.5	4	23.5	4	23.5	4	11.5	4	11.5	4	9.0	5	11.5	12	5	11.5	4	14.0	0.52	0.91	0.55	0.62	0.44	0.92	0.40			56	59	71
	4'-3"	8	8	8	8	4	11.5	4	11.5	4	23.5	4	23.5	4	11.5	4	11.5	4	11.5	5	11.5	12	5	11.5	4	14.0	0.50	0.91	0.48	0.51	0.44	0.50	0.35			56	59	71
	5'-11"	8	8	8	8	4	11.5	4	11.5	4	23.5	4	23.5	4	11.5	4	11.5	4	11.5	5	11.5	12	5	11.5	4	14.0	0.48	0.91	0.47	0.49	0.44	0.52	0.36			56	59	71
	7'-6"	8	8	8	8	4	11.5	4	11.5	4	23.5	4	23.5	4	11.5	4	11.5	4	11.5	5	11.5	0	5	11.5	4	14.0	0.48	0.91	0.47	0.48	0.44	0.50	0.35			56	59	71
HS20 or HS20 MOD	9'-2"	8	8	8	8	4	11.5	4	11.5	4	23.5	4	23.5	4	11.5	4	11.5	4	11.5	5	11.5	0	5	11.5	4	14.0	0.47	0.91	0.45	0.47	0.44	0.46	0.33			56	59	71
	10'-10"	8	8	8	8	4	11.5	4	11.5	4	23.5	4	23.5	4	11.5	4	11.5	4	11.5	5	11.5	0	5	11.5	4	14.0	0.47	0.91	0.45	0.47	0.44	0.46	0.34			56	59	71
	12'-5"	8	8	8	8	4	11.5	4	11.5	4	23.5	4	23.5	4	11.5	4	11.5	4	11.5	5	11.5	0	5	11.5	4	14.0	0.46	0.91	0.45	0.46	0.44	0.46	0.34			56	59	71
	14'-1"	8	8	8	8	4	11.5	4	11.5	4	23.5	4	23.5	4	11.5	4	11.5	4	11.5	5	11.5	0	5	11.5	4	14.0	0.46	0.91	0.45	0.46	0.44	0.46	0.34			56	59	71
	15'-9"	8	8	8	8	4	11.5	4	11.5	4	23.5	4	23.5	4	11.5	4	11.5	4	11.0	5	11.5	0	5	11.5	4	14.0	0.46	0.91	0.45	0.46	0.44	0.46	0.37			56	59	71
	17'-5"	8	8	8	8	4	11.5	4	11.5	4	23.5	4	23.5	4	11.5	4	11.5	4	10.5	5	11.5	0	5	11.5	4	14.0	0.45	0.91	0.45	0.45	0.44	0.46	0.37			56	59	71
	19'-0"	8	9	8	8	4	11.5	4	11.5	4	23.5	4	23.5	4	12.5	4	11.5	4	12.0	5	11.5	0	5	11.5	4	14.0	0.45	0.91	0.45	0.45	0.43	0.46	0.37			56	60	72
	20'-8"	8	9	8	8	4	11.5	4	11.5	4	23.5	4	23.5	4	12.5	4	11.5	4	11.0	5	11.5	0	5	11.5	4	14.0	0.45	0.91	0.45	0.45	0.43	0.46	0.37			56	60	72
	22'-4"	8	9	8	8	4	11.5	4	11.5	4	22.5	4	22.5	4	12.5	4	11.5	4	10.5	5	11.5	0	5	11.5	4	14.0	0.45	0.91	0.45	0.45	0.43	0.46	0.37			56	60	72
	23'-11"	8	10	8	8	4	11.5	4	11.5	4	21.0	4	21.0	4	12.0	4	11.5	4	10.0	5	11.5	0	5	11.5	4	14.0	0.45	0.91	0.45	0.45	0.42	0.47	0.37			56	61	73
	25'-7"	8	10	8	8	4	11.5	4	11.0	4	19.5	4	19.5	4	12.5	4	11.5	4	11.5	5	11.5	0	5	11.5	4	14.0	0.45	0.91	0.44	0.45	0.42	0.47	0.37			56	61	73
	27'-3"	8	10	8	8	4	11.5	4	10.5	4	18.5	4	18.5	4	12.0	4	11.5	4	11.0	5	11.5	0	5	11.5	4	14.0	0.45	0.91	0.44	0.45	0.42	0.47	0.37			56	61	73
	28'-9"	9	10	8	8	4	12.5	4	10.5	4	20.5	4	20.5	4	11.5	4	11.0	4	9.5	5	11.5	0	5	11.5	4	14.0	0.45	0.90	0.45	0.45	0.43	0.46	0.37			56	62	74
	30'-5"	9	11	8	8	4	12.0	4	9.5	4	19.5	4	19.5	4	11.0	4	10.5	4	9.5	5	11.5	0	5	11.5	4	14.0	0.45	0.90	0.44	0.45	0.42	0.47	0.37			56	63	75
	32'-1"	9	11	8	8	4	11.5	4	9.0	4	18.5	4	18.5	4	11.5	4	10.5	4	11.0	5	11.5	0	5	11.5	4	14.0	0.45	0.90	0.44	0.45	0.42	0.47	0.37			56	63	75

SPAN (S) = 4 ft

HT (ft) = 6 or 7

	DESIGN FILL	MEMBER THICKNESSES				TOP SLAB BARS								BOTTOM SLAB BARS						WALL BARS							COEFFICIENTS (see note)							"C" Multiplier	"K" Multiplier	
		TS	BS	TX	TI	A1	Bars	J3	Bars	H1	Bars	H2	Bars	A2	Bars	J4	Bars	H3	Bars	B1	Bars	B2 Bars			F	Bars	J4		H3	J3		H1		H2	S = 4 ft	HT = 6 ft	HT = 7 ft
	(ft-in)	Thick	Thick.	Thick	Thick.	Size	c to c	Size	c to c	Size	c to c	Size	c to c	Size	c to c	Size	c to c	Size	c to c	Size	c to c	G1	Size	c to c	Size	c to c	C4	K3	C7	C1	K2	C5	C6			in	in	in
HS20	0'-10"	10	8	8	8	4	8.0	4	11.5	4	21.0	4	21.0	4	11.5	4	11.0	4	9.0	5	11.5	12	5	11.5	4	14.0	0.68	0.91	0.58	0.56	0.33	0.92	0.46			56	85	97
	2'-7"	8	8	8	8	4	11.5	4	11.5	4	23.5	4	23.5	4	11.5	4	11.5	4	10.5	5	11.5	12	5	11.5	4	14.0	0.65	0.93	0.53	0.56	0.31	0.92	0.36			56	83	95
	4'-3"	8	8	8	8	4	11.5	4	11.5	4	23.5	4	23.5	4	11.5	4	11.5	4	11.5	5	11.5	12	5	11.5	4	14.0	0.63	0.93	0.48	0.59	0.31	0.92	0.34			56	83	95
	5'-11"	8	8	8	8	4	11.5	4	11.5	4	23.5	4	23.5	4	11.5	4	11.5	4	11.5	5	11.5	12	5	11.5	4	14.0	0.61	0.93	0.47	0.64	0.31	0.51	0.35			56	83	95
	7'-6"	8	8	8	8	4	11.5	4	11.5	4	23.5	4	23.5	4	11.5	4	11.5	4	11.5	5	11.5	0	5	11.5	4	14.0	0.60	0.93	0.46	0.62	0.31	0.49	0.35			56	83	95
HS20 MOD	0'-9"	11	8	8	8	4	7.0	4	11.0	4	17.5	4	17.5	4	11.5	4	10.5	4	7.5	5	11.5	12	5	11.5	4	14.0	0.68	0.90	0.58	0.56	0.34	0.92	0.48			56	86	98
	2'-7"	8	8	8	8	4	11.5	4	11.5	4	23.5	4	23.5	4	11.5	4	11.5	4	9.0	5	11.5	12	5	11.5	4	14.0	0.65	0.93	0.55	0.56	0.31	0.92	0.42			56	83	95
	4'-3"	8	8	8	8	4	11.5	4	11.5	4	23.5	4	23.5	4	11.5	4	11.5	4	11.5	5	11.5	12	5	11.5	4	14.0	0.63	0.93	0.48	0.59	0.31	0.92	0.34			56	83	95
	5'-11"	8	8	8	8	4	11.5	4	11.5	4	23.5	4	23.5	4	11.5	4	11.5	4	11.5	5	11.5	12	5	11.5	4	14.0	0.61	0.93	0.47	0.64	0.31	0.52	0.35			56	83	95
	7'-6"	8	8	8	8	4	11.5	4	11.5	4	23.5	4	23.5	4	11.5	4	11.5	4	11.5	5	11.5	0	5	11.5	4	14.0	0.60	0.93	0.46	0.62	0.31	0.50	0.35			56	83	95
HS20 or HS20 MOD	9'-2"	8	8	8	8	4	11.5	4	11.5	4	23.5	4	23.5	4	11.5	4	11.0	4	11.5	5	11.5	0	5	11.5	4	14.0	0.59	0.93	0.45	0.61	0.31	0.46	0.32			56	83	95
	10'-10"	8	8	8	8	4	11.5	4	11.5	4	23.5	4	23.5	4	11.5	4	9.5	4	11.5	5	11.5	0	5	11.5	4	14.0	0.58	0.93	0.45	0.60	0.31	0.46	0.34			56	83	95
	12'-5"	8	8	8	8	4	11.5	4	11.5	4	23.5	4	23.5	4	11.5	4	9.0	4	11.5	5	11.5	0	5	11.5	4	14.0	0.57	0.93	0.45	0.59	0.31	0.46	0.34			56	83	95
	14'-1"	8	8	8	8	4	11.5	4	11.0	4	23.5	4	23.5	4	11.5	4	8.0	4	11.5	5	11.5	0	5	11.5	4	14.0	0.57	0.93	0.45	0.58	0.31	0.45	0.34			56	83	95
	15'-9"	8	8	8	8	4	11.5	4	9.5	4	23.5	4	23.5	4	11.5	4	7.0	4	11.5	5	11.5	0	5	11.5	4	14.0	0.56	0.93	0.45	0.58	0.31	0.45	0.37			56	83	95
	17'-5"	8	9	8	8	4	11.5	4	9.0	4	23.5	4	23.5	4	11.5	4	8.5	4	11.0	5	11.5	0	5	11.5	4	14.0	0.57	0.93	0.45	0.57	0.31	0.45	0.37			56	84	96
	19'-0"	8	9	8	8	4	11.5	4	8.0	4	23.5	4	23.5	4	12.5	4	8.0	4	12.5	5	11.5	0	5	11.5	4	14.0	0.57	0.93	0.44	0.57	0.31	0.46	0.37			56	84	96
	20'-8"	8	9	8	8	4	11.5	4	7.0	4	23.5	4	23.5	4	12.5	4	7.0	4	12.0	5	11.5	0	5	11.5	4	14.0	0.57	0.93	0.44	0.56	0.31	0.46	0.37			56	84	96
	22'-4"	8	9	8	8	4	11.5	4	7.0	4	23.5	4	23.5	4	12.5	4	7.0	4	11.0	5	11.5	0	5	11.5	4	14.0	0.56	0.93	0.44	0.56	0.31	0.46	0.37			56	84	96
	23'-11"	8	10	9	8	4	11.5	4	8.0	4	22.5	4	22.5	4	12.5	4	8.0	4	13.0	5	11.5	0	5	11.5	4	14.0	0.57	0.93	0.44	0.56	0.31	0.45	0.37			57	85	97
	25'-7"	8	10	9	8	4	11.5	4	7.5	4	21.5	4	21.5	4	13.0	4	7.5	4	12.5	5	11.5	0	5	11.5	4	14.0	0.56	0.93	0.43	0.56	0.30	0.46	0.37			57	85	97
	27'-3"	8	10	9	8	4	11.5	4	7.0	4	20.0	4	20.0	4	12.5	4	7.0	4	11.5	5	11.5	0	5	11.5	4	14.0	0.56	0.93	0.43	0.55	0.30	0.46	0.37			57	85	97
	28'-10"	8	10	9	8	4	11.5	4	7.0	4	18.5	4	18.5	4	12.0	4	7.0	4	11.0	5	11.5	0	5	11.5	4	14.0	0.56	0.93	0.44	0.55	0.30	0.46	0.37			57	85	97
	30'-5"	9	10	10	8	4	12.5	4	7.5	4	21.5	4	21.5	4	11.0	4	7.0	4	9.5	5	11.5	0	5	11.5	4	14.0	0.56	0.92	0.44	0.56	0.31	0.45	0.36			57	86	98
	32'-1"	9	11	10	8	4	12.5	4	7.0	4	20.0	4	20.0	4	12.0	4	7.0	4	11.0	5	11.5	0	5	11.5	4	14.0	0.57	0.92	0.43	0.56	0.31	0.45	0.36			57	87	99

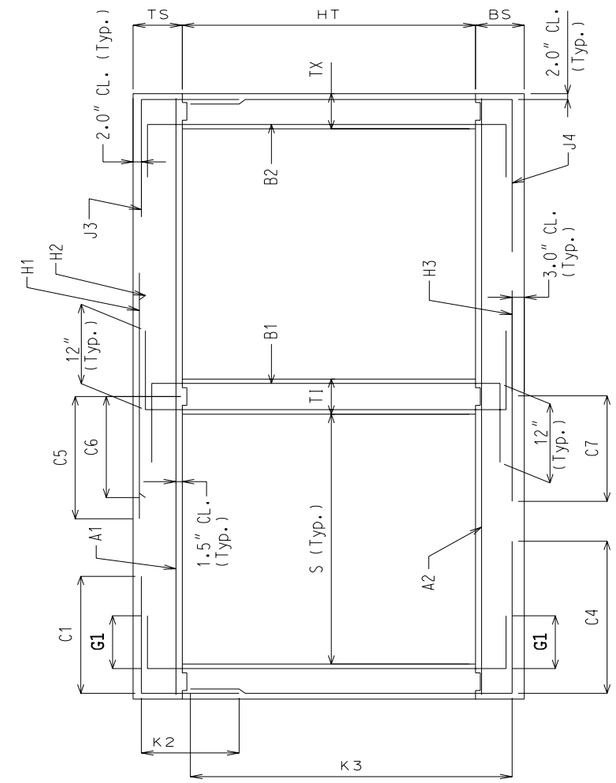

SECTION THRU BOX

NOTE: IF DESIGN FILL FALLS BETWEEN TABULATED FILLS, USE THE ADJACENT TABULATED FILL WHICH YIELDS THE GREATER MEMBER THICKNESS. IF THE MEMBER THICKNESSES ARE EQUAL, USE THE ADJACENT TABULATED FILL WHICH YIELDS THE GREATER AREA OF REINFORCEMENT.

SPECIAL DESIGNS ARE REQUIRED WHEN THE DESIGN FILL IS OUTSIDE THE RANGE OF TABULATED FILLS.

ALL DIMENSIONS ARE IN inch UNLESS OTHERWISE SPECIFIED.

COEFFICIENTS: DIMENSIONS MARKED WITH C# OR K# ARE THE PRODUCT OF THE COEFFICIENT AND ITS ASSOCIATED MULTIPLIER.

DESIGN FILL HEIGHT GIVEN IN THE TABLES IS THE HEIGHT FROM THE TOP OF THE EARTH FILL OR ROADWAY TO THE TOP OF THE TOP SLAB.

ALL CULVERTS MEET STRENGTH REQUIREMENTS FOR MILITARY 24 kips TANDEM AXLE LOADING.

MISSOURI HIGHWAY AND TRANSPORTATION COMMISSION

CONCRETE DOUBLE BOX CULVERT

MEMBER SIZES AND REINFORCEMENT

(HS20 & HS20 MOD. LOADING)

DATE:	EFFECTIVE: 04-01-2002	703.45B	1/13

DESIGN FILL	MEMBER THICKNESSES				Span (S) = 5 ft, HT (ft) = 4 or 5 or 6																																			
					TOP SLAB BARS								BOTTOM SLAB BARS						WALL BARS							COEFFICIENTS (see note)										"C" Multiplier	"K" Multiplier		
	TS	BS	TX	TI	A1	Bars	J3	Bars	H1	Bars	H2	Bars	A2	Bars	J4	Bars	H3	Bars	B1	Bars	B2 Bars			F	Bars	J4	H3		J3		H1		H2				S = 5 ft	HT = 4 ft	HT = 5 ft	HT = 6 ft
(ft-in)	Thick	Thick.	Thick	Thick.	Size	c to c	Size	c to c	Size	c to c	Size	c to c	Size	c to c	Size	c to c	Size	c to c	Size	c to c	G1	Size	c to c	Size	c to c	C4	K3	C7	C1	K2	C5		C6				in	in	in	in
HS20																																								
0'-10"	10	8	8	8	4	7.0	4	11.5	4	23.5	4	23.5	4	11.5	4	9.5	4	6.0	5	11.5	12	5	11.5	4	14.0	0.51	0.90	0.53	0.51	0.45	0.88		0.47				68	61	73	85
2'-7"	8	8	8	8	4	11.0	4	11.5	4	23.5	4	23.5	4	11.5	4	11.5	4	7.0	5	11.5	12	5	11.5	4	14.0	0.47	0.92	0.50	0.55	0.44	0.88		0.37				68	59	71	83
4'-3"	8	8	8	8	4	11.5	4	11.5	4	23.5	4	23.5	4	11.5	4	11.5	4	9.5	5	11.5	12	5	11.5	4	14.0	0.45	0.92	0.45	0.47	0.44	0.48		0.34				68	59	71	83
5'-11"	8	8	8	8	4	11.5	4	11.5	4	23.5	4	23.5	4	11.5	4	11.5	4	10.0	5	11.5	12	5	11.5	4	14.0	0.44	0.92	0.43	0.44	0.44	0.47		0.34				68	59	71	83
7'-6"	8	8	8	8	4	11.5	4	11.5	4	23.5	4	23.5	4	11.5	4	11.5	4	9.5	5	11.5	0	5	11.5	4	14.0	0.43	0.92	0.43	0.43	0.44	0.45		0.33				68	59	71	83
HS20 MOD																																								
0'-9"	11	9	8	8	4	6.0	4	11.0	4	21.0	4	21.0	4	12.5	4	9.5	4	6.0	5	11.5	12	5	11.5	4	14.0	0.51	0.89	0.55	0.51	0.46	0.88		0.50				68	63	75	87
2'-7"	8	9	8	8	4	9.0	4	11.5	4	20.5	4	20.5	4	12.5	4	11.5	4	7.0	5	11.5	12	5	11.5	4	14.0	0.48	0.92	0.53	0.61	0.43	0.88		0.37				68	60	72	84
4'-3"	8	8	8	8	4	11.5	4	11.5	4	23.5	4	23.5	4	11.5	4	11.5	4	8.5	5	11.5	12	5	11.5	4	14.0	0.45	0.92	0.46	0.48	0.44	0.49		0.34				68	59	71	83
5'-11"	8	8	8	8	4	11.5	4	11.5	4	23.5	4	23.5	4	11.5	4	11.5	4	9.0	5	11.5	12	5	11.5	4	14.0	0.44	0.92	0.44	0.44	0.44	0.48		0.34				68	59	71	83
7'-6"	8	8	8	8	4	11.5	4	11.5	4	23.5	4	23.5	4	11.5	4	11.5	4	9.0	5	11.5	0	5	11.5	4	14.0	0.43	0.92	0.43	0.43	0.44	0.46		0.34				68	59	71	83
HS20 or HS20 MOD																																								
9'-2"	8	8	8	8	4	11.5	4	11.5	4	23.5	4	23.5	4	11.5	4	11.5	4	8.5	5	11.5	0	5	11.5	4	14.0	0.42	0.92	0.43	0.42	0.44	0.43		0.33				68	59	71	83
10'-10"	8	8	8	8	4	11.5	4	11.5	4	23.0	4	23.0	4	11.5	4	11.5	4	7.5	5	11.5	0	5	11.5	4	14.0	0.41	0.92	0.43	0.42	0.44	0.43		0.33				68	59	71	83
12'-5"	8	8	8	8	4	11.5	4	11.5	4	23.5	4	23.5	4	11.5	4	11.5	4	8.0	5	11.5	0	5	11.5	4	14.0	0.41	0.92	0.42	0.41	0.44	0.42		0.32				68	59	71	83
14'-1"	8	9	8	8	4	11.5	4	11.5	4	21.0	4	21.0	4	11.5	4	11.5	4	9.5	5	11.5	0	5	11.5	4	14.0	0.41	0.92	0.41	0.41	0.43	0.43		0.33				68	60	72	84
15'-9"	8	9	8	8	4	11.5	4	11.5	4	19.0	4	19.0	4	11.5	4	11.0	4	8.5	5	11.5	0	5	11.5	4	14.0	0.41	0.92	0.41	0.41	0.43	0.43		0.33				68	60	72	84
17'-5"	8	9	8	8	4	11.5	4	10.5	4	17.0	4	17.0	4	11.0	4	10.5	4	7.5	5	11.5	0	5	11.5	4	14.0	0.40	0.92	0.41	0.41	0.43	0.43		0.33				68	60	72	84
19'-0"	8	10	8	8	4	11.0	4	9.0	4	15.5	4	15.5	4	11.0	4	9.5	4	9.0	5	11.5	0	5	11.5	4	14.0	0.40	0.92	0.40	0.41	0.42	0.43		0.33				68	61	73	85
20'-8"	8	10	8	8	4	10.0	4	9.0	4	14.5	4	14.5	4	10.0	4	9.0	4	8.5	5	11.5	0	5	11.5	4	14.0	0.40	0.92	0.40	0.40	0.42	0.43		0.33				68	61	73	85
22'-3"	9	11	8	8	4	11.0	4	8.5	4	15.5	4	15.5	4	10.0	4	9.0	4	7.0	5	11.5	0	5	11.5	4	14.0	0.40	0.91	0.41	0.40	0.42	0.43		0.33				68	63	75	87
23'-10"	9	11	8	8	4	10.0	4	8.0	4	14.5	4	14.5	4	10.0	4	8.5	4	8.0	5	11.5	0	5	11.5	4	14.0	0.40	0.91	0.41	0.40	0.42	0.43		0.33				68	63	75	87
25'-5"	10	11	8	8	4	9.5	4	7.0	4	13.5	4	13.5	4	9.0	4	8.0	4	7.0	5	11.5	0	5	11.5	4	14.0	0.40	0.91	0.41	0.40	0.43	0.43		0.33				68	64	76	88
27'-1"	10	12	8	8	4	10.0	4	7.0	4	14.5	4	14.5	4	9.0	4	7.0	4	7.0	5	11.5	0	5	11.5	4	14.0	0.40	0.90	0.41	0.40	0.43	0.43		0.33				68	65	77	89
28'-8"	10	12	9	8	4	9.0	4	8.0	4	13.5	4	13.5	4	9.0	4	9.0	4	7.5	5	11.5	0	5	11.5	4	14.0	0.40	0.90	0.41	0.41	0.43	0.43		0.33				68.5	65	77	89
30'-3"	11	12	9	8	4	9.0	4	7.5	4	13.0	4	13.0	4	9.0	4	8.5	4	7.0	5	11.5	0	5	11.5	4	14.0	0.40	0.90	0.41	0.41	0.44	0.43		0.33				68.5	66	78	90
31'-11"	11	13	9	8	4	9.0	4	7.5	4	14.0	4	14.0	4	8.5	4	7.5	4	7.0	5	11.5	0	5	11.5	4	14.0	0.40	0.89	0.41	0.41	0.43	0.43		0.33				68.5	67	79	91

DESIGN FILL	MEMBER THICKNESSES				SPAN (S) = 5 ft, HT (ft) = 7 or 8																																			
					TOP SLAB BARS								BOTTOM SLAB BARS						WALL BARS							COEFFICIENTS (see note)										"C" Multiplier	"K" Multiplier	
	TS	BS	TX	TI	A1	Bars	J3	Bars	H1	Bars	H2	Bars	A2	Bars	J4	Bars	H3	Bars	B1	Bars	B2 Bars			F	Bars	J4	H3		J3		H1		H2				S = 5 ft	HT = 7 ft	HT = 8 ft
(ft-in)	Thick	Thick.	Thick	Thick.	Size	c to c	Size	c to c	Size	c to c	Size	c to c	Size	c to c	Size	c to c	Size	c to c	Size	c to c	G1	Size	c to c	Size	c to c	C4	K3	C7	C1	K2	C5		C6				in	in	in
HS20																																								
0'-10"	10	8	8	8	4	6.5	4	11.5	4	22.0	4	22.0	4	11.5	4	7.0	5	9.0	5	11.5	12	5	11.5	4	14.0	0.63	0.92	0.54	0.51	0.29	0.88		0.48				68	97	109
2'-7"	8	8	8	8	4	11.0	4	11.0	4	23.5	4	23.5	4	11.5	4	11.0	4	6.5	5	11.5	12	5	11.5	4	14.0	0.59	0.94	0.50	0.51	0.27	0.88		0.38				68	95	107
4'-3"	8	8	8	8	4	11.5	4	11.5	4	23.5	4	23.5	4	11.5	4	9.5	4	9.0	5	11.5	12	5	11.5	4	14.0	0.56	0.94	0.45	0.60	0.27	0.48		0.34				68	95	107
5'-11"	8	8	8	8	4	11.5	4	11.5	4	23.5	4	23.5	4	11.5	4	9.0	4	9.5	5	11.5	12	5	11.5	4	14.0	0.54	0.94	0.43	0.57	0.27	0.48		0.34				68	95	107
7'-6"	8	8	8	8	4	11.5	4	11.0	4	23.5	4	23.5	4	11.5	4	8.0	4	9.5	5	11.5	0	5	11.5	4	14.0	0.53	0.94	0.42	0.55	0.27	0.46		0.33				68	95	107
HS20 MOD																																								
0'-9"	11	9	8	8	5	9.0	4	11.0	4	19.5	4	19.5	4	11.5	4	8.0	4	6.0	5	11.5	12	5	11.5	4	14.0	0.64	0.91	0.55	0.51	0.29	0.88		0.52				68	99	111
2'-7"	8	9	8	8	4	9.0	4	9.5	4	20.5	4	20.5	4	12.5	4	11.5	4	7.0	5	11.5	12	5	11.5	4	14.0	0.61	0.94	0.54	0.51	0.27	0.88		0.39				68	96	108
4'-3"	8	8	8	8	4	11.5	4	11.5	4	23.5	4	23.5	4	11.5	4	9.0	4	8.5	5	11.5	12	5	11.5	4	14.0	0.56	0.94	0.45	0.60	0.27	0.50		0.34				68	95	107
5'-11"	8	8	8	8	4	11.5	4	11.5	4	23.5	4	23.5	4	11.5	4	8.5	4	9.0	5	11.5	12	5	11.5	4	14.0	0.54	0.94	0.43	0.57	0.27	0.48		0.35				68	95	107
7'-6"	8	8	8	8	4	11.5	4	10.5	4	23.5	4	23.5	4	11.5	4	7.5	4	9.0	5	11.5	0	5	11.5	4	14.0	0.53	0.94	0.43	0.55	0.27	0.46		0.34				68	95	107
HS20 or HS20 MOD																																								
9'-2"	8	8	8	8	4	11.5	4	9.0	4	23.5	4	23.5	4	11.5	4	7.0	4	8.5	5	11.5	0	5	11.5	4	14.0	0.52	0.94	0.42	0.53	0.27	0.43		0.33				68	95	107
10'-10"	8	9	8	8	4	11.5	4	8.5	4	23.0	4	23.0	4	11.5	4	8.0	4	7.5	5	11.5	0	5	11.5	4	14.0	0.52	0.94	0.42	0.52	0.27	0.43		0.33				68	96	108
12'-5"	8	8	8	8	4	11.5	4	8.5	4	23.5	4	23.5	4	11.5	4	6.0	4	8.5	5	11.5	0	5	11.5	4	14.0	0.50	0.94	0.41	0.51	0.27	0.42		0.32				68	95	107
14'-1"	8	9	8	8	4	11.5	4	7.0	4	22.0	4	22.0	4	12.5	4	7.0	4	9.5	5	11.5	0	5	11.5	4	14.0	0.51	0.94	0.41	0.51	0.27	0.43		0.32				68	96	108
15'-9"	8	9	8	8	4	11.5	4	7.0	4	20.0	4	20.0	4	12.0	4	6.5	4	9.0	5	11.5	0	5	11.5	4	14.0	0.50	0.94	0.41	0.50	0.27	0.43		0.32				68	96	108
17'-5"	8	9	8	8	4	11.5	4	6.0	4	18.0	4	18.0	4	11.0	4	6.0	4	8.0	5	11.5	0	5	11.5	4	14.0	0.50	0.94	0.41	0.50	0.27	0.42		0.32				68	96	108
19'-0"	8	10	9	8	4	11.5	4	7.0	4	16.5	4	16.5	4	11.5	4	7.0	4	9.0	5	11.5	0	5	11.5	4	14.0	0.50	0.94	0.40	0.50	0.27	0.43		0.32				69	97	109
20'-8"	8	10	9	8	4	11.0	4	6.5	4	15.0	4	15.0	4	11.0	4	6.5	4	8.5	5	11.5	0	5	11.5	4	14.0	0.50	0.94	0.40	0.49	0.27	0.43		0.32				69	97	109
22'-3"	9	10	9	8	4	11.5	4	6.0	4	16.5	4	16.5	4	10.0	4	6.0	4	7.5	5	11.5	0	5	11.5	4	14.0	0.50	0.93	0.41	0.50	0.27	0.42		0.32				69	98	110
23'-10"	9	11	10	8	4	11.0	4	7.0	4	15.5	4	15.5	4	10.5	4	7.0	4	9.0	5	11.5	0	5	11.5	4	14.0	0.50	0.93	0.40	0.49	0.27	0.42		0.32				69	99	111
25'-6"	9	11	10	8	4	10.5	4	6.5	4	14.5	4	14.5	4	10.0	4	6.5	4	8.0	5	11.5	0	5	11.5	4	14.0	0.50	0.93	0.40	0.49	0.27	0.42		0.32				69	99	111
27'-1"	10	11	10	8	4	11.0	4	6.0	4	16.0	4	16.0	4	9.5	4	6.0	4	7.0	5	11.5	0	5	11.5	4	14.0	0.50	0.92	0.40	0.50	0.28	0.42		0.32				69	100	112
28'-8"	10	12	10	8	4	10.5	5	9.0	4	15.0	4	15.0	4	10.0	5	9.0	4	8.5	5	11.5	0	5	11.5	4	14.0	0.51	0.93	0.40	0.51	0.29	0.42		0.32				69	101	113
30'-4"	10	12	11	8	4	9.5	4	6.5	4	14.5	4	14.5	4	9.0	4	6.5	4	7.5	5	11.5	0	5	11.5	4	14.0	0.50	0.93	0.39	0.50	0.28	0.41		0.32				70	101	113
31'-11"	11	12	11	8	4	9.5	4	6.0	4	14.0	4	14.0	4	9.0	4	6.0	4	7.0	5	11.5	0	5	11.5	4	14.0	0.50	0.93	0.40	0.50	0.28	0.41		0.32				70	102	114

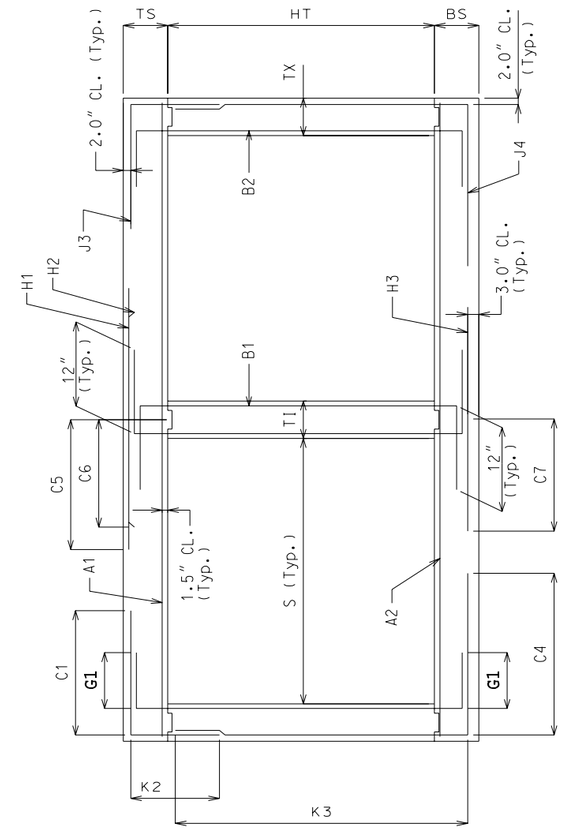

SECTION THRU BOX

NOTE: IF DESIGN FILL FALLS BETWEEN TABULATED FILLS, USE THE ADJACENT TABULATED FILL WHICH YIELDS THE GREATER MEMBER THICKNESS. IF THE MEMBER THICKNESSES ARE EQUAL, USE THE ADJACENT TABULATED FILL WHICH YIELDS THE GREATER AREA OF REINFORCEMENT.

SPECIAL DESIGNS ARE REQUIRED WHEN THE DESIGN FILL IS OUTSIDE THE RANGE OF TABULATED FILLS.

ALL DIMENSIONS ARE IN inch UNLESS OTHERWISE SPECIFIED.

COEFFICIENTS: DIMENSIONS MARKED WITH C# OR K# ARE THE PRODUCT OF THE COEFFICIENT AND ITS ASSOCIATED MULTIPLIER.

DESIGN FILL HEIGHT GIVEN IN THE TABLES IS THE HEIGHT FROM THE TOP OF THE EARTH FILL OR ROADWAY TO THE TOP OF THE TOP SLAB.

ALL CULVERTS MEET STRENGTH REQUIREMENTS FOR MILITARY 24 kips TANDEM AXLE LOADING.

MISSOURI HIGHWAY AND TRANSPORTATION COMMISSION

CONCRETE DOUBLE BOX CULVERT

MEMBER SIZES AND REINFORCEMENT

(HS20 & HS20 MOD. LOADING)

DATE:	EFFECTIVE: 04-01-2002	703.45B	2/13

Span (S) = 6 ft — HT (ft) = 4 or 5

Design Fill	(ft-in)	TS Thick	BS Thick.	TX Thick	TI Thick.	A1 Size	A1 Bars c to c	J3 Size	J3 Bars c to c	H1 Size	H1 Bars c to c	H2 Size	H2 Bars c to c	A2 Size	A2 Bars c to c	J4 Size	J4 Bars c to c	H3 Size	H3 Bars c to c	B1 Size	B1 Bars c to c	G1	B2 Size	B2 Bars c to c	F Size	F Bars c to c	J4 C4	J4 K3	H3 C7	J3 C1	J3 K2	H1 C5	H2 C6	"C" Multiplier S = 6 ft (in)	"K" Multiplier HT = 4 ft (in)	"K" Multiplier HT = 5 ft (in)
HS20	0'-10"	10	8	8	8	5	9.0	4	11.5	4	20.0	4	20.0	4	11.0	4	8.5	5	7.0	5	11.5	12	5	11.5	4	14.0	0.45	0.88	0.51	0.48	0.45	0.86	0.43	80	61	73
	2'-7"	8	9	8	8	4	9.0	4	11.5	4	17.5	4	17.5	4	11.0	4	11.5	5	7.5	5	11.5	12	5	11.5	4	14.0	0.37	0.91	0.48	0.47	0.44	0.62	0.32	80	60	72
	4'-3"	8	8	8	8	4	11.5	4	11.5	4	22.0	4	22.0	4	11.5	4	11.5	4	6.5	5	11.5	12	5	11.5	4	14.0	0.36	0.91	0.43	0.38	0.44	0.46	0.32	80	59	71
	5'-11"	8	8	8	8	4	11.5	4	11.5	4	20.0	4	20.0	4	11.0	4	11.5	4	7.0	5	11.5	12	5	11.5	4	14.0	0.35	0.91	0.41	0.35	0.44	0.44	0.30	80	59	71
	7'-6"	8	8	8	8	4	11.5	4	11.5	4	19.0	4	19.0	4	10.5	4	11.5	4	6.5	5	11.5	0	5	11.5	4	14.0	0.35	0.91	0.40	0.34	0.44	0.42	0.30	80	59	71
HS20 MOD	0'-8"	12	9	8	8	5	9.0	4	9.5	4	19.0	4	19.0	4	11.0	4	9.0	5	7.0	5	11.5	12	5	11.5	4	14.0	0.44	0.86	0.52	0.48	0.46	0.86	0.47	80	64	76
	2'-7"	8	9	8	8	4	7.0	4	9.5	4	14.5	4	14.5	4	10.5	4	11.5	5	7.5	5	11.5	12	5	11.5	4	14.0	0.37	0.91	0.50	0.48	0.43	0.66	0.32	80	60	72
	4'-3"	8	8	8	8	4	11.5	4	11.5	4	19.0	4	19.0	4	10.5	4	11.5	5	9.0	5	11.5	12	5	11.5	4	14.0	0.36	0.91	0.44	0.39	0.44	0.47	0.32	80	59	71
	5'-11"	8	8	8	8	4	11.5	4	11.5	4	18.5	4	18.5	4	10.5	4	11.5	4	6.0	5	11.5	12	5	11.5	4	14.0	0.35	0.91	0.41	0.35	0.44	0.45	0.31	80	59	71
	7'-6"	8	9	8	8	4	11.5	4	11.5	4	17.5	4	17.5	4	11.5	4	11.5	4	7.5	5	11.5	0	5	11.5	4	14.0	0.34	0.91	0.40	0.34	0.43	0.43	0.30	80	60	72
HS20 MOD or HS20	9'-2"	8	9	8	8	4	11.5	4	11.5	4	16.5	4	16.5	4	11.0	4	11.5	4	7.0	5	11.5	0	5	11.5	4	14.0	0.33	0.91	0.40	0.33	0.43	0.41	0.29	80	60	72
	10'-10"	8	9	8	8	4	11.0	4	11.5	4	15.0	4	15.0	4	9.5	4	11.5	4	6.5	5	11.5	0	5	11.5	4	14.0	0.33	0.91	0.39	0.33	0.43	0.41	0.29	80	60	72
	12'-5"	8	10	8	8	4	10.5	4	11.5	4	13.5	4	13.5	4	9.0	4	11.5	4	6.0	5	11.5	0	5	11.5	4	14.0	0.32	0.91	0.39	0.33	0.43	0.41	0.29	80	61	73
	14'-1"	8	9	8	8	4	10.5	4	11.5	4	14.0	4	14.0	4	9.0	4	11.5	4	6.0	5	11.5	0	5	11.5	4	14.0	0.32	0.91	0.39	0.33	0.43	0.40	0.29	80	60	72
	15'-9"	8	10	8	8	4	9.5	4	11.0	4	12.5	4	12.5	4	9.0	4	11.5	4	7.0	5	11.5	0	5	11.5	4	14.0	0.31	0.91	0.38	0.33	0.42	0.40	0.29	80	61	73
	17'-4"	9	10	8	8	4	9.5	4	11.5	4	13.0	4	13.0	4	9.0	4	11.5	4	6.0	5	11.5	0	5	11.5	4	14.0	0.31	0.90	0.39	0.32	0.43	0.40	0.29	80	62	74
	18'-11"	9	11	8	8	4	9.0	4	10.5	4	12.0	4	12.0	4	9.0	4	11.5	4	7.0	5	11.5	0	5	11.5	4	14.0	0.31	0.90	0.38	0.32	0.42	0.40	0.29	80	63	75
	20'-6"	10	11	8	8	4	9.0	4	10.5	4	12.5	4	12.5	4	8.5	4	11.0	5	9.0	5	11.5	0	5	11.5	4	14.0	0.31	0.89	0.40	0.31	0.43	0.40	0.29	80	64	76
	22'-2"	10	12	8	8	4	8.5	4	9.5	5	18.0	5	18.0	4	8.5	4	11.5	4	6.5	5	11.5	0	5	11.5	4	14.0	0.30	0.89	0.38	0.31	0.43	0.41	0.30	80	65	77
	23'-8"	11	12	8	8	4	8.0	4	9.0	5	16.5	5	16.5	4	8.0	4	10.5	5	9.0	5	11.5	0	5	11.5	4	14.0	0.30	0.89	0.40	0.31	0.44	0.41	0.30	80	66	78
	25'-4"	11	13	8	8	4	8.5	4	9.0	5	18.0	5	18.0	4	8.0	4	10.5	4	6.0	5	11.5	0	5	11.5	4	14.0	0.30	0.88	0.38	0.31	0.43	0.41	0.30	80	67	79
	27'-0"	11	13	8	8	4	7.5	4	9.0	5	16.5	5	16.5	4	7.5	4	10.5	5	9.0	5	11.5	0	5	11.5	4	14.0	0.30	0.88	0.39	0.31	0.43	0.41	0.30	80	67	79
	28'-6"	12	13	8	8	4	8.0	4	9.0	5	18.0	5	18.0	4	7.0	4	9.5	5	8.5	5	11.5	0	5	11.5	4	14.0	0.30	0.87	0.40	0.30	0.44	0.41	0.30	80	68	80
	30'-2"	12	14	8	8	4	7.5	4	8.5	5	16.5	5	16.5	4	7.5	4	9.0	5	9.0	5	11.5	0	5	11.5	4	14.0	0.30	0.87	0.39	0.30	0.43	0.41	0.30	80	69	81
	31'-9"	13	14	8	8	4	7.5	4	9.0	5	18.0	5	18.0	4	7.0	4	9.0	5	8.5	5	11.5	0	5	11.5	4	14.0	0.30	0.86	0.40	0.30	0.44	0.41	0.30	80	70	82

SPAN (S) = 6 ft — HT (ft) = 6 or 7

Design Fill	(ft-in)	TS Thick	BS Thick.	TX Thick	TI Thick.	A1 Size	A1 Bars c to c	J3 Size	J3 Bars c to c	H1 Size	H1 Bars c to c	H2 Size	H2 Bars c to c	A2 Size	A2 Bars c to c	J4 Size	J4 Bars c to c	H3 Size	H3 Bars c to c	B1 Size	B1 Bars c to c	G1	B2 Size	B2 Bars c to c	F Size	F Bars c to c	J4 C4	J4 K3	H3 C7	J3 C1	J3 K2	H1 C5	H2 C6	"C" Multiplier S = 6 ft (in)	"K" Multiplier HT = 6 ft (in)	"K" Multiplier HT = 7 ft (in)
HS20	0'-10"	10	9	8	8	5	9.0	4	11.0	4	19.5	4	19.5	4	10.5	4	7.5	5	7.0	5	11.5	12	5	11.5	4	14.0	0.49	0.91	0.52	0.48	0.33	0.86	0.45	80	86	98
	2'-7"	8	9	8	8	4	8.5	4	10.5	4	17.5	4	17.5	4	11.5	4	11.5	5	9.0	5	11.5	12	5	11.5	4	14.0	0.45	0.93	0.49	0.52	0.31	0.86	0.33	80	84	96
	4'-3"	8	8	8	8	4	11.5	4	11.5	4	21.0	4	21.0	4	11.0	4	10.5	4	6.5	5	11.5	12	5	11.5	4	14.0	0.42	0.93	0.43	0.45	0.31	0.47	0.32	80	83	95
	5'-11"	8	8	8	8	4	11.5	4	11.5	4	20.0	4	20.0	4	10.5	4	10.5	4	6.5	5	11.5	12	5	11.5	4	14.0	0.40	0.93	0.41	0.41	0.31	0.44	0.31	80	83	95
	7'-6"	8	8	8	8	4	11.5	4	11.5	4	18.5	4	18.5	4	10.0	4	9.0	4	6.0	5	11.5	0	5	11.5	4	14.0	0.39	0.93	0.40	0.40	0.31	0.43	0.30	80	83	95
HS20 MOD	0'-8"	12	9	8	8	5	9.0	4	9.5	4	16.5	4	16.5	4	10.5	4	8.0	5	7.0	5	11.5	12	5	11.5	4	14.0	0.48	0.89	0.51	0.48	0.34	0.86	0.47	80	88	100
	2'-7"	8	9	8	8	4	7.0	4	9.0	4	14.5	4	14.5	4	10.0	4	11.5	5	7.0	5	11.5	12	5	11.5	4	14.0	0.45	0.93	0.51	0.57	0.31	0.86	0.33	80	84	96
	4'-3"	8	9	8	8	4	11.5	4	11.5	4	18.5	4	18.5	4	10.5	4	11.5	5	9.0	5	11.5	12	5	11.5	4	14.0	0.42	0.93	0.44	0.46	0.31	0.48	0.32	80	84	96
	5'-11"	8	9	8	8	4	11.5	4	11.5	4	18.0	4	18.0	4	10.0	4	11.5	4	6.0	5	11.5	12	5	11.5	4	14.0	0.41	0.93	0.41	0.41	0.31	0.45	0.31	80	84	96
	7'-6"	8	9	8	8	4	11.5	4	11.5	4	17.5	4	17.5	4	11.0	4	11.0	4	7.5	5	11.5	0	5	11.5	4	14.0	0.40	0.93	0.40	0.40	0.31	0.44	0.30	80	84	96
HS20 MOD or HS20	9'-2"	8	9	8	8	4	11.5	4	10.5	4	16.5	4	16.5	4	10.5	4	10.5	4	7.0	5	11.5	0	5	11.5	4	14.0	0.39	0.93	0.39	0.39	0.31	0.41	0.29	80	84	96
	10'-10"	8	9	8	8	4	11.0	4	9.0	4	15.0	4	15.0	4	9.5	4	9.0	4	6.5	5	11.5	0	5	11.5	4	14.0	0.38	0.93	0.39	0.38	0.31	0.41	0.29	80	84	96
	12'-5"	8	10	8	8	4	10.5	4	9.0	4	13.5	4	13.5	4	10.0	4	9.0	4	7.5	5	11.5	0	5	11.5	4	14.0	0.38	0.93	0.38	0.38	0.30	0.41	0.29	80	85	97
	14'-1"	8	10	8	8	4	11.0	4	8.5	4	14.0	4	14.0	4	10.5	4	9.0	4	7.5	5	11.5	0	5	11.5	4	14.0	0.37	0.93	0.38	0.38	0.30	0.40	0.29	80	85	97
	15'-9"	8	10	8	8	4	9.5	4	7.5	4	12.5	4	12.5	4	9.0	4	8.0	4	7.0	5	11.5	0	5	11.5	4	14.0	0.37	0.93	0.38	0.38	0.30	0.40	0.29	80	85	97
	17'-4"	9	10	8	8	4	10.0	4	7.0	4	13.5	4	13.5	4	9.0	4	7.0	4	6.0	5	11.5	0	5	11.5	4	14.0	0.37	0.92	0.39	0.37	0.31	0.40	0.29	80	86	98
	18'-11"	9	11	8	8	4	9.0	4	7.0	4	12.0	4	12.0	4	9.0	4	7.0	4	7.0	5	11.5	0	5	11.5	4	14.0	0.37	0.92	0.38	0.37	0.31	0.40	0.29	80	87	99
	20'-6"	10	11	8	8	4	9.0	4	6.5	4	12.5	4	12.5	4	8.5	4	6.5	4	6.0	5	11.5	0	5	11.5	4	14.0	0.37	0.91	0.39	0.37	0.32	0.40	0.29	80	88	100
	22'-2"	10	12	8	8	4	9.0	4	6.0	4	12.0	4	12.0	4	8.5	4	6.5	4	6.5	5	11.5	0	5	11.5	4	14.0	0.37	0.92	0.38	0.37	0.31	0.40	0.29	80	89	101
	23'-9"	10	12	9	8	4	8.0	4	6.5	5	17.0	5	17.0	4	8.0	4	7.0	4	6.0	5	11.5	0	5	11.5	4	14.0	0.37	0.92	0.38	0.38	0.31	0.41	0.30	81	89	101
	25'-4"	11	13	9	8	4	8.5	4	6.5	4	12.0	4	12.0	4	8.5	4	6.5	4	6.5	5	11.5	0	5	11.5	4	14.0	0.37	0.91	0.38	0.38	0.32	0.40	0.29	81	91	103
	27'-0"	11	13	9	8	4	8.0	4	6.0	5	17.0	5	17.0	4	7.5	4	6.5	4	6.0	5	11.5	0	5	11.5	4	14.0	0.37	0.91	0.38	0.38	0.32	0.41	0.30	81	91	103
	28'-6"	12	13	9	8	4	8.5	4	6.0	4	12.0	4	12.0	4	7.5	4	6.0	5	9.0	5	11.5	0	5	11.5	4	14.0	0.37	0.90	0.39	0.37	0.32	0.40	0.29	81	92	104
	30'-2"	12	14	10	8	4	8.0	4	6.5	5	17.5	5	17.5	4	7.5	4	7.0	4	6.0	5	11.5	0	5	11.5	4	14.0	0.38	0.90	0.38	0.38	0.32	0.40	0.30	81	93	105
	31'-10"	12	14	10	8	4	7.5	4	6.0	5	16.5	5	16.5	4	7.0	4	6.5	5	9.0	5	11.5	0	5	11.5	4	14.0	0.37	0.90	0.39	0.38	0.32	0.40	0.30	81	93	105

SPAN (S) = 6 ft — HT (ft) = 8 or 9

Design Fill	(ft-in)	TS Thick	BS Thick.	TX Thick	TI Thick.	A1 Size	A1 Bars c to c	J3 Size	J3 Bars c to c	H1 Size	H1 Bars c to c	H2 Size	H2 Bars c to c	A2 Size	A2 Bars c to c	J4 Size	J4 Bars c to c	H3 Size	H3 Bars c to c	B1 Size	B1 Bars c to c	G1	B2 Size	B2 Bars c to c	F Size	F Bars c to c	J4 C4	J4 K3	H3 C7	J3 C1	J3 K2	H1 C5	H2 C6	"C" Multiplier S = 6 ft (in)	"K" Multiplier HT = 8 ft (in)	"K" Multiplier HT = 9 ft (in)
HS20	0'-10"	10	9	9	9	5	9.0	4	9.5	4	19.0	4	19.0	4	11.0	4	7.0	5	8.0	5	11.5	12	5	11.5	4	14.0	0.58	0.93	0.52	0.49	0.25	0.86	0.45	81	110	122
	2'-7"	8	9	9	9	4	8.5	4	9.0	4	17.0	4	17.0	4	11.0	4	9.0	5	9.0	5	11.5	12	5	11.5	4	14.0	0.55	0.95	0.50	0.49	0.24	0.86	0.33	81	108	120
	4'-3"	8	8	9	9	4	11.5	4	11.0	4	21.0	4	21.0	4	10.5	4	7.0	4	6.0	5	11.5	12	5	11.5	4	14.0	0.50	0.95	0.43	0.57	0.24	0.47	0.32	81	107	119
	5'-11"	8	8	9	9	4	11.5	4	10.5	4	20.0	4	20.0	4	10.0	4	6.5	4	6.5	5	11.5	12	5	11.5	4	14.0	0.48	0.95	0.40	0.51	0.24	0.45	0.31	81	107	119
	7'-6"	8	9	9	9	4	11.5	4	9.0	4	18.5	4	18.5	4	11.0	4	7.0	4	8.0	5	11.5	0	5	11.5	4	14.0	0.48	0.95	0.39	0.49	0.24	0.43	0.30	81	108	120
HS20 MOD	0'-8"	12	10	9	9	5	8.5	4	9.5	4	16.5	4	16.5	4	10.0	4	7.0	5	7.0	5	11.5	12	5	11.5	4	14.0	0.59	0.92	0.52	0.49	0.27	0.86	0.48	81	113	125
	2'-7"	8	9	9	9	4	7.0	4	8.0	4	14.5	4	14.5	4	9.0	4	8.0	5	7.0	5	11.5	12	5	11.5	4	14.0	0.55	0.95	0.51	0.49	0.24	0.86	0.34	81	108	120
	4'-3"	8	9	9	9	4	11.5	4	9.5	4	18.5	4	18.5	4	11.0	4	8.0	4	7.0	5	11.5	12	5	11.5	4	14.0	0.51	0.95	0.44	0.57	0.24	0.49	0.32	81	108	120
	5'-11"	8	9	9	9	4	11.5	4	9.5	4	17.5	4	17.5	4	11.0	4	7.5	4	7.5	5	11.5	12	5	11.5	4	14.0	0.49	0.95	0.41	0.51	0.24	0.46	0.31	81	108	120
	7'-6"	8	9	9	9	4	11.5	4	9.0	4	17.5	4	17.5	4	10.5	4	7.0	4	7.0	5	11.5	0	5	11.5	4	14.0	0.48	0.95	0.40	0.49	0.24	0.44	0.30	81	108	120
HS20 MOD or HS20	9'-2"	8	9	9	9	4	11.5	4	8.5	4	16.5	4	16.5	4	10.0	4	7.0	4	7.0	5	11.5	0	5	11.5	4	14.0	0.47	0.95	0.39	0.47	0.24	0.41	0.29	81	108	120
	10'-10"	8	9	9	9	4	11.0	4	7.5	4	15.0	4	15.0	4	9.0	4	6.0	4	6.5	5	11.5	0	5	11.5	4	14.0	0.46	0.95	0.39	0.47	0.24	0.41	0.29	81	108	120
	12'-5"	8	10	9	9	4	10.5	4	7.0	4	14.0	4	14.0	4	10.0	4	7.0	4	7.5	5	11.5	0	5	11.5	4	14.0	0.47	0.95	0.38	0.46	0.24	0.41	0.29	81	109	121
	14'-1"	8	10	9	9	4	11.0	4	6.5	4	14.5	4	14.5	4	10.5	4	6.5	4	8.0	5	11.5	0	5	11.5	4	14.0	0.46	0.95	0.37	0.46	0.24	0.40	0.29	81	109	121
	15'-9"	8	10	9	9	4	10.0	4	6.0	4	12.5	4	12.5	4	9.0	4	6.0	4	7.0	5	11.5	0	5	11.5	4	14.0	0.46	0.95	0.37	0.45	0.24	0.40	0.29	81	109	121
	17'-4"	9	10	9	9	4	9.0	5	9.0	4	12.5	4	12.5	4	8.5	5	8.5	4	6.0	5	11.5	0	5	11.5	4	14.0	0.46	0.95	0.38	0.45	0.28	0.40	0.29	81	110	122
	18'-11"	9	11	10	9	4	9.5	4	6.0	4	12.5	4	12.5	4	9.0	4	6.0	4	7.0	5	11.5	0	5	11.5	4	14.0	0.45	0.94	0.38	0.45	0.24	0.40	0.29	82	111	123
	20'-7"	9	11	10	9	4	9.0	5	9.0	5	18.0	5	18.0	4	8.5	5	9.0	4	6.5	5	11.5	0	5	11.5	4	14.0	0.46	0.94	0.38	0.46	0.26	0.40	0.30	82	111	123
	22'-2"	10	12	10	9	4	9.0	5	8.5	4	12.5	4	12.5	4	9.0	5	8.5	4	7.0	5	11.5	0	5	11.5	4	14.0	0.46	0.93	0.37	0.46	0.29	0.40	0.29	82	113	125
	23'-9"	10	12	10	9	4	9.0	5	7.5	5	18.5	5	18.5	4	8.5	5	7.5	4	6.0	5	11.5	0	5	11.0	4	14.0	0.46	0.93	0.37	0.46	0.26	0.40	0.29	82	113	125
	25'-4"	11	13	11	9	4	9.0	5	9.0	4	12.5	4	12.5	4	8.5	5	8.5	4	6.5	5	11.5	0	5	11.5	4	14.0	0.46	0.93	0.37	0.46	0.26	0.39	0.29	82	115	127
	27'-0"	11	13	11	9	4	9.0	5	8.5	5	18.5	5	18.5	4	8.0	5	8.0	4	6.0	5	11.5	0	5	11.5	4	14.0	0.46	0.93	0.37	0.46	0.29	0.40	0.29	82	115	127
	28'-7"	11	13	11	9	4	8.0	5	7.5	5	17.0	5	17.0	4	7.5	5	7.5	4	6.0	5	11.5	0	5	11.0	4	14.0	0.46	0.93	0.37	0.46	0.29	0.40	0.30	82	115	127
	30'-2"	12	14	12	9	4	8.5	5	8.5	4	12.0	4	12.0	4	8.0	5	8.5	4	6.0	5	11.5	0	5	11.5	4	14.0	0.46	0.92	0.37	0.46	0.27	0.39	0.29	83	117	129
	31'-10"	12	14	12	9	4	8.0	5	8.0	5	17.5	5	17.5	4	7.5	5	8.0	4	6.0	5	11.5	0	5	11.0	4	14.0	0.46	0.92	0.37	0.46	0.29	0.40	0.29	83	117	129

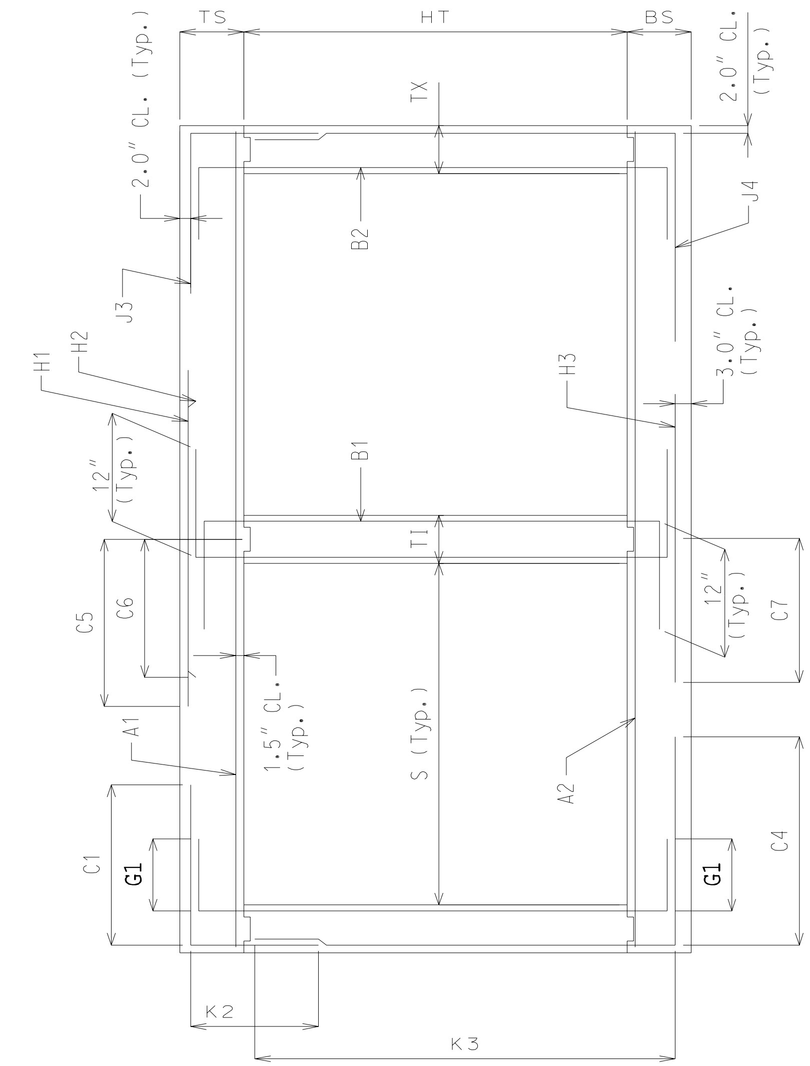

SECTION THRU BOX

NOTE: IF DESIGN FILL FALLS BETWEEN TABULATED FILLS, USE THE ADJACENT TABULATED FILL WHICH YIELDS THE GREATER MEMBER THICKNESS. IF THE MEMBER THICKNESSES ARE EQUAL, USE THE ADJACENT TABULATED FILL WHICH YIELDS THE GREATER AREA OF REINFORCEMENT.

SPECIAL DESIGNS ARE REQUIRED WHEN THE DESIGN FILL IS OUTSIDE THE RANGE OF TABULATED FILLS.

ALL DIMENSIONS ARE IN inch UNLESS OTHERWISE SPECIFIED.

COEFFICIENTS: DIMENSIONS MARKED WITH C# OR K# ARE THE PRODUCT OF THE COEFFICIENT AND ITS ASSOCIATED MULTIPLIER.

DESIGN FILL HEIGHT GIVEN IN THE TABLES IS THE HEIGHT FROM THE TOP OF THE EARTH FILL OR ROADWAY TO THE TOP OF THE TOP SLAB.

ALL CULVERTS MEET STRENGTH REQUIREMENTS FOR MILITARY 24 kips TANDEM AXLE LOADING.

MISSOURI HIGHWAY AND TRANSPORTATION COMMISSION

CONCRETE DOUBLE BOX CULVERT

MEMBER SIZES AND REINFORCEMENT

(HS20 & HS20 MOD. LOADING)

DATE:

EFFECTIVE: 04-01-2002

703.45B

Span (S) = 7 ft — HT (ft) = 4 or 5 or 6

DESIGN FILL / MEMBER THICKNESSES / TOP SLAB BARS / BOTTOM SLAB BARS / WALL BARS / COEFFICIENTS (see note) / "C" Multiplier / "K" Multiplier

Loading	Design Fill (ft-in)	TS Thick	BS Thick.	TX Thick	TI Thick.	A1 Size	A1 Bars c to c	J3 Size	J3 Bars c to c	H1 Size	H1 Bars c to c	H2 Size	H2 Bars c to c	A2 Size	A2 Bars c to c	J4 Size	J4 Bars c to c	H3 Size	H3 Bars c to c	B1 Size	B1 Bars c to c	B2 Bars G1	B2 Bars Size	B2 Bars c to c	F Size	F Bars c to c	J4 C4	J4 K3	H3 C7	J3 C1	J3 K2	H1 C5	H2 C6	"C" Multiplier S = 7 ft (in)	"K" Multiplier HT = 4 ft (in)	"K" Multiplier HT = 5 ft (in)	"K" Multiplier HT = 6 ft (in)
HS20	0'-10"	10	11	8	8	5	8.0	4	9.5	5	16.0	5	16.0	4	7.0	5	7.0	5	7.5	5	11.5	12	5	7.5	4	14.0	0.43	0.90	0.52	0.46	0.44	0.84	0.40	92	64	76	88
	2'-7"	8	9	8	8	4	7.0	4	8.5	5	18.0	5	18.0	4	9.5	4	9.0	5	7.0	5	11.5	12	5	11.5	4	14.0	0.35	0.92	0.47	0.45	0.43	0.60	0.31	92	60	72	84
	4'-3"	8	8	8	8	4	10.5	4	11.5	4	14.5	4	14.5	4	9.0	4	9.5	5	7.0	5	11.5	12	5	11.5	4	14.0	0.34	0.92	0.42	0.37	0.44	0.45	0.29	92	59	71	83
	5'-11"	8	9	8	8	4	11.0	4	11.5	4	14.5	4	14.5	4	9.5	4	11.5	4	6.0	5	11.5	12	5	11.5	4	14.0	0.33	0.92	0.39	0.34	0.43	0.43	0.28	92	60	72	84
	7'-6"	8	9	8	8	4	10.5	4	11.5	4	13.0	4	13.0	4	9.0	4	11.5	5	9.0	5	11.5	0	5	11.5	4	14.0	0.32	0.92	0.39	0.32	0.43	0.41	0.28	92	60	72	84
HS20 MOD	0'-8"	12	12	8	8	5	8.0	4	9.5	5	15.0	5	15.0	4	6.5	5	7.0	5	7.5	5	11.5	12	5	7.0	4	14.0	0.42	0.88	0.53	0.46	0.45	0.84	0.45	92	67	79	91
	2'-6"	9	10	8	8	4	6.0	4	7.5	5	17.5	5	17.5	4	9.0	4	8.5	5	6.5	5	11.5	12	5	11.5	4	14.0	0.35	0.91	0.49	0.49	0.43	0.71	0.32	92	62	74	86
	4'-3"	8	9	8	8	4	9.0	4	10.5	4	12.5	4	12.5	4	9.5	4	10.5	5	8.0	5	11.5	12	5	11.5	4	14.0	0.34	0.92	0.43	0.38	0.43	0.47	0.30	92	60	72	84
	5'-11"	8	9	8	8	4	9.5	4	11.0	4	12.5	4	12.5	4	9.0	4	11.0	5	8.5	5	11.5	12	5	11.5	4	14.0	0.33	0.92	0.40	0.34	0.43	0.43	0.29	92	60	72	84
	7'-6"	8	9	8	8	4	9.5	4	11.0	4	12.0	4	12.0	4	8.5	4	11.0	5	8.5	5	11.5	0	5	11.5	4	14.0	0.32	0.92	0.39	0.32	0.43	0.42	0.28	92	60	72	84
HS20 or HS20 MOD	9'-2"	8	10	8	8	4	9.0	4	9.5	5	17.5	5	17.5	4	8.0	4	11.5	5	8.0	5	11.5	0	5	11.5	4	14.0	0.31	0.92	0.38	0.32	0.43	0.40	0.28	92	61	73	85
	10'-10"	8	10	8	8	4	8.0	4	9.0	5	16.0	5	16.0	4	8.0	4	10.5	5	9.0	5	11.5	0	5	11.5	4	14.0	0.30	0.92	0.37	0.31	0.42	0.40	0.28	92	61	73	85
	12'-4"	9	10	8	8	4	8.5	4	9.0	5	17.5	5	17.5	4	7.5	4	9.5	5	7.5	5	11.5	0	5	11.5	4	14.0	0.30	0.91	0.38	0.30	0.43	0.40	0.28	92	62	74	86
	14'-0"	9	11	8	8	4	8.0	4	8.5	5	16.0	5	16.0	4	7.5	4	9.5	5	9.0	5	11.5	0	5	11.5	4	14.0	0.29	0.91	0.37	0.30	0.42	0.40	0.28	92	63	75	87
	15'-8"	9	11	8	8	4	8.0	4	8.5	5	15.5	5	15.5	4	7.5	4	9.0	5	9.0	5	11.5	0	5	11.5	4	14.0	0.29	0.91	0.37	0.30	0.42	0.39	0.28	92	63	75	87
	17'-3"	10	12	8	8	4	8.0	4	8.5	5	16.5	5	16.5	4	7.0	4	9.0	5	7.5	5	11.5	0	5	11.5	4	14.0	0.29	0.90	0.38	0.30	0.43	0.39	0.28	92	65	77	89
	18'-10"	10	12	8	8	4	7.5	4	7.5	5	14.5	5	14.5	4	7.0	4	9.0	5	8.5	5	11.5	0	5	11.5	4	14.0	0.29	0.90	0.37	0.29	0.43	0.39	0.28	92	65	77	89
	20'-5"	11	13	8	8	4	7.5	4	7.5	5	15.5	5	15.5	4	7.5	4	9.0	5	8.5	5	11.5	0	5	11.5	4	14.0	0.28	0.90	0.37	0.29	0.43	0.39	0.28	92	67	79	91
	22'-1"	11	13	8	8	4	7.0	4	7.0	5	14.5	5	14.5	4	7.0	4	8.0	5	8.0	5	11.5	0	5	11.5	4	14.0	0.28	0.90	0.37	0.29	0.43	0.39	0.28	92	67	79	91
	23'-7"	12	14	8	8	4	7.0	4	7.0	5	15.0	5	15.0	4	7.0	4	8.0	5	8.0	5	11.5	0	5	11.5	4	14.0	0.28	0.89	0.37	0.29	0.43	0.39	0.28	92	69	81	93
	25'-3"	12	14	8	8	4	7.0	4	6.5	5	14.0	5	14.0	4	6.5	4	7.5	5	7.5	5	11.5	0	5	11.5	4	14.0	0.28	0.89	0.37	0.29	0.43	0.39	0.28	92	69	81	93
	26'-10"	13	15	8	8	4	7.0	4	6.5	5	14.5	5	14.5	4	7.0	4	7.5	5	7.5	5	11.5	0	5	11.5	4	14.0	0.28	0.88	0.38	0.29	0.43	0.39	0.28	92	71	83	95
	28'-5"	13	15	8	8	4	6.5	4	6.5	5	13.5	5	13.5	4	6.5	4	7.0	5	7.0	5	11.5	0	5	11.5	4	14.0	0.28	0.88	0.38	0.28	0.43	0.39	0.28	92	71	83	95
	30'-0"	14	16	9	8	4	6.5	4	7.0	5	14.5	5	14.5	4	6.0	4	7.5	5	7.0	5	11.5	0	5	11.5	4	14.0	0.29	0.87	0.38	0.29	0.44	0.39	0.28	93	73	85	97
	31'-8"	14	16	9	8	4	6.5	4	7.0	5	13.5	5	13.5	4	6.0	4	7.5	5	7.0	5	11.5	0	5	11.5	4	14.0	0.28	0.87	0.38	0.29	0.44	0.39	0.28	93	73	85	97

SPAN (S) = 7 ft — HT (ft) = 7 or 8

Loading	Design Fill (ft-in)	TS Thick	BS Thick.	TX Thick	TI Thick.	A1 Size	A1 Bars c to c	J3 Size	J3 Bars c to c	H1 Size	H1 Bars c to c	H2 Size	H2 Bars c to c	A2 Size	A2 Bars c to c	J4 Size	J4 Bars c to c	H3 Size	H3 Bars c to c	B1 Size	B1 Bars c to c	B2 Bars G1	B2 Bars Size	B2 Bars c to c	F Size	F Bars c to c	J4 C4	J4 K3	H3 C7	J3 C1	J3 K2	H1 C5	H2 C6	"C" Multiplier S = 7 ft (in)	"K" Multiplier HT = 7 ft (in)	"K" Multiplier HT = 8 ft (in)
HS20	0'-10"	10	10	8	8	5	8.0	4	8.5	5	15.0	5	15.0	4	6.5	5	6.0	5	7.0	5	11.5	12	5	7.5	4	14.0	0.49	0.92	0.51	0.46	0.28	0.84	0.42	92	99	111
	2'-7"	8	9	8	8	4	6.5	4	7.0	5	17.5	5	17.5	4	9.0	4	7.0	5	6.5	5	11.5	12	5	11.5	4	14.0	0.43	0.94	0.47	0.50	0.27	0.84	0.31	92	96	108
	4'-3"	8	9	8	8	4	10.5	4	9.0	4	14.5	4	14.5	4	10.0	4	9.0	5	9.0	5	11.5	12	5	11.5	4	14.0	0.40	0.94	0.42	0.44	0.27	0.47	0.30	92	96	108
	5'-11"	8	9	8	8	4	10.5	4	9.0	4	14.0	4	14.0	4	9.0	4	9.0	5	9.0	5	11.5	12	5	11.5	4	14.0	0.39	0.94	0.40	0.40	0.27	0.43	0.29	92	96	108
	7'-6"	8	9	8	8	4	10.0	4	8.5	4	13.0	4	13.0	4	8.5	4	8.0	5	9.0	5	11.5	0	5	11.5	4	14.0	0.37	0.94	0.38	0.38	0.27	0.41	0.28	92	96	108
HS20 MOD	0'-8"	12	11	8	8	5	7.5	4	8.5	5	13.5	5	13.5	4	6.0	5	6.0	5	7.0	5	11.5	12	5	7.5	4	14.0	0.50	0.91	0.52	0.46	0.29	0.84	0.46	92	102	114
	2'-6"	9	10	8	8	4	6.0	4	7.0	5	17.0	5	17.0	4	9.0	4	7.0	5	6.0	5	11.5	12	5	11.5	4	14.0	0.44	0.93	0.49	0.46	0.27	0.84	0.32	92	98	110
	4'-3"	8	9	8	8	4	9.0	4	9.0	4	12.5	4	12.5	4	9.0	4	8.0	5	7.5	5	11.5	12	5	11.5	4	14.0	0.40	0.94	0.43	0.44	0.27	0.49	0.30	92	96	108
	5'-11"	8	9	8	8	4	9.5	4	9.0	4	12.5	4	12.5	4	8.5	4	8.0	5	8.5	5	11.5	12	5	11.5	4	14.0	0.39	0.94	0.40	0.40	0.27	0.44	0.29	92	96	108
	7'-6"	8	9	8	8	4	9.0	4	8.0	4	12.5	4	12.5	4	8.0	4	7.5	5	8.0	5	11.5	0	5	11.5	4	14.0	0.37	0.94	0.39	0.38	0.27	0.42	0.28	92	96	108
HS20 or HS20 MOD	9'-2"	8	10	8	8	4	9.0	4	7.0	5	17.5	5	17.5	4	8.5	4	8.0	4	6.0	5	11.5	0	5	11.5	4	14.0	0.37	0.94	0.37	0.37	0.27	0.40	0.28	92	97	109
	10'-10"	8	10	8	8	4	8.0	4	7.0	5	16.0	5	16.0	4	8.0	4	7.0	5	9.0	5	11.5	0	5	11.5	4	14.0	0.36	0.94	0.37	0.36	0.27	0.40	0.27	92	97	109
	12'-4"	9	11	8	8	4	9.0	4	6.5	5	17.0	5	17.0	4	8.5	4	7.0	4	6.0	5	11.5	0	5	11.5	4	14.0	0.35	0.93	0.37	0.36	0.27	0.40	0.28	92	99	111
	14'-0"	9	11	8	8	4	8.0	4	6.0	5	16.0	5	16.0	4	7.5	4	6.0	5	9.0	5	11.5	0	5	11.5	4	14.0	0.35	0.93	0.37	0.35	0.27	0.40	0.28	92	99	111
	15'-8"	9	11	8	8	4	8.0	5	9.0	5	16.0	5	16.0	4	7.5	5	9.0	5	9.0	5	11.5	0	5	11.5	4	14.0	0.35	0.93	0.37	0.36	0.28	0.39	0.28	92	99	111
	17'-3"	10	12	8	8	4	8.5	5	8.5	5	16.5	5	16.5	4	8.0	5	8.5	5	9.0	5	11.5	0	5	11.5	4	14.0	0.35	0.93	0.37	0.36	0.29	0.39	0.28	92	101	113
	18'-10"	10	12	9	8	4	7.5	4	6.0	5	15.0	5	15.0	4	7.0	4	6.0	5	8.5	5	11.5	0	5	11.5	4	14.0	0.35	0.93	0.37	0.35	0.28	0.39	0.28	93	101	113
	20'-5"	11	13	9	8	4	8.0	5	9.0	5	16.0	5	16.0	4	7.5	4	6.0	5	9.0	5	11.5	0	5	11.5	4	14.0	0.35	0.92	0.37	0.36	0.29	0.39	0.28	93	103	115
	22'-1"	11	13	9	8	4	7.0	5	8.5	5	14.5	5	14.5	4	7.0	5	8.5	5	8.0	5	11.5	0	5	11.5	4	14.0	0.35	0.92	0.37	0.36	0.32	0.39	0.27	93	103	115
	23'-7"	12	14	10	8	4	7.5	4	6.0	5	15.5	5	15.5	4	7.0	4	6.0	5	8.5	5	11.5	0	5	11.5	4	14.0	0.35	0.91	0.37	0.36	0.28	0.39	0.28	93	105	117
	25'-3"	12	14	10	8	4	7.0	5	9.0	5	14.5	5	14.5	4	7.0	5	9.0	5	8.0	5	11.5	0	5	11.5	4	14.0	0.36	0.91	0.37	0.36	0.29	0.39	0.27	93	105	117
	26'-10"	13	15	10	8	4	7.0	5	8.5	5	15.0	5	15.0	4	6.5	5	8.5	5	7.0	5	11.5	0	5	11.5	4	14.0	0.36	0.90	0.37	0.36	0.30	0.39	0.27	93	107	119
	28'-5"	13	15	10	8	4	7.0	5	7.5	5	14.5	5	14.5	4	6.5	5	8.5	5	7.5	5	11.5	0	5	11.5	4	14.0	0.36	0.90	0.37	0.36	0.33	0.39	0.27	93	107	119
	30'-0"	14	15	11	8	4	7.0	5	8.5	5	14.0	5	14.0	4	6.5	5	9.0	5	7.0	5	11.5	0	5	11.5	4	14.0	0.36	0.90	0.37	0.36	0.30	0.38	0.27	94	108	120
	31'-8"	14	16	11	8	4	7.0	5	8.5	5	14.5	5	14.5	4	6.5	5	9.0	5	7.5	5	11.5	0	5	11.5	4	14.0	0.36	0.90	0.36	0.36	0.30	0.38	0.27	94	109	121

SPAN (S) = 7 ft — HT (ft) = 9 or 10

Loading	Design Fill (ft-in)	TS Thick	BS Thick.	TX Thick	TI Thick.	A1 Size	A1 Bars c to c	J3 Size	J3 Bars c to c	H1 Size	H1 Bars c to c	H2 Size	H2 Bars c to c	A2 Size	A2 Bars c to c	J4 Size	J4 Bars c to c	H3 Size	H3 Bars c to c	B1 Size	B1 Bars c to c	B2 Bars G1	B2 Bars Size	B2 Bars c to c	F Size	F Bars c to c	J4 C4	J4 K3	H3 C7	J3 C1	J3 K2	H1 C5	H2 C6	"C" Multiplier S = 7 ft (in)	"K" Multiplier HT = 9 ft (in)	"K" Multiplier HT = 10 ft (in)
HS20	0'-10"	10	11	9	9	5	8.0	4	7.5	5	15.5	5	15.5	4	6.5	5	6.5	5	8.5	5	11.5	12	5	11.0	4	14.0	0.61	0.94	0.53	0.46	0.23	0.84	0.41	93	124	136
	2'-7"	8	9	9	9	4	6.5	4	7.0	5	17.5	5	17.5	4	8.5	5	9.0	5	6.5	5	11.5	12	5	11.5	4	14.0	0.52	0.95	0.47	0.46	0.22	0.84	0.31	93	120	132
	4'-3"	8	9	9	9	4	10.5	4	8.0	4	14.5	4	14.5	4	9.5	4	6.0	5	8.5	5	11.5	12	5	11.5	4	14.0	0.48	0.95	0.42	0.53	0.22	0.47	0.30	93	120	132
	5'-11"	8	9	9	9	4	11.0	4	7.5	4	14.5	4	14.5	4	9.0	5	9.0	5	9.0	5	11.5	12	5	11.5	4	14.0	0.47	0.95	0.39	0.47	0.22	0.43	0.29	93	120	132
	7'-6"	8	9	9	9	4	10.0	4	7.0	4	13.0	4	13.0	4	8.0	5	8.5	5	9.0	5	11.5	0	5	11.5	4	14.0	0.45	0.95	0.38	0.45	0.22	0.41	0.28	93	120	132
HS20 MOD	0'-8"	12	12	9	9	5	7.5	4	7.5	5	14.5	5	14.5	4	6.0	5	6.0	5	8.0	5	11.5	12	5	9.5	4	14.0	0.61	0.93	0.53	0.46	0.24	0.84	0.45	93	127	139
	2'-6"	9	10	9	9	4	6.0	4	6.5	5	17.0	5	17.0	4	8.5	4	6.0	5	6.0	5	11.5	12	5	11.5	4	14.0	0.53	0.95	0.49	0.46	0.22	0.84	0.32	93	122	134
	4'-3"	8	9	9	9	4	9.0	4	7.0	4	12.5	4	12.5	4	8.5	4	6.0	5	7.5	5	11.5	12	5	11.5	4	14.0	0.48	0.95	0.42	0.54	0.22	0.49	0.30	93	120	132
	5'-11"	8	9	9	9	4	9.5	4	7.0	4	12.5	4	12.5	4	8.0	5	9.0	5	8.5	5	11.5	12	5	11.5	4	14.0	0.47	0.95	0.40	0.47	0.22	0.44	0.29	93	120	132
	7'-6"	8	10	9	9	4	9.5	4	7.0	4	12.5	4	12.5	4	8.0	4	6.5	5	8.0	5	11.5	0	5	11.5	4	14.0	0.46	0.95	0.38	0.45	0.22	0.42	0.28	93	121	133
HS20 or HS20 MOD	9'-2"	8	10	9	9	4	9.0	4	6.0	5	18.0	5	18.0	4	8.5	4	6.0	4	6.0	5	11.5	0	5	11.5	4	14.0	0.45	0.95	0.37	0.44	0.21	0.40	0.28	93	121	133
	10'-10"	8	10	9	9	4	8.5	5	9.0	5	16.5	5	16.5	4	7.5	5	8.5	5	9.0	5	11.5	0	5	11.5	4	14.0	0.45	0.95	0.37	0.44	0.23	0.39	0.28	93	121	133
	12'-4"	9	11	9	9	4	7.5	5	8.0	5	15.0	5	15.0	4	8.0	5	8.0	4	6.0	5	11.5	0	5	11.5	4	14.0	0.45	0.95	0.36	0.44	0.23	0.39	0.28	93	123	135
	14'-0"	9	11	9	9	4	8.0	5	7.5	5	16.5	5	16.5	4	7.5	5	7.0	5	9.0	5	11.5	0	5	11.0	4	14.0	0.44	0.95	0.37	0.44	0.26	0.39	0.28	93	123	135
	15'-8"	9	11	10	9	4	8.5	5	9.0	5	16.5	5	16.5	4	7.5	5	8.5	5	9.0	5	11.5	0	5	11.5	4	14.0	0.43	0.95	0.36	0.43	0.26	0.39	0.28	94	123	135
	17'-3"	10	12	10	9	4	8.0	5	7.5	5	15.5	5	15.5	4	8.0	5	7.5	4	6.0	5	11.5	0	5	11.0	4	14.0	0.43	0.95	0.36	0.43	0.26	0.39	0.28	94	125	137
	18'-10"	10	12	10	9	4	8.0	5	7.0	5	16.0	5	16.0	4	7.5	5	7.0	5	8.5	5	11.5	0	5	11.0	4	14.0	0.43	0.94	0.36	0.43	0.26	0.39	0.27	94	125	137
	20'-5"	11	13	11	9	4	7.5	5	8.0	5	15.0	5	15.0	4	7.5	5	7.5	5	9.0	5	11.5	0	5	11.5	4	14.0	0.43	0.94	0.36	0.43	0.26	0.38	0.27	94	127	139
	22'-1"	11	13	11	9	4	7.5	5	7.0	5	15.5	5	15.5	4	7.0	5	7.0	5	8.5	5	11.5	0	5	11.0	4	14.0	0.43	0.93	0.36	0.43	0.26	0.38	0.27	94	127	139
	23'-7"	12	14	11	9	4	7.0	5	7.0	5	15.0	5	15.0	4	7.0	5	7.0	5	8.0	5	11.5	0	5	10.5	4	14.0	0.43	0.93	0.36	0.43	0.27	0.38	0.27	94	129	141
	25'-3"	12	14	12	9	4	7.0	5	7.5	5	15.5	5	15.5	4	7.0	5	7.0	5	8.0	5	11.5	0	5	11.0	4	14.0	0.43	0.93	0.36	0.43	0.27	0.38	0.27	95	129	141
	26'-11"	12	14	12	9	4	7.0	5	7.0	5	14.5	5	14.5	4	6.5	5	7.0	5	7.5	5	11.5	0	5	10.5	4	14.0	0.43	0.93	0.36	0.43	0.27	0.38	0.27	95	129	141
	28'-5"	13	15	12	9	4	7.0	5	7.0	5	15.0	5	15.0	4	7.0	5	7.0	5	8.0	5	11.5	0	5	10.0	4	14.0	0.43	0.92	0.36	0.43	0.27	0.38	0.27	95	131	143
	30'-1"	13	15	13	9	4	7.0	5	7.0	5	14.5	5	14.5	4	6.5	5	7.0	5	7.5	5	11.5	0	5	10.5	4	14.0	0.43	0.92	0.36	0.43	0.27	0.38	0.27	95	131	143
	31'-8"	14	16	13	9	4	7.0	5	7.0	5	15.0	5	15.0	4	6.5	5	7.0	5	8.0	5	11.5	0	5	10.0	4	14.0	0.43	0.92	0.35	0.43	0.27	0.37	0.27	95	133	145

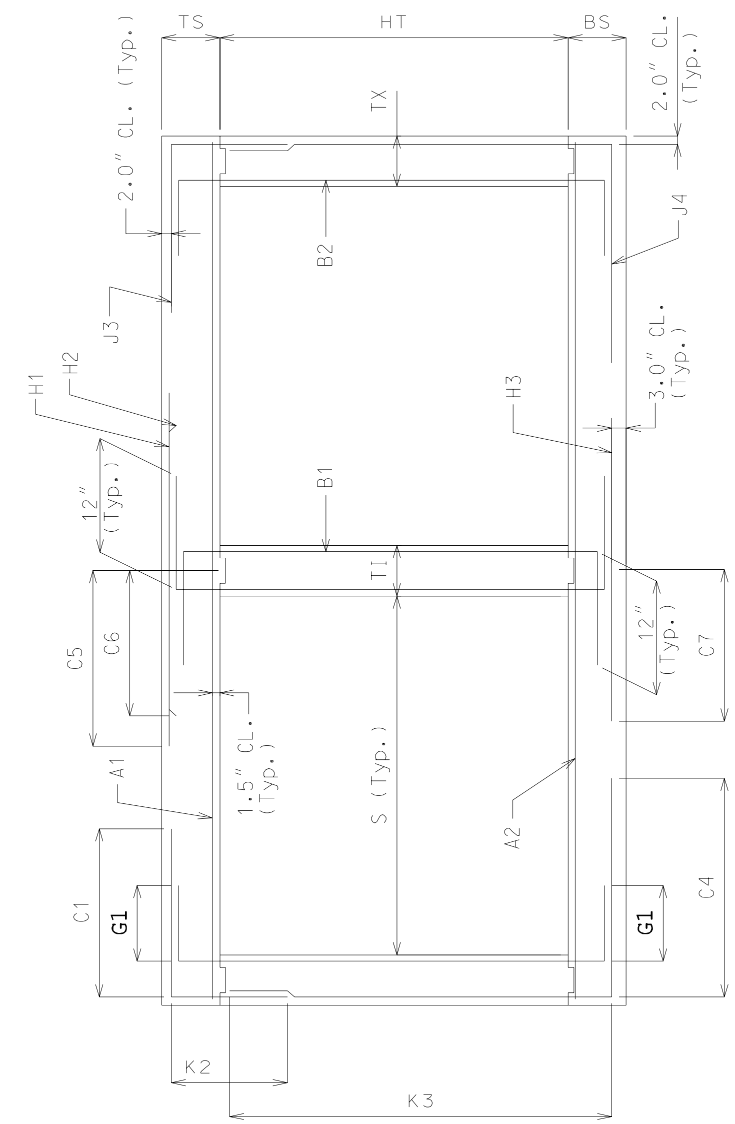

SECTION THRU BOX

NOTE: IF DESIGN FILL FALLS BETWEEN TABULATED FILLS, USE THE ADJACENT TABULATED FILL WHICH YIELDS THE GREATER MEMBER THICKNESS. IF THE MEMBER THICKNESSES ARE EQUAL, USE THE ADJACENT TABULATED FILL WHICH YIELDS THE GREATER AREA OF REINFORCEMENT.

SPECIAL DESIGNS ARE REQUIRED WHEN THE DESIGN FILL IS OUTSIDE THE RANGE OF TABULATED FILLS.

ALL DIMENSIONS ARE IN inch UNLESS OTHERWISE SPECIFIED.

COEFFICIENTS: DIMENSIONS MARKED WITH C# OR K# ARE THE PRODUCT OF THE COEFFICIENT AND ITS ASSOCIATED MULTIPLIER.

DESIGN FILL HEIGHT GIVEN IN THE TABLES IS THE HEIGHT FROM THE TOP OF THE EARTH FILL OR ROADWAY TO THE TOP OF THE TOP SLAB.

ALL CULVERTS MEET STRENGTH REQUIREMENTS FOR MILITARY 24 kips TANDEM AXLE LOADING.

MISSOURI HIGHWAY AND TRANSPORTATION COMMISSION

CONCRETE DOUBLE BOX CULVERT

MEMBER SIZES AND REINFORCEMENT

(HS20 & HS20 MOD. LOADING)

DATE: | EFFECTIVE: 04-01-2002 | 703.45B

Span (S) = 8 ft

HT (ft) = 5 or 6 or 7

DESIGN FILL		MEMBER THICKNESSES				TOP SLAB BARS								BOTTOM SLAB BARS						WALL BARS							COEFFICIENTS (see note)											"C" Multiplier	"K" Multiplier		
		TS	BS	TX	TI	A1	Bars	J3	Bars	H1	Bars	H2	Bars	A2	Bars	J4	Bars	H3	Bars	B1	Bars	B2 Bars			F	Bars	J4		H3		J3		H1		H2			S = 8 ft	HT = 5 ft	HT = 6 ft	HT = 7 ft
	(ft-in)	Thick	Thick.	Thick	Thick.	Size	c to c	Size	c to c	Size	c to c	Size	c to c	Size	c to c	Size	c to c	Size	c to c	Size	c to c	G1	Size	c to c	Size	c to c	C4	K3	C7		C1	K2	C5		C6			in	in	in	in
HS20	0'-10"	10	10	8	8	5	7.0	4	7.0	5	13.0	5	13.0	4	6.0	6	8.0	5	6.0	5	11.5	12	5	6.5	4	14.0	0.45	0.91	0.49		0.44	0.37	0.83		0.38			104	75	87	99
	2'-7"	8	9	8	8	5	8.5	4	6.5	5	12.5	5	12.5	4	7.0	4	6.0	6	7.0	5	11.5	12	5	11.0	4	14.0	0.34	0.93	0.48		0.43	0.36	0.58		0.30			104	72	84	96
	4'-3"	8	9	8	8	4	8.0	4	9.0	5	16.5	5	16.5	4	8.5	4	9.0	5	6.5	5	11.5	12	5	11.5	4	14.0	0.33	0.93	0.41		0.36	0.36	0.45		0.28			104	72	84	96
	5'-11"	8	9	8	8	4	8.5	4	9.0	5	16.5	5	16.5	4	7.5	4	9.0	5	7.0	5	11.5	12	5	11.5	4	14.0	0.32	0.93	0.39		0.33	0.36	0.42		0.27			104	72	84	96
	7'-6"	8	10	8	8	4	7.5	4	8.5	5	14.5	5	14.5	4	7.5	4	9.0	5	8.0	5	11.5	0	5	11.5	4	14.0	0.30	0.93	0.37		0.31	0.35	0.40		0.26			104	73	85	97
HS20 MOD	0'-8"	12	11	8	8	5	7.0	4	7.5	5	12.5	5	12.5	5	9.0	6	7.5	5	6.0	5	11.5	12	5	6.0	4	14.0	0.43	0.90	0.49		0.44	0.38	0.83		0.42			104	78	90	102
	2'-6"	9	10	8	8	5	7.5	4	6.0	6	16.5	6	16.5	4	6.0	5	8.5	6	7.0	5	11.5	12	5	11.5	4	14.0	0.35	0.92	0.50		0.48	0.36	0.72		0.33			104	74	86	98
	4'-3"	8	9	8	8	4	7.0	4	7.5	5	14.5	5	14.5	4	7.5	4	7.5	6	8.5	5	11.5	12	5	11.5	4	14.0	0.33	0.93	0.44		0.37	0.36	0.47		0.28			104	72	84	96
	5'-11"	8	10	8	8	4	7.5	4	8.0	5	14.5	5	14.5	4	7.5	4	9.0	5	6.5	5	11.5	12	5	11.5	4	14.0	0.31	0.93	0.39		0.33	0.36	0.43		0.27			104	73	85	97
	7'-6"	8	10	8	8	4	7.0	4	8.0	5	14.0	5	14.0	4	7.0	4	8.5	5	7.5	5	11.5	0	5	11.5	4	14.0	0.30	0.93	0.37		0.31	0.35	0.41		0.26			104	73	85	97
HS20 or HS20 MOD	9'-2"	8	10	8	8	4	7.0	4	7.0	5	12.5	5	12.5	4	7.0	4	8.5	5	7.0	5	11.5	0	5	11.5	4	14.0	0.30	0.93	0.36		0.30	0.35	0.39		0.25			104	73	85	97
	10'-9"	9	11	8	8	4	7.0	4	7.0	5	14.0	5	14.0	4	7.0	4	8.5	5	7.5	5	11.5	0	5	11.5	4	14.0	0.29	0.92	0.36		0.29	0.36	0.38		0.26			104	75	87	99
	12'-3"	10	11	8	8	4	7.0	4	7.0	5	12.5	5	12.5	4	6.5	4	7.0	5	6.5	5	11.5	0	5	11.5	4	14.0	0.28	0.91	0.37		0.29	0.36	0.38		0.26			104	76	88	100
	13'-11"	10	12	8	8	4	7.0	4	6.5	5	13.0	5	13.0	4	7.0	4	7.0	5	7.0	5	11.5	0	5	11.5	4	14.0	0.28	0.92	0.36		0.29	0.36	0.38		0.26			104	77	89	101
	15'-6"	11	13	8	8	4	7.0	4	6.5	5	14.0	5	14.0	4	6.5	4	7.0	5	6.0	5	11.5	0	5	11.5	4	14.0	0.27	0.91	0.37		0.28	0.37	0.38		0.26			104	79	91	103
	17'-2"	11	13	8	8	4	7.0	4	6.5	5	13.5	5	13.5	4	7.0	4	7.0	5	7.0	5	11.5	0	5	11.5	4	14.0	0.27	0.91	0.36		0.28	0.36	0.38		0.26			104	79	91	103
	18'-9"	11	13	8	8	4	6.5	4	6.0	5	12.5	5	12.5	4	6.0	4	6.5	5	7.0	5	11.5	0	5	11.5	4	14.0	0.27	0.91	0.36		0.28	0.36	0.38		0.26			104	79	91	103
	20'-4"	12	14	8	8	4	6.5	5	9.0	5	12.5	5	12.5	4	6.5	4	6.5	5	7.0	5	11.5	0	5	11.5	4	14.0	0.27	0.90	0.36		0.28	0.37	0.38		0.26			104	81	93	105
	21'-11"	13	14	8	8	4	6.5	5	9.0	5	13.0	5	13.0	4	6.0	5	9.0	5	6.0	5	11.5	0	5	11.5	4	14.0	0.27	0.89	0.36		0.28	0.38	0.38		0.26			104	82	94	106
	23'-6"	13	15	9	8	4	6.0	4	6.0	5	12.5	5	12.5	4	6.0	4	6.5	5	6.5	5	11.5	0	5	11.5	4	14.0	0.27	0.89	0.36		0.28	0.37	0.38		0.26			105	83	95	107
	25'-1"	14	16	9	8	4	6.0	4	6.0	5	12.5	5	12.5	4	6.0	4	6.5	5	7.0	5	11.5	0	5	11.5	4	14.0	0.27	0.89	0.36		0.28	0.37	0.38		0.26			105	85	97	109
	26'-9"	14	16	9	8	5	9.0	5	9.0	5	12.0	5	12.0	5	9.0	4	6.5	5	6.5	5	11.5	0	5	11.5	4	14.0	0.27	0.89	0.36		0.28	0.37	0.38		0.26			105	85	97	109
	28'-3"	15	17	9	8	5	9.0	5	9.0	5	12.5	5	12.5	5	9.0	4	6.0	5	6.5	5	11.5	0	5	11.5	4	14.0	0.27	0.88	0.36		0.33	0.38	0.42		0.31			105	87	99	111
	29'-11"	15	17	10	8	5	9.0	4	6.0	6	16.5	6	16.5	5	8.5	4	6.5	5	6.0	5	11.5	0	5	11.5	4	14.0	0.28	0.88	0.36		0.30	0.38	0.45		0.33			105	87	99	111
	31'-6"	16	18	10	8	5	9.0	4	6.0	5	12.0	5	12.0	5	9.0	4	6.5	5	6.0	5	11.5	0	5	11.5	4	14.0	0.27	0.87	0.36		0.30	0.38	0.42		0.31			105	89	101	113

SPAN (S) = 8 ft

HT (ft) = 8 or 9

DESIGN FILL		MEMBER THICKNESSES				TOP SLAB BARS								BOTTOM SLAB BARS						WALL BARS							COEFFICIENTS (see note)											"C" Multiplier	"K" Multiplier	
		TS	BS	TX	TI	A1	Bars	J3	Bars	H1	Bars	H2	Bars	A2	Bars	J4	Bars	H3	Bars	B1	Bars	B2 Bars			F	Bars	J4		H3		J3		H1		H2			S = 8 ft	HT = 8 ft	HT = 9 ft
	(ft-in)	Thick	Thick.	Thick	Thick.	Size	c to c	Size	c to c	Size	c to c	Size	c to c	Size	c to c	Size	c to c	Size	c to c	Size	c to c	G1	Size	c to c	Size	c to c	C4	K3	C7		C1	K2	C5		C6			in	in	in
HS20	0'-10"	10	10	9	9	5	7.0	4	7.0	5	12.5	5	12.5	4	6.0	6	8.0	5	6.0	5	11.5	12	5	7.0	4	14.0	0.46	0.93	0.49		0.44	0.25	0.83		0.38			105	111	123
	2'-7"	8	10	9	9	5	8.5	4	6.0	5	12.5	5	12.5	4	7.0	5	9.0	6	7.0	5	11.5	12	5	11.5	4	14.0	0.41	0.95	0.48		0.51	0.24	0.61		0.30			105	109	121
	4'-3"	8	9	9	9	4	8.0	4	8.0	5	16.5	5	16.5	4	8.0	4	6.5	5	6.5	5	11.5	12	5	11.5	4	14.0	0.38	0.95	0.41		0.42	0.24	0.46		0.28			105	108	120
	5'-11"	8	9	9	9	4	8.0	4	8.0	5	16.0	5	16.0	4	7.0	4	6.5	5	6.5	5	11.5	12	5	11.5	4	14.0	0.37	0.95	0.39		0.39	0.24	0.42		0.27			105	108	120
	7'-6"	8	10	9	9	4	7.5	4	7.0	5	14.5	5	14.5	4	7.0	4	7.0	5	8.0	5	11.5	0	5	11.5	4	14.0	0.36	0.95	0.37		0.36	0.24	0.40		0.26			105	109	121
HS20 MOD	0'-8"	12	11	9	9	5	7.0	4	7.0	5	12.0	5	12.0	5	8.5	6	7.0	6	8.5	5	11.5	12	5	7.0	4	14.0	0.49	0.92	0.52		0.44	0.26	0.83		0.43			105	114	126
	2'-6"	9	10	9	9	5	7.0	5	8.5	6	16.0	6	16.0	4	6.0	5	7.5	6	7.0	5	11.5	12	5	11.5	4	14.0	0.42	0.94	0.50		0.45	0.28	0.85		0.33			105	110	122
	4'-3"	8	10	9	9	4	7.0	4	7.0	5	14.5	5	14.5	4	7.5	4	7.0	6	8.5	5	11.5	12	5	11.5	4	14.0	0.39	0.95	0.44		0.43	0.24	0.48		0.28			105	109	121
	5'-11"	8	10	9	9	4	7.5	4	7.0	5	14.5	5	14.5	4	7.5	4	7.0	5	7.5	5	11.5	12	5	11.5	4	14.0	0.37	0.95	0.39		0.39	0.24	0.43		0.27			105	109	121
	7'-6"	8	10	9	9	4	7.0	4	7.0	5	13.5	5	13.5	4	7.0	4	7.0	5	7.5	5	11.5	0	5	11.5	4	14.0	0.36	0.95	0.37		0.36	0.24	0.41		0.26			105	109	121
HS20 or HS20 MOD	9'-2"	8	10	9	9	4	7.0	4	6.5	5	12.5	5	12.5	4	6.5	4	7.0	5	7.0	5	11.5	0	5	11.5	4	14.0	0.35	0.95	0.36		0.35	0.24	0.39		0.26			105	109	121
	10'-9"	9	11	9	9	4	7.0	4	6.0	5	14.0	5	14.0	4	7.0	4	6.5	5	7.5	5	11.5	0	5	11.5	4	14.0	0.34	0.94	0.36		0.35	0.24	0.38		0.26			105	111	123
	12'-4"	9	11	9	9	4	6.5	5	9.0	5	12.5	5	12.5	4	6.5	4	6.0	5	7.0	5	11.5	0	5	11.5	4	14.0	0.34	0.94	0.36		0.35	0.28	0.38		0.26			105	111	123
	13'-11"	10	12	9	9	4	7.0	5	8.5	5	13.5	5	13.5	4	6.5	5	9.0	5	7.0	5	11.5	0	5	11.5	4	14.0	0.34	0.93	0.36		0.34	0.29	0.38		0.26			105	113	125
	15'-6"	11	13	9	9	4	7.0	5	8.0	5	14.0	5	14.0	4	7.0	5	8.5	5	7.5	5	11.5	0	5	11.5	4	14.0	0.34	0.93	0.36		0.34	0.29	0.38		0.26			105	115	127
	17'-2"	11	13	9	9	4	7.0	5	7.0	5	13.0	5	13.0	4	6.5	5	7.5	5	7.0	5	11.5	0	5	11.5	4	14.0	0.34	0.93	0.36		0.34	0.29	0.38		0.26			105	115	127
	18'-9"	11	13	9	9	4	6.5	5	7.0	5	12.5	5	12.5	4	6.0	5	7.0	5	7.0	5	11.5	0	5	11.5	4	14.0	0.33	0.93	0.35		0.34	0.29	0.37		0.26			105	115	127
	20'-4"	12	14	10	9	4	7.0	5	7.5	5	13.0	5	13.0	4	6.5	5	8.0	5	7.0	5	11.5	0	5	11.5	4	14.0	0.34	0.92	0.35		0.34	0.29	0.37		0.26			106	117	129
	22'-0"	12	14	10	9	4	6.0	5	7.0	5	12.5	5	12.5	4	6.0	5	7.5	5	6.5	5	11.5	0	5	11.5	4	14.0	0.33	0.92	0.35		0.34	0.29	0.37		0.26			106	117	129
	23'-6"	13	15	10	9	4	6.0	5	7.0	5	12.5	5	12.5	4	6.0	5	7.0	5	7.0	5	11.5	0	5	11.5	4	14.0	0.33	0.91	0.35		0.34	0.30	0.37		0.26			106	119	131
	25'-1"	14	16	11	9	4	6.0	5	7.5	5	12.5	5	12.5	5	9.0	5	7.5	5	6.5	5	11.5	0	5	11.5	4	14.0	0.34	0.91	0.35		0.34	0.30	0.37		0.25			106	121	133
	26'-9"	14	16	11	9	4	6.0	5	7.0	5	12.5	5	12.5	5	9.0	5	7.5	5	6.5	5	11.5	0	5	11.5	4	14.0	0.34	0.91	0.35		0.34	0.30	0.37		0.25			106	121	133
	28'-3"	15	17	11	9	4	6.0	5	7.0	5	12.5	5	12.5	5	9.0	5	7.0	5	7.0	5	11.5	0	5	11.5	4	14.0	0.34	0.90	0.35		0.39	0.30	0.42		0.30			106	123	135
	29'-11"	15	17	12	9	5	9.0	5	7.5	5	12.5	5	12.5	5	9.0	5	7.5	5	6.5	5	11.5	0	5	11.5	4	14.0	0.34	0.90	0.35		0.39	0.30	0.41		0.30			107	123	135
	31'-6"	16	18	12	9	5	9.0	5	7.0	5	12.0	5	12.0	5	8.5	5	7.0	5	6.0	5	11.5	0	5	11.5	4	14.0	0.34	0.90	0.35		0.39	0.31	0.41		0.30			107	125	137

SPAN (S) = 8 ft

HT (ft) = 10 or 11

DESIGN FILL		MEMBER THICKNESSES				TOP SLAB BARS								BOTTOM SLAB BARS						WALL BARS							COEFFICIENTS (see note)											"C" Multiplier	"K" Multiplier	
		TS	BS	TX	TI	A1	Bars	J3	Bars	H1	Bars	H2	Bars	A2	Bars	J4	Bars	H3	Bars	B1	Bars	B2 Bars			F	Bars	J4		H3		J3		H1		H2			S = 8 ft	HT = 10 ft	HT = 11 ft
	(ft-in)	Thick	Thick.	Thick	Thick.	Size	c to c	Size	c to c	Size	c to c	Size	c to c	Size	c to c	Size	c to c	Size	c to c	Size	c to c	G1	Size	c to c	Size	c to c	C4	K3	C7		C1	K2	C5		C6			in	in	in
HS20	0'-10"	10	10	9	9	5	7.0	4	6.0	5	12.5	5	12.5	5	9.0	6	7.0	6	8.5	5	11.5	12	5	7.5	4	14.0	0.59	0.94	0.51		0.44	0.21	0.83		0.38			105	135	147
	2'-7"	8	10	9	9	5	8.5	5	8.5	5	12.5	5	12.5	4	7.0	5	7.5	5	6.0	5	11.5	12	5	11.5	4	14.0	0.52	0.96	0.48		0.45	0.21	0.83		0.30			105	133	145
	4'-3"	8	9	9	9	4	7.5	4	6.0	5	15.5	5	15.5	4	7.0	5	7.0	5	6.5	5	11.5	12	5	11.0	4	14.0	0.47	0.96	0.40		0.51	0.20	0.47		0.28			105	132	144
	5'-11"	8	10	9	9	4	8.0	5	9.0	5	16.0	5	16.0	4	8.0	5	8.5	5	8.0	5	11.5	12	5	11.5	4	14.0	0.45	0.96	0.38		0.46	0.21	0.42		0.27			105	133	145
	7'-6"	8	10	9	9	4	7.5	5	8.5	5	14.5	5	14.5	4	7.0	5	7.5	5	8.0	5	11.5	0	5	11.5	4	14.0	0.44	0.96	0.36		0.44	0.21	0.40		0.26			105	133	145
HS20 MOD	0'-8"	12	11	9	9	5	7.0	4	6.0	6	16.5	6	16.5	5	8.5	6	7.0	6	8.5	5	11.5	12	5	7.0	4	14.0	0.60	0.93	0.51		0.44	0.22	0.85		0.45			105	138	150
	2'-5"	10	11	9	9	5	7.5	5	8.0	6	16.0	6	16.0	5	9.0	5	7.0	6	7.0	5	11.5	12	5	11.5	4	14.0	0.52	0.95	0.50		0.45	0.23	0.85		0.33			105	136	148
	4'-3"	8	10	9	9	4	7.0	5	9.0	5	14.0	5	14.0	4	7.0	5	8.5	5	7.0	5	11.5	12	5	11.0	4	14.0	0.48	0.96	0.42		0.52	0.21	0.49		0.29			105	133	145
	5'-11"	8	10	9	9	4	7.0	5	8.5	5	14.5	5	14.5	4	7.0	5	8.5	5	7.0	5	11.5	12	5	11.5	4	14.0	0.45	0.96	0.39		0.46	0.21	0.43		0.28			105	133	145
	7'-6"	8	10	9	9	4	7.0	5	8.0	5	14.0	5	14.0	4	7.0	5	7.5	5	7.5	5	11.5	0	5	11.5	4	14.0	0.44	0.96	0.37		0.44	0.21	0.41		0.27			105	133	145
HS20 or HS20 MOD	9'-2"	8	11	9	9	4	7.0	5	7.0	5	13.0	5	13.0	4	7.0	5	7.0	5	9.0	5	11.5	0	5	11.5	4	14.0	0.44	0.96	0.36		0.42	0.23	0.39		0.26			105	134	146
	10'-9"	9	11	9	9	4	7.0	5	7.0	5	14.5	5	14.5	4	7.0	5	7.0	5	7.5	5	11.5	0	5	11.0	4	14.0	0.42	0.95	0.36		0.42	0.23	0.38		0.26			105	135	147
	12'-4"	9	12	10	9	4	7.0	5	7.5	5	13.0	5	13.0	4	6.5	5	7.0	5	7.0	5	11.5	0	5	11.0	4	14.0	0.42	0.95	0.36		0.41	0.23	0.38		0.26			106	136	148
	13'-11"	10	12	10	9	4	7.0	5	7.0	5	14.0	5	14.0	4	6.5	5	7.0	5	7.0	5	11.5	0	5	11.0	4	14.0	0.41	0.94	0.36		0.41	0.24	0.38		0.26			106	137	149
	15'-7"	10	13	10	9	4	7.0	5	6.5	5	12.5	5	12.5	4	7.0	5	6.5	5	8.0	5	11.5	0	5	10.0	4	14.0	0.41	0.94	0.35		0.41	0.24	0.38		0.26			106	138	150
	17'-2"	11	13	11	9	4	7.0	5	7.0	5	13.5	5	13.5	4	6.5	5	7.0	5	7.0	5	11.5	0	5	11.0	4	14.0	0.41	0.94	0.35		0.41	0.24	0.37		0.26			106	139	151
	18'-9"	11	13	11	9	4	7.0	5	7.0	5	13.5	5	13.5	4	6.5	5	6.5	5	7.0	5	11.5	0	5	10.0	4	14.0	0.40	0.94	0.35		0.40	0.24	0.37		0.26			106	139	151
	20'-4"	12	14	12	9	4	7.0	5	7.0	5	14.0	5	14.0	4	6.5	5	7.0	5	7.0	5	11.5	0	5	11.0	4	14.0	0.40	0.93	0.35		0.40	0.24	0.37		0.26			107	141	153
	22'-0"	12	14	12	9	4	6.5	5	7.0	5	12.5	5	12.5	4	6.0	5	6.5	5	7.0	5	11.5	0	5	11.5	4	14.0	0.40	0.93	0.35		0.40	0.24	0.37		0.25			107	141	153
	23'-6"	13	15	12	9	4	7.0	5	6.5	5	13.5	5	13.5	4	6.0	5	6.0	5	7.0	5	11.5	0	5	9.0	4	14.0	0.40	0.93	0.35		0.40	0.25	0.37		0.25			107	143	155
	25'-2"	13	15	13	9	4	6.0	5	7.0	5	12.5	5	12.5	5	9.0	5	6.5	5	6.5	5	11.5	0	5	10.0	4	14.0	0.40	0.93	0.34		0.40	0.25	0.37		0.25			107	143	155
	26'-9"	14	16	13	9	4	6.5	5	6.5	5	13.0	5	13.0	5	9.0	5	6.0	5	7.0	5	11.5	0	5	9.0	4	14.0	0.40	0.92	0.34		0.40	0.25	0.36		0.25			107	145	157
	28'-4"	14	16	13	9	4	6.0	5	6.0	5	12.5	5	12.5	5	9.0	5	6.0	5	6.5	5	11.5	0	5	9.0	4	14.0	0.40	0.92	0.34		0.40	0.25	0.36		0.25			107	145	157
	29'-11"	15	17	14	9	4	6.0	5	6.5	5	12.5	5	12.5	5	9.0	5	6.5	5	6.5	5	11.5	0	5	9.5	4	14.0	0.40	0.92	0.34		0.45	0.26	0.41		0.30			108	147	159
	31'-7"	15	17	14	9	5	9.0	5	6.0	5	12.0	5	12.0	5	8.5	5	6.0	5	6.0	5	11.5	0	5	9.0	4	14.0	0.40	0.92	0.34		0.45	0.26	0.41		0.30			108	147	159

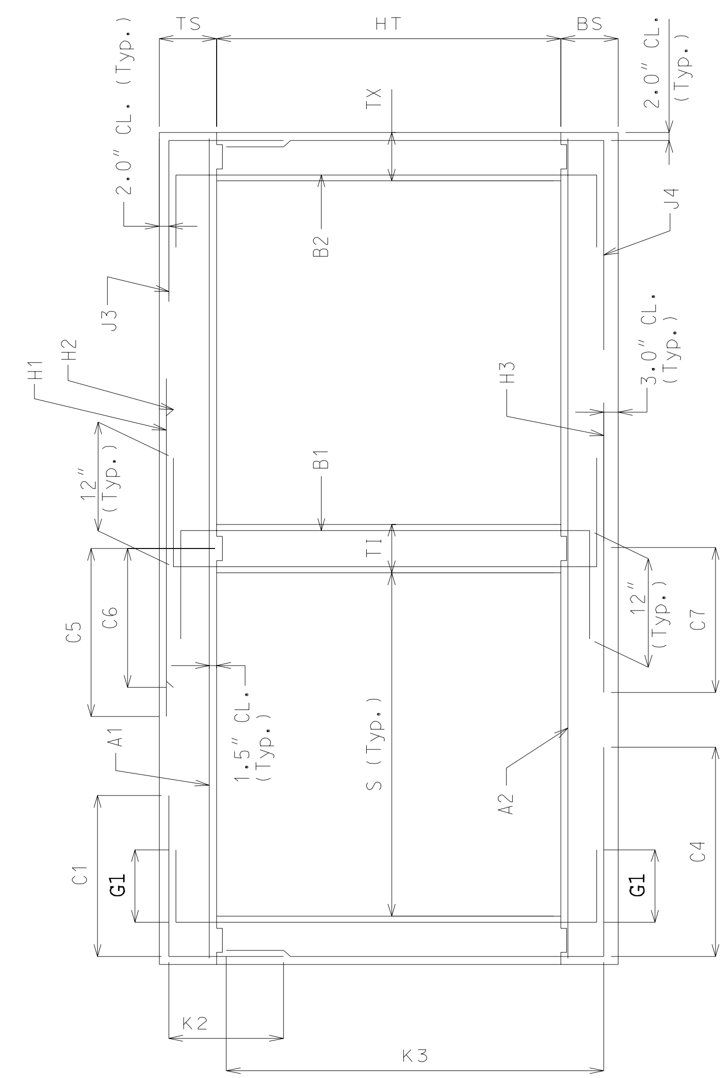

SECTION THRU BOX

NOTE: IF DESIGN FILL FALLS BETWEEN TABULATED FILLS, USE THE ADJACENT TABULATED FILL WHICH YIELDS THE GREATER MEMBER THICKNESS. IF THE MEMBER THICKNESSES ARE EQUAL, USE THE ADJACENT TABULATED FILL WHICH YIELDS THE GREATER AREA OF REINFORCEMENT.

SPECIAL DESIGNS ARE REQUIRED WHEN THE DESIGN FILL IS OUTSIDE THE RANGE OF TABULATED FILLS.

ALL DIMENSIONS ARE IN inch UNLESS OTHERWISE SPECIFIED.

COEFFICIENTS: DIMENSIONS MARKED WITH C# OR K# ARE THE PRODUCT OF THE COEFFICIENT AND ITS ASSOCIATED MULTIPLIER.

DESIGN FILL HEIGHT GIVEN IN THE TABLES IS THE HEIGHT FROM THE TOP OF THE EARTH FILL OR ROADWAY TO THE TOP OF THE TOP SLAB.

ALL CULVERTS MEET STRENGTH REQUIREMENTS FOR MILITARY 24 kips TANDEM AXLE LOADING.

MISSOURI HIGHWAY AND TRANSPORTATION COMMISSION

CONCRETE DOUBLE BOX CULVERT

MEMBER SIZES AND REINFORCEMENT

(HS20 & HS20 MOD. LOADING)

DATE:

EFFECTIVE: 04-01-2002

703.45B

Span (S) = 9 ft

HT (ft) = 6 or 7 or 8

	DESIGN FILL	MEMBER THICKNESSES				TOP SLAB BARS								BOTTOM SLAB BARS						WALL BARS							COEFFICIENTS (see note)							"C" Multiplier	"K" Multiplier		
		TS	BS	TX	TI	A1	Bars	J3	Bars	H1	Bars	H2	Bars	A2	Bars	J4	Bars	H3	Bars	B1	Bars	B2 Bars			F	Bars	J4		H3	J3		H1	H2	S = 9 ft	HT = 6 ft	HT = 7 ft	HT = 8 ft
	(ft-in)	Thick	Thick.	Thick	Thick.	Size	c to c	Size	c to c	Size	c to c	Size	c to c	Size	c to c	Size	c to c	Size	c to c	Size	c to c	G1	Size	c to c	Size	c to c	C4	K3	C7	C1	K2	C5	C6	in	in	in	in
HS20	0'-10"	10	10	8	8	5	6.0	4	6.0	6	16.5	6	16.5	5	8.5	6	7.0	6	7.0	5	11.5	12	5	6.0	4	14.0	0.43	0.92	0.49	0.43	0.32	0.84	0.38	116	87	99	111
	2'-6"	9	10	8	8	5	7.5	5	9.0	6	14.5	6	14.5	5	9.0	5	7.0	6	7.0	5	11.5	12	5	11.5	4	14.0	0.34	0.93	0.47	0.43	0.31	0.65	0.32	116	86	98	110
	4'-3"	8	9	8	8	4	6.5	4	6.5	5	12.5	5	12.5	4	6.5	4	6.5	6	7.0	5	11.5	12	5	11.5	4	14.0	0.32	0.94	0.42	0.35	0.31	0.44	0.26	116	84	96	108
	5'-11"	8	10	8	8	4	6.5	4	6.5	5	12.5	5	12.5	4	7.0	4	7.0	5	6.5	5	11.5	12	5	11.5	4	14.0	0.30	0.94	0.37	0.32	0.30	0.41	0.25	116	85	97	109
	7'-6"	8	10	8	8	4	6.0	4	6.5	6	16.5	6	16.5	4	6.0	4	6.5	5	6.0	5	11.5	0	5	11.5	4	14.0	0.29	0.94	0.36	0.30	0.30	0.41	0.27	116	85	97	109
HS20 MOD	0'-8"	12	13	8	8	5	6.0	4	6.5	6	16.5	6	16.5	5	7.5	6	7.0	5	6.0	5	11.5	12	5	7.0	4	14.0	0.41	0.91	0.51	0.43	0.32	0.84	0.42	116	92	104	116
	2'-4"	11	11	8	8	5	7.0	5	8.5	6	14.0	6	14.0	5	8.5	5	7.0	6	6.0	5	11.0	12	5	7.5	4	14.0	0.34	0.92	0.48	0.43	0.37	0.84	0.34	116	89	101	113
	4'-3"	8	10	8	8	5	9.0	4	6.0	6	15.5	6	15.5	4	6.5	4	6.0	6	8.0	5	11.5	12	5	11.5	4	14.0	0.32	0.94	0.43	0.36	0.30	0.48	0.29	116	85	97	109
	5'-11"	8	10	8	8	5	9.0	4	6.0	6	16.0	6	16.0	4	6.5	4	6.5	6	8.0	5	11.5	12	5	11.5	4	14.0	0.30	0.94	0.40	0.32	0.30	0.44	0.28	116	85	97	109
	7'-5"	9	11	8	8	4	6.5	4	6.5	6	18.5	6	18.5	4	6.5	4	7.0	5	6.5	5	11.5	0	5	11.5	4	14.0	0.29	0.93	0.37	0.30	0.31	0.42	0.27	116	87	99	111
HS20 MOD or HS20	9'-1"	9	11	8	8	4	6.0	4	6.0	6	16.5	6	16.5	4	6.0	4	6.5	5	6.0	5	11.5	0	5	11.5	4	14.0	0.28	0.93	0.35	0.29	0.31	0.40	0.26	116	87	99	111
	10'-8"	10	12	8	8	4	6.5	4	6.0	5	12.5	5	12.5	4	6.0	4	6.5	5	6.5	5	11.5	0	5	11.5	4	14.0	0.28	0.93	0.35	0.28	0.31	0.37	0.24	116	89	101	113
	12'-3"	10	12	8	8	5	9.0	5	8.5	6	16.0	6	16.0	5	9.0	4	6.0	5	6.0	5	11.5	0	5	11.5	4	14.0	0.27	0.93	0.35	0.28	0.31	0.39	0.27	116	89	101	113
	13'-10"	11	13	8	8	4	6.0	5	8.5	6	16.5	6	16.5	5	9.0	5	9.0	5	6.0	5	11.5	0	5	11.5	4	14.0	0.27	0.92	0.35	0.28	0.32	0.39	0.27	116	91	103	115
	15'-5"	12	14	8	8	4	6.0	5	7.5	5	12.0	5	12.0	4	6.0	5	8.5	5	6.5	5	11.5	0	5	11.5	4	14.0	0.27	0.91	0.35	0.27	0.32	0.37	0.24	116	93	105	117
	17'-1"	12	14	8	8	5	9.0	5	7.0	6	15.5	6	15.5	5	8.5	5	8.0	6	8.5	5	11.5	0	5	11.5	4	14.0	0.27	0.91	0.37	0.27	0.33	0.39	0.27	116	93	105	117
	18'-7"	13	15	9	8	5	9.0	5	8.5	6	16.5	6	16.5	5	9.0	5	9.0	5	6.0	5	11.5	0	5	11.5	4	14.0	0.27	0.90	0.35	0.28	0.33	0.39	0.27	117	95	107	119
	20'-3"	13	15	9	8	5	9.0	5	8.0	6	16.0	6	16.0	5	8.5	5	8.5	6	8.5	5	11.5	0	5	11.5	4	14.0	0.27	0.90	0.37	0.27	0.33	0.39	0.27	117	95	107	119
	21'-10"	14	16	9	8	5	9.0	5	7.5	6	16.0	6	16.0	5	8.5	5	8.5	5	6.0	5	11.5	0	5	11.5	4	14.0	0.27	0.90	0.35	0.27	0.33	0.39	0.27	117	97	109	121
	23'-4"	15	16	10	8	5	8.5	5	8.5	6	15.0	6	15.0	5	8.0	5	9.0	6	7.5	5	11.5	0	5	11.5	4	14.0	0.27	0.90	0.37	0.28	0.34	0.43	0.31	117	98	110	122
	25'-0"	15	17	10	8	5	8.5	5	8.0	6	15.5	6	15.5	5	8.0	5	9.0	6	8.0	5	11.5	0	5	11.5	4	14.0	0.27	0.89	0.37	0.32	0.34	0.43	0.31	117	99	111	123
	26'-7"	16	18	10	8	5	8.5	5	7.5	6	16.0	6	16.0	5	8.0	5	8.5	6	8.0	5	11.5	0	5	11.5	4	14.0	0.27	0.88	0.37	0.32	0.34	0.43	0.30	117	101	113	125
	28'-2"	16	18	10	8	5	8.0	5	7.0	6	14.5	6	14.5	5	7.5	5	8.0	6	7.5	5	11.5	0	5	11.5	4	14.0	0.27	0.88	0.37	0.32	0.34	0.43	0.30	117	101	113	125
	29'-9"	17	19	11	8	5	8.0	5	8.5	6	15.0	6	15.0	5	7.5	5	9.0	6	8.0	5	11.5	0	5	11.5	4	14.0	0.27	0.88	0.37	0.32	0.34	0.42	0.30	118	103	115	127
	31'-4"	18	19	11	8	5	7.5	5	7.5	6	14.5	6	14.5	5	7.0	5	8.5	6	7.0	5	11.5	0	5	11.5	4	14.0	0.27	0.88	0.37	0.32	0.35	0.42	0.30	118	104	116	128

SPAN (S) = 9 ft

HT (ft) = 9 or 10

	DESIGN FILL	MEMBER THICKNESSES				TOP SLAB BARS								BOTTOM SLAB BARS						WALL BARS							COEFFICIENTS (see note)							"C" Multiplier	"K" Multiplier	
		TS	BS	TX	TI	A1	Bars	J3	Bars	H1	Bars	H2	Bars	A2	Bars	J4	Bars	H3	Bars	B1	Bars	B2 Bars			F	Bars	J4		H3	J3		H1	H2	S = 9 ft	HT = 9 ft	HT = 10 ft
	(ft-in)	Thick	Thick.	Thick	Thick.	Size	c to c	Size	c to c	Size	c to c	Size	c to c	Size	c to c	Size	c to c	Size	c to c	Size	c to c	G1	Size	c to c	Size	c to c	C4	K3	C7	C1	K2	C5	C6	in	in	in
HS20	0'-10"	10	10	9	9	5	6.0	5	9.0	6	16.5	6	16.5	5	8.5	6	7.0	6	7.0	5	11.5	12	5	7.0	4	14.0	0.48	0.94	0.49	0.44	0.24	0.84	0.37	117	123	135
	2'-6"	9	10	9	9	5	7.5	5	8.5	6	14.5	6	14.5	5	9.0	5	7.0	6	7.0	5	11.5	12	5	11.5	4	14.0	0.41	0.95	0.46	0.48	0.26	0.84	0.32	117	122	134
	4'-3"	8	10	9	9	4	6.5	4	6.0	5	12.5	5	12.5	4	6.5	5	9.0	6	7.0	5	11.5	12	5	11.5	4	14.0	0.38	0.95	0.41	0.41	0.22	0.44	0.26	117	121	133
	5'-11"	8	10	9	9	4	6.5	4	6.0	5	12.5	5	12.5	4	7.0	4	6.0	5	6.0	5	11.5	12	5	11.5	4	14.0	0.36	0.95	0.37	0.37	0.21	0.40	0.25	117	121	133
	7'-6"	8	10	9	9	4	6.0	5	9.0	5	12.0	5	12.0	4	6.0	5	8.5	5	6.0	5	11.5	0	5	11.5	4	14.0	0.35	0.95	0.35	0.36	0.23	0.39	0.25	117	121	133
HS20 MOD	0'-8"	12	11	9	9	5	6.0	5	9.0	6	15.5	6	15.5	5	8.0	6	7.0	6	7.0	5	11.5	12	5	6.5	4	14.0	0.49	0.93	0.49	0.44	0.25	0.84	0.42	117	126	138
	2'-4"	11	11	9	9	5	7.0	5	8.5	6	15.5	6	15.5	5	9.0	5	7.0	6	7.0	5	11.5	12	5	11.5	4	14.0	0.41	0.93	0.47	0.44	0.27	0.84	0.34	117	125	137
	4'-3"	8	10	9	9	5	9.0	5	9.0	6	15.5	6	15.5	4	6.0	5	8.5	6	8.0	5	11.5	12	5	11.5	4	14.0	0.38	0.95	0.43	0.42	0.23	0.48	0.29	117	121	133
	5'-11"	8	10	9	9	4	6.0	5	9.0	6	16.5	6	16.5	4	6.0	5	9.0	6	8.0	5	11.5	12	5	11.5	4	14.0	0.36	0.95	0.40	0.38	0.23	0.43	0.28	117	121	133
	7'-5"	9	11	9	9	4	6.5	5	9.0	5	12.5	5	12.5	4	6.5	5	8.5	5	6.5	5	11.5	0	5	11.5	4	14.0	0.35	0.95	0.36	0.36	0.23	0.40	0.25	117	123	135
HS20 MOD or HS20	9'-1"	9	11	9	9	4	6.0	5	8.5	5	12.0	5	12.0	5	9.0	5	8.5	5	6.5	5	11.5	0	5	11.5	4	14.0	0.34	0.95	0.35	0.35	0.23	0.37	0.24	117	123	135
	10'-8"	10	12	9	9	4	6.5	5	7.5	5	12.5	5	12.5	4	6.0	5	7.5	5	6.5	5	11.5	0	5	11.5	4	14.0	0.34	0.94	0.35	0.34	0.26	0.37	0.24	117	125	137
	12'-3"	10	12	9	9	4	6.0	5	7.0	6	16.5	6	16.5	5	9.0	5	7.0	5	6.0	5	11.5	0	5	11.5	4	14.0	0.33	0.94	0.35	0.33	0.26	0.39	0.26	117	125	137
	13'-10"	11	13	9	9	4	6.0	5	7.0	5	12.0	5	12.0	5	9.0	5	7.0	5	6.5	5	11.5	0	5	11.5	4	14.0	0.33	0.93	0.35	0.33	0.26	0.37	0.24	117	127	139
	15'-5"	12	14	10	9	4	6.0	5	7.0	5	12.5	5	12.5	4	6.0	5	7.0	5	6.5	5	11.5	0	5	11.5	4	14.0	0.33	0.93	0.35	0.33	0.27	0.37	0.24	118	129	141
	17'-1"	12	14	10	9	5	9.0	5	7.0	6	16.5	6	16.5	5	8.5	5	7.0	5	6.0	5	11.5	0	5	11.5	4	14.0	0.32	0.93	0.35	0.33	0.27	0.39	0.26	118	129	141
	18'-7"	13	15	10	9	5	9.0	5	6.5	6	16.5	6	16.5	5	9.0	5	6.5	5	6.0	5	11.5	0	5	11.5	4	14.0	0.32	0.92	0.35	0.33	0.27	0.39	0.27	118	131	143
	20'-3"	13	15	11	9	5	9.0	5	7.0	6	16.5	6	16.5	5	8.5	5	7.0	5	6.0	5	11.5	0	5	11.5	4	14.0	0.33	0.92	0.34	0.33	0.27	0.38	0.26	118	131	143
	21'-10"	14	16	11	9	4	6.0	5	7.0	6	16.5	6	16.5	5	9.0	5	7.0	5	6.0	5	11.5	0	5	11.5	4	14.0	0.32	0.92	0.34	0.33	0.27	0.38	0.26	118	133	145
	23'-5"	14	16	11	9	5	8.5	5	6.5	6	15.5	6	15.5	5	8.0	5	6.5	6	8.0	5	11.5	0	5	11.5	4	14.0	0.32	0.92	0.36	0.33	0.27	0.38	0.26	118	133	145
	25'-0"	15	17	12	9	5	9.0	5	7.0	6	16.5	6	16.5	5	8.0	5	7.0	6	8.5	5	11.5	0	5	11.5	4	14.0	0.33	0.91	0.36	0.37	0.28	0.42	0.30	119	135	147
	26'-7"	16	18	12	9	5	8.5	5	6.5	6	15.0	6	15.0	5	8.0	5	7.0	5	6.0	5	11.5	0	5	11.5	4	14.0	0.32	0.91	0.34	0.37	0.28	0.42	0.30	119	137	149
	28'-2"	16	18	12	9	5	8.5	5	6.0	6	15.5	6	15.5	5	7.5	5	6.5	6	8.0	5	11.5	0	5	11.0	4	14.0	0.32	0.90	0.36	0.37	0.28	0.42	0.30	119	137	149
	29'-9"	17	19	13	9	5	8.5	5	7.0	6	16.0	6	16.0	5	7.5	5	7.0	6	8.5	5	11.5	0	5	11.5	4	14.0	0.33	0.90	0.36	0.37	0.28	0.42	0.30	119	139	151
	31'-5"	17	19	13	9	5	8.0	5	6.5	6	15.0	6	15.0	5	7.0	5	6.5	6	7.5	5	11.5	0	5	11.0	4	14.0	0.33	0.90	0.36	0.37	0.28	0.42	0.30	119	139	151

SPAN (S) = 9 ft

HT (ft) = 11 or 12

	DESIGN FILL	MEMBER THICKNESSES				TOP SLAB BARS								BOTTOM SLAB BARS						WALL BARS							COEFFICIENTS (see note)							"C" Multiplier	"K" Multiplier	
		TS	BS	TX	TI	A1	Bars	J3	Bars	H1	Bars	H2	Bars	A2	Bars	J4	Bars	H3	Bars	B1	Bars	B2 Bars			F	Bars	J4		H3	J3		H1	H2	S = 9 ft	HT = 11 ft	HT = 12 ft
	(ft-in)	Thick	Thick.	Thick	Thick.	Size	c to c	Size	c to c	Size	c to c	Size	c to c	Size	c to c	Size	c to c	Size	c to c	Size	c to c	G1	Size	c to c	Size	c to c	C4	K3	C7	C1	K2	C5	C6	in	in	in
HS20	0'-10"	10	10	10	10	5	6.0	5	8.5	6	16.0	6	16.0	5	8.0	6	6.5	6	7.0	5	11.5	12	5	7.0	4	14.0	0.55	0.95	0.49	0.44	0.22	0.84	0.38	118	147	159
	2'-6"	9	10	10	10	5	7.5	5	7.5	6	14.5	6	14.5	5	8.5	6	8.5	6	7.0	5	11.5	12	5	11.5	4	14.0	0.50	0.95	0.46	0.44	0.22	0.84	0.32	118	146	158
	4'-3"	8	10	10	10	4	6.5	5	7.5	5	12.5	5	12.5	4	6.5	5	7.0	5	6.0	5	11.5	12	5	9.5	4	14.0	0.45	0.96	0.40	0.48	0.21	0.44	0.27	118	145	157
	5'-11"	8	10	10	10	4	6.5	5	7.0	5	12.5	5	12.5	4	6.5	5	7.0	5	6.0	5	11.5	12	5	11.5	4	14.0	0.43	0.96	0.37	0.43	0.21	0.41	0.26	118	145	157
	7'-6"	8	11	10	10	4	6.0	5	7.0	6	16.5	6	16.5	4	6.5	5	7.0	5	7.5	5	11.5	0	5	11.5	4	14.0	0.42	0.96	0.35	0.41	0.21	0.41	0.27	118	146	158
HS20 MOD	0'-8"	12	11	10	10	5	6.0	5	8.5	6	15.0	6	15.0	5	7.5	6	6.0	6	7.0	5	11.5	12	5	6.5	4	14.0	0.56	0.94	0.50	0.44	0.23	0.84	0.42	118	150	162
	2'-4"	11	11	10	10	5	7.0	5	7.0	6	15.0	6	15.0	5	8.5	5	6.0	6	6.5	5	11.5	12	5	11.5	4	14.0	0.49	0.94	0.47	0.44	0.23	0.84	0.34	118	149	161
	4'-3"	8	10	10	10	5	8.5	5	7.0	6	15.5	6	15.5	5	9.0	5	6.5	6	7.5	5	11.5	12	5	9.5	4	14.0	0.45	0.96	0.43	0.49	0.21	0.48	0.29	118	145	157
	5'-11"	8	11	10	10	5	9.0	5	7.0	6	16.0	6	16.0	4	6.0	5	7.0	6	8.0	5	11.5	12	5	11.5	4	14.0	0.43	0.96	0.40	0.44	0.21	0.43	0.28	118	146	158
	7'-5"	9	11	10	10	4	6.5	5	7.5	5	12.5	5	12.5	4	6.0	5	7.0	5	6.5	5	11.5	0	5	11.5	4	14.0	0.42	0.95	0.36	0.42	0.21	0.40	0.25	118	147	159
HS20 MOD or HS20	9'-1"	9	11	10	10	4	6.0	5	7.0	5	12.0	5	12.0	5	9.0	5	7.0	5	6.0	5	11.5	0	5	11.0	4	14.0	0.41	0.95	0.35	0.41	0.21	0.37	0.24	118	147	159
	10'-8"	10	12	10	10	4	6.5	5	6.5	5	12.5	5	12.5	4	6.0	5	6.5	5	6.5	5	11.5	0	5	10.0	4	14.0	0.40	0.95	0.35	0.40	0.22	0.37	0.25	118	149	161
	12'-3"	10	12	10	10	4	6.0	5	6.0	6	16.5	6	16.5	5	9.0	6	8.5	5	6.0	5	11.5	0	5	9.0	4	14.0	0.42	0.95	0.34	0.39	0.22	0.39	0.27	118	149	161
	13'-10"	11	13	11	10	4	6.5	5	6.5	5	12.0	5	12.0	5	9.0	5	6.0	5	6.5	5	11.5	0	5	10.0	4	14.0	0.39	0.94	0.34	0.39	0.22	0.37	0.24	119	151	163
	15'-6"	11	14	11	10	5	9.0	5	6.0	6	16.0	6	16.0	5	9.0	6	8.5	5	7.0	5	11.5	0	5	9.0	4	14.0	0.41	0.94	0.34	0.39	0.22	0.39	0.26	119	152	164
	17'-1"	12	14	12	10	4	6.0	5	6.5	6	16.5	6	16.5	5	8.5	5	6.0	5	6.0	5	11.5	0	5	10.0	4	14.0	0.39	0.94	0.34	0.39	0.23	0.38	0.26	119	153	165
	18'-7"	13	15	12	10	4	6.0	5	6.0	5	12.0	5	12.0	5	9.0	6	8.5	5	6.0	5	11.5	0	5	9.0	4	14.0	0.41	0.93	0.34	0.39	0.23	0.36	0.24	119	155	167
	20'-3"	13	15	12	10	4	6.0	6	8.5	5	12.0	5	12.0	5	8.5	6	8.0	5	6.0	5	11.5	0	5	9.0	4	14.0	0.40	0.93	0.33	0.40	0.24	0.36	0.24	119	155	167
	21'-11"	13	16	13	10	5	9.0	5	6.0	6	15.5	6	15.5	5	8.5	5	6.0	5	6.5	5	11.5	0	5	9.0	4	14.0	0.38	0.93	0.33	0.38	0.23	0.38	0.26	120	156	168
	23'-5"	14	16	13	10	5	9.0	6	8.5	6	16.5	6	16.5	5	8.0	6	8.0	6	8.5	5	11.5	0	5	9.0	4	14.0	0.40	0.93	0.36	0.40	0.24	0.38	0.26	120	157	169
	25'-0"	15	17	14	10	5	9.0	5	6.0	6	16.5	6	16.5	5	8.5	6	8.5	6	8.5	5	11.5	0	5	9.0	4	14.0	0.40	0.92	0.35	0.43	0.24	0.41	0.30	120	159	171
	26'-8"	15	18	14	10	5	8.5	6	8.0	6	15.5	6	15.5	5	8.0	6	8.0	5	6.0	5	11.5	0	5	9.0	4	14.0	0.40	0.92	0.33	0.44	0.24	0.42	0.30	120	160	172
	28'-2"	16	18	14	10	5	8.5	6	8.0	6	16.0	6	16.0	5	8.0	6	7.5	6	8.5	5	11.5	0	5	8.5	4	14.0	0.40	0.92	0.35	0.44	0.27	0.41	0.30	120	161	173
	29'-10"	16	19	15	10	5	8.0	6	8.0	6	15.0	6	15.0	5	7.5	6	8.5	5	6.0	5	11.5	0	5	8.5	4	14.0	0.40	0.92	0.32	0.45	0.25	0.41	0.30	121	162	174
	31'-5"	17	19	15	10	5	8.5	6	8.0	6	15.5	6	15.5	5	7.5	6	8.0	6	8.0	5	11.5	0	5	8.5	4	14.0	0.40	0.91	0.35	0.44	0.27	0.41	0.30	121	163	175

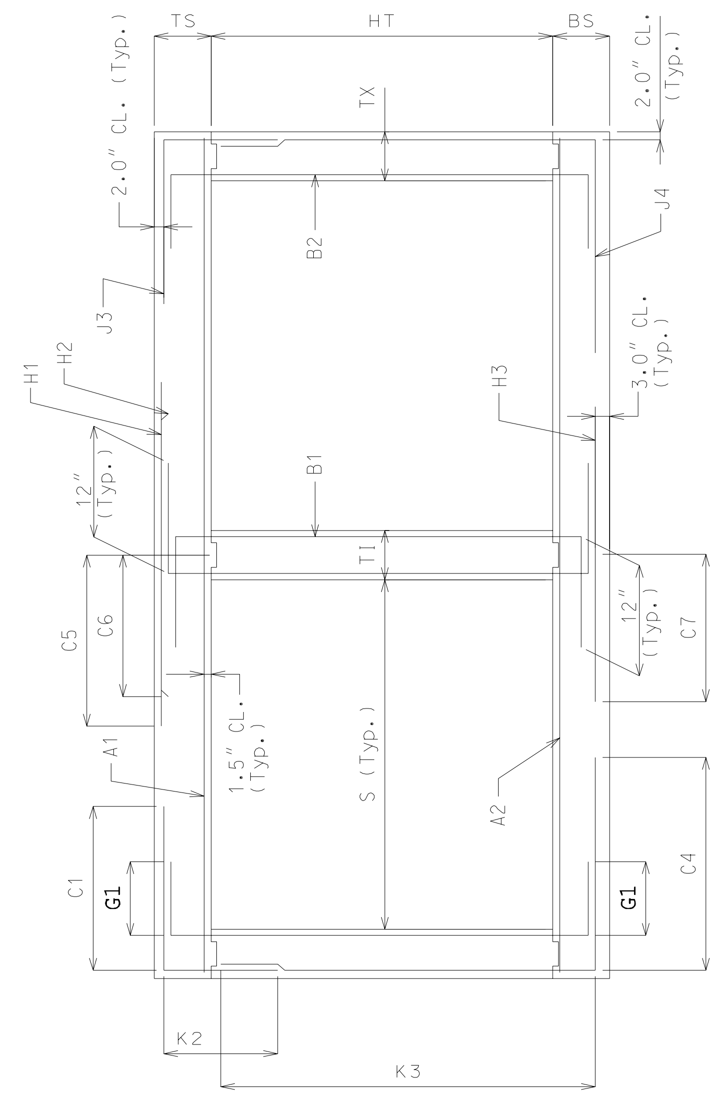

SECTION THRU BOX

NOTE: IF DESIGN FILL FALLS BETWEEN TABULATED FILLS, USE THE ADJACENT TABULATED FILL WHICH YIELDS THE GREATER MEMBER THICKNESS. IF THE MEMBER THICKNESSES ARE EQUAL, USE THE ADJACENT TABULATED FILL WHICH YIELDS THE GREATER AREA OF REINFORCEMENT.

SPECIAL DESIGNS ARE REQUIRED WHEN THE DESIGN FILL IS OUTSIDE THE RANGE OF TABULATED FILLS.

ALL DIMENSIONS ARE IN inch UNLESS OTHERWISE SPECIFIED.

COEFFICIENTS: DIMENSIONS MARKED WITH C# OR K# ARE THE PRODUCT OF THE COEFFICIENT AND ITS ASSOCIATED MULTIPLIER.

DESIGN FILL HEIGHT GIVEN IN THE TABLES IS THE HEIGHT FROM THE TOP OF THE EARTH FILL OR ROADWAY TO THE TOP OF THE TOP SLAB.

ALL CULVERTS MEET STRENGTH REQUIREMENTS FOR MILITARY 24 kips TANDEM AXLE LOADING.

MISSOURI HIGHWAY AND TRANSPORTATION COMMISSION

CONCRETE DOUBLE BOX CULVERT

MEMBER SIZES AND REINFORCEMENT

(HS20 & HS20 MOD. LOADING)

DATE:

EFFECTIVE: 04-01-2002

703.45B

Span (S) = 10 ft
HT (ft) = 7 or 8 or 9

DESIGN FILL		MEMBER THICKNESSES				TOP SLAB BARS								BOTTOM SLAB BARS						WALL BARS							COEFFICIENTS (see note)							"C" Multiplier	"K" Multiplier		
		TS	BS	TX	TI	A1	Bars	J3	Bars	H1	Bars	H2	Bars	A2	Bars	J4	Bars	H3	Bars	B1	Bars	B2 Bars			F	Bars	J4		H3	J3		H1	H2	S = 10 ft	HT = 7 ft	HT = 8 ft	HT = 9 ft
	(ft-in)	Thick	Thick.	Thick	Thick.	Size	c to c	Size	c to c	Size	c to c	Size	c to c	Size	c to c	Size	c to c	Size	c to c	Size	c to c	G1	Size	c to c	Size	c to c	C4	K3	C7	C1	K2	C5	C6	in	in	in	in
HS20	0'-9"	11	12	9	9	5	6.5	4	6.0	5	12.0	5	12.0	5	8.5	6	7.0	6	8.5	5	11.5	12	5	7.0	4	14.0	0.42	0.93	0.50	0.42	0.28	0.80	0.34	129	102	114	126
	2'-5"	10	10	9	9	5	7.0	5	8.0	6	14.0	6	14.0	5	8.5	5	6.0	7	8.0	5	11.5	12	5	11.5	4	14.0	0.34	0.93	0.48	0.43	0.33	0.65	0.31	129	99	111	123
	4'-2"	9	10	9	9	5	9.0	4	6.0	6	16.5	6	16.5	4	6.0	4	6.0	6	7.0	5	11.5	12	5	11.5	4	14.0	0.31	0.94	0.41	0.35	0.27	0.46	0.27	129	98	110	122
	5'-10"	9	10	9	9	4	6.0	4	6.0	6	16.0	6	16.0	5	9.0	4	6.0	6	7.0	5	11.5	12	5	11.5	4	14.0	0.30	0.94	0.39	0.32	0.27	0.42	0.26	129	98	110	122
	7'-5"	9	11	9	9	5	9.0	4	6.0	6	15.0	6	15.0	5	9.0	4	6.0	6	8.0	5	11.5	0	5	11.5	4	14.0	0.29	0.94	0.37	0.30	0.27	0.40	0.26	129	99	111	123
HS20 MOD	0'-8"	12	13	9	9	6	8.0	5	9.0	6	15.0	6	15.0	5	7.0	6	6.5	6	7.5	5	11.5	12	5	6.0	4	14.0	0.41	0.92	0.51	0.42	0.30	0.83	0.39	129	104	116	128
	2'-4"	11	11	9	9	5	6.0	5	7.5	6	12.5	6	12.5	5	7.5	6	8.0	7	7.5	5	11.5	12	5	11.5	4	14.0	0.35	0.92	0.50	0.42	0.33	0.83	0.32	129	101	113	125
	4'-2"	9	10	9	9	5	8.0	5	8.5	6	14.0	6	14.0	5	8.5	5	8.5	6	6.0	5	11.5	12	5	11.5	4	14.0	0.32	0.94	0.41	0.36	0.32	0.48	0.28	129	98	110	122
	5'-10"	9	11	9	9	5	8.5	5	9.0	6	14.5	6	14.5	5	9.0	4	6.0	6	7.5	5	11.5	12	5	11.5	4	14.0	0.30	0.94	0.39	0.32	0.28	0.43	0.26	129	99	111	123
	7'-5"	9	11	9	9	5	8.5	5	9.0	6	14.5	6	14.5	5	8.5	5	9.0	6	7.0	5	11.5	0	5	11.5	4	14.0	0.29	0.94	0.38	0.31	0.28	0.41	0.26	129	99	111	123
HS20 MOD or HS20	9'-0"	10	12	9	9	5	9.0	5	9.0	6	15.0	6	15.0	5	8.5	4	6.0	6	8.0	5	11.5	0	5	11.5	4	14.0	0.28	0.93	0.36	0.29	0.29	0.38	0.25	129	101	113	125
	10'-7"	11	13	9	9	5	9.0	5	8.5	6	15.5	6	15.5	5	9.0	4	6.0	6	8.5	5	11.5	0	5	11.5	4	14.0	0.27	0.93	0.36	0.28	0.29	0.38	0.25	129	103	115	127
	12'-2"	11	13	9	9	5	8.0	5	7.5	6	14.5	6	14.5	5	7.5	5	8.5	6	7.5	5	11.5	0	5	11.5	4	14.0	0.27	0.93	0.36	0.28	0.29	0.38	0.25	129	103	115	127
	13'-9"	12	14	9	9	5	8.5	5	7.5	6	14.5	6	14.5	5	8.0	5	8.0	6	7.5	5	11.5	0	5	11.5	4	14.0	0.27	0.92	0.36	0.27	0.29	0.38	0.25	129	105	117	129
	15'-4"	13	15	9	9	5	8.5	5	7.0	6	15.0	6	15.0	5	8.0	5	7.5	6	8.0	5	11.5	0	5	11.5	4	14.0	0.27	0.91	0.36	0.27	0.30	0.38	0.25	129	107	119	131
	17'-0"	13	15	9	9	5	7.5	5	7.0	6	14.0	6	14.0	5	7.5	5	7.0	6	7.0	5	11.5	0	5	11.5	4	14.0	0.26	0.91	0.36	0.27	0.33	0.38	0.25	129	107	119	131
	18'-6"	14	16	9	9	5	7.5	5	6.5	6	14.0	6	14.0	5	7.5	5	7.0	6	7.0	5	11.5	0	5	11.5	4	14.0	0.26	0.91	0.36	0.26	0.33	0.38	0.25	129	109	121	133
	20'-1"	15	17	10	9	5	8.0	5	7.0	6	14.5	6	14.5	5	7.5	5	7.5	6	7.5	5	11.5	0	5	11.5	4	14.0	0.26	0.90	0.36	0.31	0.34	0.41	0.29	130	111	123	135
	21'-9"	15	17	10	9	5	7.5	5	7.0	6	14.0	6	14.0	5	7.5	5	7.0	6	7.0	5	11.5	0	5	11.5	4	14.0	0.26	0.90	0.36	0.31	0.34	0.41	0.29	130	111	123	135
	23'-3"	16	18	10	9	5	7.5	5	7.0	6	14.0	6	14.0	5	7.5	5	7.0	6	7.0	5	11.5	0	5	11.5	4	14.0	0.26	0.90	0.36	0.30	0.31	0.41	0.29	130	113	125	137
	24'-10"	17	18	11	9	5	7.0	5	7.0	6	13.0	6	13.0	5	7.0	5	7.0	6	7.0	5	11.5	0	5	11.5	4	14.0	0.26	0.90	0.36	0.31	0.31	0.41	0.29	130	114	126	138
	26'-6"	17	19	11	9	5	7.0	5	7.0	6	13.5	6	13.5	5	7.0	5	7.0	6	7.0	5	11.5	0	5	11.5	4	14.0	0.26	0.89	0.36	0.31	0.34	0.41	0.29	130	115	127	139
	28'-0"	18	20	11	9	5	7.0	5	7.0	6	13.5	6	13.5	5	7.0	5	7.0	6	7.0	5	11.5	0	5	11.5	4	14.0	0.26	0.88	0.36	0.31	0.35	0.41	0.29	130	117	129	141
	29'-7"	19	20	12	9	5	7.0	5	7.0	6	13.0	6	13.0	5	7.0	5	7.5	6	6.5	5	11.5	0	5	11.5	4	14.0	0.27	0.88	0.36	0.31	0.35	0.40	0.28	131	118	130	142
	31'-3"	19	21	12	9	5	7.0	5	7.0	6	13.0	6	13.0	5	7.0	5	7.0	6	7.0	5	11.5	0	5	11.5	4	14.0	0.27	0.88	0.35	0.31	0.35	0.40	0.28	131	119	131	143

SPAN (S) = 10 ft
HT (ft) = 10 or 11

DESIGN FILL		MEMBER THICKNESSES				TOP SLAB BARS								BOTTOM SLAB BARS						WALL BARS							COEFFICIENTS (see note)							"C" Multiplier	"K" Multiplier	
		TS	BS	TX	TI	A1	Bars	J3	Bars	H1	Bars	H2	Bars	A2	Bars	J4	Bars	H3	Bars	B1	Bars	B2 Bars			F	Bars	J4		H3	J3		H1	H2	S = 10 ft	HT = 10 ft	HT = 11 ft
	(ft-in)	Thick	Thick.	Thick	Thick.	Size	c to c	Size	c to c	Size	c to c	Size	c to c	Size	c to c	Size	c to c	Size	c to c	Size	c to c	G1	Size	c to c	Size	c to c	C4	K3	C7	C1	K2	C5	C6	in	in	in
HS20	0'-9"	11	10	9	9	5	6.0	5	8.0	6	15.5	6	15.5	5	8.0	6	6.5	6	6.0	5	11.5	12	5	6.0	4	14.0	0.47	0.94	0.46	0.42	0.25	0.83	0.38	129	136	148
	2'-5"	10	11	9	9	5	7.0	5	7.0	6	14.0	6	14.0	5	8.0	6	8.5	7	8.0	5	11.5	12	5	11.5	4	14.0	0.43	0.94	0.47	0.51	0.24	0.83	0.31	129	136	148
	4'-2"	9	10	9	9	5	9.0	5	8.0	6	16.0	6	16.0	5	9.0	5	7.0	6	7.0	5	11.5	12	5	11.5	4	14.0	0.37	0.95	0.40	0.41	0.23	0.46	0.28	129	134	146
	5'-10"	9	11	9	9	4	6.0	5	7.5	6	16.0	6	16.0	4	6.0	5	7.0	6	8.0	5	11.5	12	5	11.5	4	14.0	0.36	0.95	0.38	0.37	0.23	0.42	0.26	129	135	147
	7'-5"	9	11	9	9	5	9.0	5	7.0	6	15.5	6	15.5	5	8.5	5	7.0	6	8.0	5	11.5	0	5	11.5	4	14.0	0.34	0.95	0.37	0.35	0.23	0.40	0.26	129	135	147
HS20 MOD	0'-8"	12	13	9	9	6	8.0	5	7.5	6	14.5	6	14.5	5	7.0	6	6.0	6	7.5	5	11.5	12	5	7.0	4	14.0	0.50	0.93	0.51	0.42	0.25	0.83	0.38	129	140	152
	2'-4"	11	11	9	9	6	8.5	5	6.5	6	12.5	6	12.5	5	7.0	6	7.0	7	7.5	5	11.5	12	5	11.5	4	14.0	0.43	0.94	0.49	0.42	0.24	0.83	0.32	129	137	149
	4'-2"	9	11	9	9	5	7.5	5	7.0	6	14.5	6	14.5	5	8.5	5	7.0	6	6.0	5	11.5	12	5	11.5	4	14.0	0.38	0.95	0.42	0.41	0.23	0.48	0.28	129	135	147
	5'-10"	9	11	9	9	5	8.5	5	7.0	6	14.5	6	14.5	5	8.5	5	7.0	6	7.5	5	11.5	12	5	11.5	4	14.0	0.36	0.95	0.39	0.38	0.23	0.43	0.27	129	135	147
	7'-5"	9	12	9	9	5	8.5	5	7.0	6	14.5	6	14.5	5	8.5	5	7.0	6	7.0	5	11.5	0	5	11.5	4	14.0	0.34	0.95	0.37	0.35	0.23	0.41	0.26	129	136	148
HS20 MOD or HS20	9'-0"	10	12	9	9	5	9.0	5	6.5	6	15.5	6	15.5	5	8.5	5	7.0	6	8.0	5	11.5	0	5	11.5	4	14.0	0.33	0.94	0.36	0.34	0.24	0.38	0.25	129	137	149
	10'-7"	11	13	9	9	5	9.0	5	6.0	6	16.0	6	16.0	5	8.5	5	6.0	6	8.5	5	11.5	0	5	11.5	4	14.0	0.33	0.94	0.36	0.33	0.24	0.38	0.25	129	139	151
	12'-2"	11	13	10	9	5	8.5	5	7.0	6	14.5	6	14.5	5	8.0	5	7.0	6	7.5	5	11.5	0	5	11.5	4	14.0	0.32	0.94	0.36	0.32	0.24	0.38	0.25	130	139	151
	13'-9"	12	14	10	9	5	8.5	5	6.0	6	15.0	6	15.0	5	8.0	5	6.0	6	8.0	5	11.5	0	5	11.5	4	14.0	0.32	0.93	0.36	0.32	0.24	0.38	0.25	130	141	153
	15'-4"	13	15	10	9	5	9.0	5	6.0	6	15.5	6	15.5	5	8.0	5	6.0	6	8.0	5	11.5	0	5	11.0	4	14.0	0.32	0.93	0.36	0.32	0.25	0.38	0.25	130	143	155
	17'-0"	13	15	11	9	5	8.0	5	6.0	6	14.5	6	14.5	5	7.5	5	6.0	6	7.0	5	11.5	0	5	11.5	4	14.0	0.32	0.93	0.35	0.32	0.25	0.38	0.25	130	143	155
	18'-6"	14	16	11	9	5	8.0	5	6.0	6	14.5	6	14.5	5	7.5	5	6.0	6	7.5	5	11.5	0	5	11.0	4	14.0	0.31	0.92	0.35	0.32	0.25	0.37	0.25	130	145	157
	20'-1"	15	17	12	9	5	8.0	5	6.5	6	14.5	6	14.5	5	7.5	5	6.5	6	7.5	5	11.5	0	5	11.5	4	14.0	0.32	0.92	0.35	0.36	0.26	0.41	0.29	131	147	159
	21'-9"	15	17	12	9	5	8.0	5	6.0	6	14.5	6	14.5	5	7.5	5	6.0	6	7.5	5	11.5	0	5	11.0	4	14.0	0.31	0.92	0.35	0.36	0.26	0.41	0.29	131	147	159
	23'-3"	16	18	12	9	5	8.0	6	8.5	6	14.5	6	14.5	5	7.5	6	8.5	6	7.5	5	11.5	0	5	10.5	4	14.0	0.33	0.91	0.35	0.37	0.27	0.40	0.29	131	149	161
	24'-11"	16	18	13	9	5	7.5	5	6.0	6	14.0	6	14.0	5	7.0	5	6.0	6	7.0	5	11.5	0	5	11.0	4	14.0	0.31	0.91	0.35	0.36	0.26	0.40	0.28	131	149	161
	26'-6"	17	19	13	9	5	7.5	6	8.5	6	14.0	6	14.0	5	7.0	5	6.0	6	7.0	5	11.5	0	5	10.5	4	14.0	0.31	0.91	0.35	0.37	0.27	0.40	0.28	131	151	163
	28'-0"	18	20	13	9	5	7.5	6	8.5	6	14.5	6	14.5	5	7.0	6	8.5	6	7.0	5	11.5	0	5	9.5	4	14.0	0.33	0.90	0.35	0.37	0.27	0.40	0.28	131	153	165
	29'-8"	18	20	14	9	5	7.0	5	6.0	6	13.5	6	13.5	5	7.0	5	6.0	6	7.0	5	11.5	0	5	11.0	4	14.0	0.32	0.90	0.34	0.36	0.27	0.40	0.28	132	153	165
	31'-3"	19	21	14	9	5	7.0	6	8.5	6	14.0	6	14.0	5	7.0	6	8.5	6	7.0	5	11.5	0	5	10.0	4	14.0	0.34	0.90	0.34	0.37	0.28	0.40	0.28	132	155	167

SPAN (S) = 10 ft
HT (ft) = 12 or 13

DESIGN FILL		MEMBER THICKNESSES				TOP SLAB BARS								BOTTOM SLAB BARS						WALL BARS							COEFFICIENTS (see note)							"C" Multiplier	"K" Multiplier	
		TS	BS	TX	TI	A1	Bars	J3	Bars	H1	Bars	H2	Bars	A2	Bars	J4	Bars	H3	Bars	B1	Bars	B2 Bars			F	Bars	J4		H3	J3		H1	H2	S = 10 ft	HT = 12 ft	HT = 13 ft
	(ft-in)	Thick	Thick.	Thick	Thick.	Size	c to c	Size	c to c	Size	c to c	Size	c to c	Size	c to c	Size	c to c	Size	c to c	Size	c to c	G1	Size	c to c	Size	c to c	C4	K3	C7	C1	K2	C5	C6	in	in	in
HS20	0'-9"	11	11	10	10	5	6.0	5	7.0	6	16.0	6	16.0	5	8.0	6	6.0	6	6.0	5	11.5	12	5	6.5	4	14.0	0.55	0.95	0.47	0.43	0.21	0.82	0.36	130	161	173
	2'-5"	10	11	10	10	5	7.0	5	7.0	6	14.0	6	14.0	5	7.5	6	7.0	7	7.5	5	11.5	12	5	11.5	4	14.0	0.50	0.95	0.46	0.43	0.20	0.82	0.31	130	160	172
	4'-2"	9	10	10	10	5	9.0	5	7.0	6	16.5	6	16.5	5	8.5	6	8.0	6	7.0	5	11.5	12	5	9.5	4	14.0	0.45	0.96	0.40	0.48	0.20	0.46	0.28	130	158	170
	5'-10"	9	11	10	10	5	9.0	5	7.0	6	16.5	6	16.5	5	9.0	6	9.0	6	8.0	5	11.5	12	5	9.0	4	14.0	0.44	0.96	0.38	0.43	0.20	0.42	0.27	130	159	171
	7'-5"	9	11	10	10	5	9.0	5	6.0	6	15.5	6	15.5	5	8.5	6	8.5	6	7.5	5	11.5	0	5	9.5	4	14.0	0.42	0.96	0.37	0.41	0.20	0.40	0.26	130	159	171
HS20 MOD	0'-8"	12	11	10	10	6	8.0	5	7.0	6	14.0	6	14.0	5	7.0	7	7.5	6	6.0	5	11.5	12	5	6.0	4	14.0	0.58	0.94	0.47	0.43	0.21	0.82	0.39	130	162	174
	2'-4"	11	11	10	10	5	6.0	5	6.0	6	12.5	6	12.5	5	7.0	6	7.0	7	7.5	5	11.5	12	5	11.5	4	14.0	0.50	0.95	0.48	0.43	0.21	0.82	0.32	130	161	173
	4'-2"	9	11	10	10	5	8.0	5	6.5	6	14.5	6	14.5	5	8.5	5	6.0	6	7.0	5	11.5	12	5	9.5	4	14.0	0.44	0.96	0.41	0.49	0.20	0.48	0.28	130	159	171
	5'-10"	9	11	10	10	5	8.5	5	6.5	6	14.5	6	14.5	5	8.5	5	6.0	6	7.0	5	11.5	12	5	10.5	4	14.0	0.42	0.96	0.39	0.43	0.20	0.43	0.27	130	159	171
	7'-5"	9	12	10	10	5	8.5	5	6.0	6	14.5	6	14.5	5	9.0	6	8.5	5	6.0	5	11.5	0	5	9.5	4	14.0	0.43	0.96	0.35	0.41	0.20	0.41	0.26	130	160	172
HS20 MOD or HS20	9'-0"	10	12	10	10	5	9.0	6	8.5	6	16.0	6	16.0	5	8.0	6	8.0	6	8.0	5	11.5	0	5	9.0	4	14.0	0.42	0.95	0.36	0.42	0.21	0.38	0.25	130	161	173
	10'-8"	10	13	11	10	5	8.5	5	6.0	6	14.5	6	14.5	5	8.0	5	6.0	5	6.0	5	11.5	0	5	9.5	4	14.0	0.39	0.95	0.33	0.39	0.20	0.38	0.25	131	162	174
	12'-2"	11	14	11	10	5	8.5	6	8.0	6	14.5	6	14.5	5	7.5	6	8.0	6	7.5	5	11.5	0	5	9.0	4	14.0	0.40	0.95	0.35	0.40	0.23	0.38	0.25	131	164	176
	13'-9"	12	14	12	10	5	9.0	5	6.0	6	15.5	6	15.5	5	8.0	6	8.5	6	8.0	5	11.5	0	5	9.0	4	14.0	0.40	0.94	0.35	0.38	0.21	0.38	0.25	131	165	177
	15'-5"	12	15	12	10	5	8.0	6	8.0	6	14.5	6	14.5	5	8.0	6	8.0	6	8.5	5	11.5	0	5	9.0	4	14.0	0.40	0.94	0.35	0.39	0.24	0.38	0.25	131	166	178
	17'-0"	13	15	12	10	5	8.5	6	7.5	6	14.5	6	14.5	5	7.5	6	7.0	6	7.5	5	11.5	0	5	8.5	4	14.0	0.39	0.94	0.35	0.39	0.22	0.37	0.25	131	167	179
	18'-6"	14	16	13	10	5	8.5	6	8.0	6	15.0	6	15.0	5	7.5	6	7.5	6	7.5	5	11.5	0	5	9.0	4	14.0	0.39	0.93	0.35	0.39	0.24	0.37	0.25	132	169	181
	20'-2"	14	17	13	10	5	8.0	6	7.0	6	14.0	6	14.0	5	7.5	6	7.0	6	8.0	5	11.5	0	5	8.5	4	14.0	0.39	0.93	0.34	0.39	0.24	0.37	0.25	132	170	182
	21'-9"	15	17	14	10	5	8.5	6	8.0	6	15.0	6	15.0	5	7.5	6	7.5	6	7.5	5	11.5	0	5	8.5	4	14.0	0.39	0.93	0.34	0.42	0.25	0.40	0.28	132	171	183
	23'-4"	15	18	14	10	5	8.0	6	7.5	6	14.0	6	14.0	5	7.0	6	7.0	6	8.0	5	11.5	0	5	8.0	4	14.0	0.39	0.93	0.34	0.42	0.24	0.40	0.28	132	172	184
	24'-11"	16	19	15	10	5	8.0	6	8.0	6	14.5	6	14.5	5	7.0	6	8.0	6	7.0	5	11.5	0	5	8.5	4	14.0	0.39	0.92	0.34	0.42	0.25	0.40	0.28	133	174	186
	26'-6"	17	19	15	10	5	8.0	6	7.5	6	14.5	6	14.5	5	7.0	6	7.0	6	7.0	5	11.5	0	5	8.0	4	14.0	0.39	0.92	0.34	0.42	0.25	0.40	0.28	133	175	187
	28'-1"	17	20	16	10	5	7.5	6	7.5	6	13.5	6	13.5	5	7.0	6	7.5	6	7.5	5	11.5	0	5	8.5	4	14.0	0.39	0.92	0.34	0.42	0.25	0.40	0.28	133	176	188
	29'-8"	18	20	16	10	5	7.5	6	7.5	6	14.0	6	14.0	5	7.0	6	7.0	6	7.0	5	11.5	0	5	8.0	4	14.0	0.38	0.92	0.34	0.42	0.25	0.39	0.28	133	177	189
	31'-3"	19	21	16	10	5	7.5	6	7.0	6	14.5	6	14.5	5	7.0	6	7.0	6	7.0	5	11.5	0	5	7.5	4	14.0	0.39	0.91	0.34	0.42	0.26	0.39	0.28	133	179	191

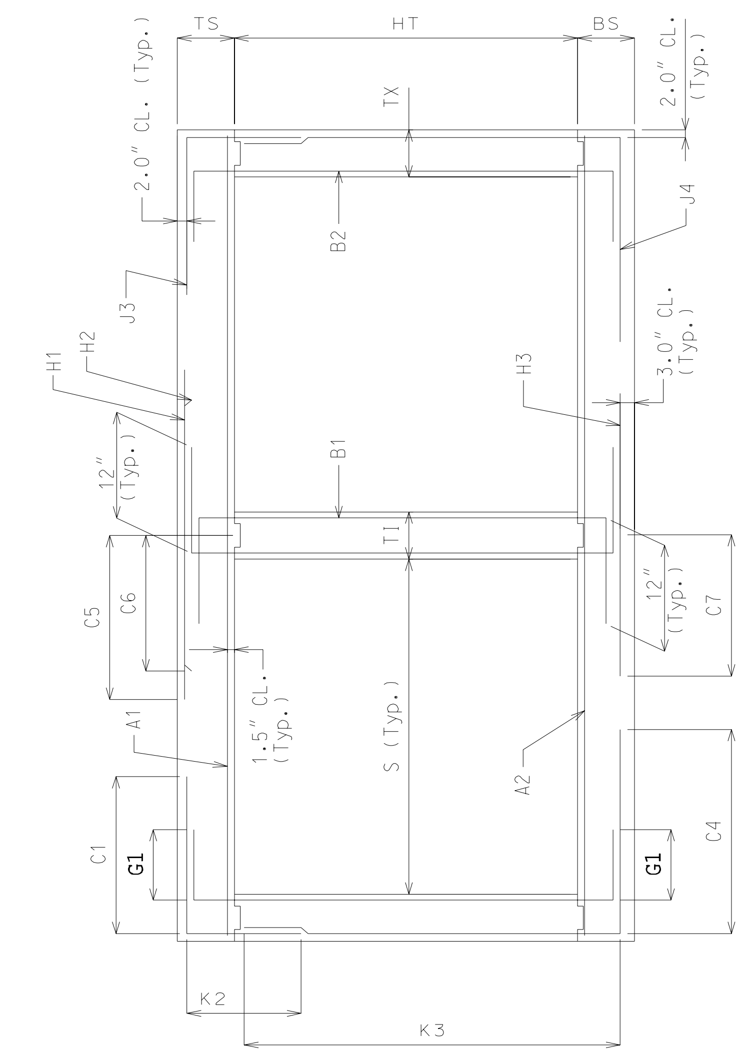

SECTION THRU BOX

NOTE: IF DESIGN FILL FALLS BETWEEN TABULATED FILLS, USE THE ADJACENT TABULATED FILL WHICH YIELDS THE GREATER MEMBER THICKNESS. IF THE MEMBER THICKNESSES ARE EQUAL, USE THE ADJACENT TABULATED FILL WHICH YIELDS THE GREATER AREA OF REINFORCEMENT.

SPECIAL DESIGNS ARE REQUIRED WHEN THE DESIGN FILL IS OUTSIDE THE RANGE OF TABULATED FILLS.

ALL DIMENSIONS ARE IN inch UNLESS OTHERWISE SPECIFIED.

COEFFICIENTS: DIMENSIONS MARKED WITH C# OR K# ARE THE PRODUCT OF THE COEFFICIENT AND ITS ASSOCIATED MULTIPLIER.

DESIGN FILL HEIGHT GIVEN IN THE TABLES IS THE HEIGHT FROM THE TOP OF THE EARTH FILL OR ROADWAY TO THE TOP OF THE TOP SLAB.

ALL CULVERTS MEET STRENGTH REQUIREMENTS FOR MILITARY 24 kips TANDEM AXLE LOADING.

MISSOURI HIGHWAY AND TRANSPORTATION COMMISSION

CONCRETE DOUBLE BOX CULVERT
MEMBER SIZES AND REINFORCEMENT

(HS20 & HS20 MOD. LOADING)

DATE: | EFFECTIVE: 04-01-2002 | 703.45B | 7/13

Span (S) = 11 ft
HT (ft) = 8 or 9 or 10

Loading	DESIGN FILL (ft-in)	TS Thick	BS Thick.	TX Thick	TI Thick.	TOP SLAB BARS A1 Size	A1 Bars c to c	J3 Size	J3 Bars c to c	H1 Size	H1 Bars c to c	H2 Size	H2 Bars c to c	BOTTOM SLAB BARS A2 Size	A2 Bars c to c	J4 Size	J4 Bars c to c	H3 Size	H3 Bars c to c	WALL BARS B1 Size	B1 Bars c to c	B2 Bars G1	B2 Size	B2 c to c	F Size	F Bars c to c	COEFFICIENTS (see note) J4 C4	J4 K3	H3 C7	J3 C1	J3 K2	H1 C5	H2 C6	"C" Multiplier S = 11 ft (in)	"K" Multiplier HT = 8 ft (in)	HT = 9 ft (in)	HT = 10 ft (in)
HS20	0'-9"	11	12	9	9	6	8.5	5	8.0	6	15.0	6	15.0	5	8.0	6	6.5	6	7.0	5	11.5	12	5	7.0	4	14.0	0.41	0.93	0.48	0.41	0.29	0.81	0.34	141	114	126	138
	2'-5"	10	11	9	9	6	8.0	5	7.0	6	12.0	6	12.0	5	7.0	6	8.0	7	7.0	5	11.5	12	5	11.0	4	14.0	0.35	0.94	0.47	0.45	0.29	0.61	0.30	141	112	124	136
	4'-1"	10	10	9	9	5	8.0	5	8.5	6	15.5	6	15.5	5	8.0	5	7.0	7	8.0	5	11.5	12	5	11.5	4	14.0	0.31	0.94	0.42	0.35	0.26	0.45	0.27	141	111	123	135
	5'-9"	10	11	9	9	5	8.0	5	8.0	6	15.0	6	15.0	5	8.0	5	7.5	7	9.0	5	11.5	12	5	11.5	4	14.0	0.30	0.94	0.41	0.31	0.29	0.41	0.25	141	112	124	136
	7'-4"	10	12	9	9	5	8.0	5	7.5	6	14.5	6	14.5	5	8.0	5	7.5	6	7.0	5	11.5	0	5	11.5	4	14.0	0.29	0.94	0.37	0.30	0.29	0.40	0.25	141	113	125	137
HS20 MOD	0'-8"	12	13	9	9	6	7.5	5	7.5	6	13.5	6	13.5	5	7.0	7	7.5	6	7.0	5	11.5	12	6	8.0	4	14.0	0.44	0.93	0.50	0.41	0.30	0.81	0.37	141	116	128	140
	2'-3"	12	11	9	9	6	7.5	5	7.0	6	12.0	6	12.0	5	7.0	6	7.0	7	6.5	5	11.5	12	5	11.5	4	14.0	0.35	0.93	0.48	0.41	0.30	0.81	0.31	141	114	126	138
	4'-1"	10	11	9	9	5	7.0	5	7.0	6	13.5	6	13.5	5	8.0	5	7.0	6	6.0	5	11.5	12	5	11.5	4	14.0	0.31	0.94	0.41	0.36	0.29	0.48	0.27	141	112	124	136
	5'-9"	10	11	9	9	5	7.5	5	7.0	6	13.5	6	13.5	5	7.5	5	7.0	6	6.0	5	11.5	12	5	11.5	4	14.0	0.30	0.94	0.39	0.31	0.29	0.42	0.26	141	112	124	136
	7'-4"	10	12	9	9	5	7.5	5	7.0	6	13.5	6	13.5	5	7.5	5	7.0	6	7.0	5	11.5	0	5	11.5	4	14.0	0.29	0.94	0.37	0.30	0.29	0.40	0.25	141	113	125	137
HS20 or HS20 MOD	8'-11"	11	13	9	9	5	8.0	5	7.0	6	14.5	6	14.5	5	8.0	5	7.5	6	7.0	5	11.5	0	5	11.5	4	14.0	0.28	0.93	0.36	0.28	0.29	0.38	0.24	141	115	127	139
	10'-7"	11	14	9	9	5	7.0	5	7.0	6	12.5	6	12.5	5	7.0	5	7.0	6	7.0	5	11.5	0	5	11.5	4	14.0	0.27	0.93	0.35	0.28	0.29	0.37	0.24	141	116	128	140
	12'-1"	12	14	9	9	5	7.5	5	6.5	6	12.5	6	12.5	5	7.0	5	7.0	6	7.0	5	11.5	0	5	11.5	4	14.0	0.27	0.93	0.35	0.27	0.29	0.37	0.24	141	117	129	141
	13'-8"	13	15	9	9	5	7.5	5	6.0	6	13.0	6	13.0	5	7.0	5	6.5	6	7.0	5	11.5	0	5	11.5	4	14.0	0.26	0.92	0.35	0.26	0.30	0.37	0.24	141	119	131	143
	15'-3"	14	16	10	9	5	7.5	5	7.0	6	13.5	6	13.5	5	7.0	5	7.0	6	7.0	5	11.5	0	5	11.5	4	14.0	0.26	0.92	0.35	0.27	0.30	0.37	0.24	142	121	133	145
	16'-10"	15	17	10	9	5	7.0	5	6.0	6	12.5	6	12.5	5	7.0	5	7.0	6	6.5	5	11.5	0	5	11.5	4	14.0	0.26	0.92	0.36	0.27	0.31	0.40	0.27	142	123	135	147
	18'-5"	15	17	10	9	5	7.0	5	6.0	6	12.5	6	12.5	5	7.0	5	6.0	6	6.5	5	11.5	0	5	11.5	4	14.0	0.26	0.91	0.35	0.30	0.30	0.40	0.27	142	123	135	147
	20'-0"	16	18	11	9	5	7.0	5	6.5	6	12.5	6	12.5	5	7.0	5	7.0	6	6.5	5	11.5	0	5	11.5	4	14.0	0.26	0.90	0.35	0.30	0.31	0.40	0.27	142	125	137	149
	21'-7"	17	19	11	9	5	7.0	5	6.5	6	12.5	6	12.5	5	7.0	5	7.0	6	6.5	5	11.5	0	5	11.5	4	14.0	0.26	0.90	0.35	0.30	0.31	0.40	0.27	142	127	139	151
	23'-2"	17	19	11	9	5	7.0	5	6.0	6	12.5	6	12.5	5	6.5	5	6.0	6	6.0	5	11.5	0	5	11.5	4	14.0	0.26	0.90	0.35	0.30	0.31	0.40	0.27	142	127	139	151
	24'-9"	18	20	12	9	5	7.0	5	6.5	6	12.5	6	12.5	5	6.5	5	7.0	6	6.5	5	11.5	0	5	11.5	4	14.0	0.26	0.89	0.35	0.30	0.31	0.39	0.27	143	129	141	153
	26'-4"	19	21	12	9	5	7.0	5	6.0	6	12.0	6	12.0	5	6.5	5	7.0	6	6.5	5	11.5	0	5	11.5	4	14.0	0.26	0.89	0.34	0.30	0.32	0.39	0.27	143	131	143	155
	27'-11"	19	21	12	9	5	6.5	5	6.0	6	12.0	6	12.0	5	6.0	5	6.0	6	6.0	5	11.5	0	5	11.5	4	14.0	0.26	0.89	0.34	0.30	0.32	0.39	0.27	143	131	143	155
	29'-6"	20	22	13	9	5	6.5	5	6.5	6	12.0	6	12.0	5	6.0	5	7.0	6	6.0	5	11.5	0	5	11.5	4	14.0	0.26	0.88	0.34	0.30	0.32	0.39	0.27	143	133	145	157
	31'-1"	21	23	13	9	5	6.5	5	6.0	6	12.5	6	12.5	5	6.0	5	6.5	6	6.0	5	11.5	0	5	11.0	4	14.0	0.26	0.88	0.34	0.30	0.32	0.39	0.27	143	135	147	159

SPAN (S) = 11 ft
HT (ft) = 11 or 12

Loading	DESIGN FILL (ft-in)	TS Thick	BS Thick.	TX Thick	TI Thick.	TOP SLAB BARS A1 Size	A1 Bars c to c	J3 Size	J3 Bars c to c	H1 Size	H1 Bars c to c	H2 Size	H2 Bars c to c	BOTTOM SLAB BARS A2 Size	A2 Bars c to c	J4 Size	J4 Bars c to c	H3 Size	H3 Bars c to c	WALL BARS B1 Size	B1 Bars c to c	B2 Bars G1	B2 Size	B2 c to c	F Size	F Bars c to c	COEFFICIENTS (see note) J4 C4	J4 K3	H3 C7	J3 C1	J3 K2	H1 C5	H2 C6	"C" Multiplier S = 11 ft (in)	"K" Multiplier HT = 11 ft (in)	HT = 12 ft (in)
HS20	0'-9"	11	12	10	10	6	8.0	5	7.0	6	15.0	6	15.0	5	7.5	6	6.0	6	7.0	5	11.5	12	5	7.0	4	14.0	0.48	0.94	0.48	0.42	0.22	0.81	0.34	142	150	162
	2'-5"	10	11	10	10	6	8.0	5	6.5	6	12.0	6	12.0	5	7.0	6	7.0	7	7.5	5	11.5	12	5	11.5	4	14.0	0.41	0.95	0.47	0.42	0.22	0.81	0.29	142	148	160
	4'-1"	10	11	10	10	5	8.0	5	7.0	6	15.0	6	15.0	5	7.5	5	6.5	7	7.5	5	11.5	12	5	11.5	4	14.0	0.37	0.95	0.42	0.40	0.22	0.46	0.27	142	148	160
	5'-9"	10	11	10	10	5	8.5	5	7.0	6	15.0	6	15.0	5	8.0	5	7.0	7	9.0	5	11.5	12	5	11.5	4	14.0	0.35	0.95	0.41	0.37	0.22	0.41	0.26	142	148	160
	7'-4"	10	12	10	10	5	8.0	5	7.0	6	14.5	6	14.5	5	8.0	5	6.5	6	7.0	5	11.5	0	5	11.5	4	14.0	0.34	0.95	0.36	0.35	0.22	0.40	0.25	142	149	161
HS20 MOD	0'-8"	12	13	10	10	6	7.0	5	7.0	6	13.5	6	13.5	5	7.0	7	7.5	6	6.5	5	11.5	12	5	6.0	4	14.0	0.51	0.94	0.50	0.42	0.23	0.81	0.36	142	152	164
	2'-3"	12	12	10	10	6	8.0	5	6.5	6	12.0	6	12.0	5	7.0	6	7.0	7	7.0	5	11.5	12	5	11.5	4	14.0	0.42	0.94	0.48	0.42	0.23	0.81	0.31	142	151	163
	4'-1"	10	11	10	10	5	7.0	5	7.0	6	13.0	6	13.0	5	7.5	5	6.0	7	8.0	5	11.5	12	5	11.5	4	14.0	0.37	0.95	0.43	0.41	0.22	0.48	0.27	142	148	160
	5'-9"	10	12	10	10	5	7.5	5	7.0	6	13.5	6	13.5	5	8.0	5	6.5	6	7.0	5	11.5	12	5	11.5	4	14.0	0.35	0.95	0.39	0.37	0.22	0.43	0.26	142	149	161
	7'-4"	10	12	10	10	5	7.5	5	6.5	6	13.0	6	13.0	5	7.5	5	6.0	6	7.0	5	11.5	0	5	11.5	4	14.0	0.34	0.95	0.37	0.35	0.22	0.40	0.25	142	149	161
HS20 or HS20 MOD	8'-11"	11	13	10	10	5	8.0	5	6.0	6	14.5	6	14.5	5	7.5	5	6.0	6	7.0	5	11.5	0	5	11.5	4	14.0	0.33	0.94	0.36	0.33	0.22	0.38	0.24	142	151	163
	10'-7"	11	14	10	10	5	7.5	6	8.0	6	12.5	6	12.5	5	7.5	6	8.5	6	7.5	5	11.5	0	5	11.5	4	14.0	0.34	0.94	0.35	0.34	0.25	0.37	0.24	142	152	164
	12'-1"	12	14	10	10	5	7.5	6	8.0	6	13.0	6	13.0	5	7.0	6	7.5	6	7.0	5	11.5	0	5	11.0	4	14.0	0.33	0.94	0.35	0.33	0.24	0.37	0.24	142	153	165
	13'-8"	13	15	11	10	5	7.5	6	8.5	6	13.5	6	13.5	5	7.0	6	8.5	6	7.0	5	11.5	0	5	11.0	4	14.0	0.33	0.93	0.35	0.33	0.24	0.37	0.24	143	155	167
	15'-3"	14	16	11	10	5	7.0	6	8.0	6	12.5	6	12.5	5	7.0	6	8.0	6	7.0	5	11.5	0	5	10.5	4	14.0	0.33	0.93	0.35	0.33	0.26	0.37	0.24	143	157	169
	16'-11"	14	17	12	10	5	7.0	6	8.5	6	12.5	6	12.5	5	7.0	6	8.5	6	7.0	5	11.5	0	5	11.0	4	14.0	0.33	0.93	0.34	0.33	0.24	0.37	0.24	143	158	170
	18'-5"	15	17	12	10	5	7.0	6	8.0	6	12.5	6	12.5	5	7.0	6	8.0	6	6.5	5	11.5	0	5	10.5	4	14.0	0.32	0.92	0.34	0.36	0.26	0.40	0.27	143	159	171
	20'-0"	16	18	12	10	5	7.0	6	7.5	6	13.0	6	13.0	5	7.0	6	7.5	6	6.5	5	11.5	0	5	9.5	4	14.0	0.32	0.92	0.34	0.36	0.25	0.40	0.27	143	161	173
	21'-7"	17	19	13	10	5	7.0	6	8.0	6	12.5	6	12.5	5	6.5	6	8.0	6	7.0	5	11.5	0	5	10.5	4	14.0	0.32	0.92	0.34	0.36	0.25	0.39	0.27	144	163	175
	23'-2"	17	20	13	10	5	7.0	6	7.5	6	12.5	6	12.5	5	6.5	6	8.0	6	7.0	5	11.5	0	5	9.0	4	14.0	0.32	0.91	0.34	0.36	0.27	0.39	0.27	144	164	176
	24'-9"	18	20	14	10	5	7.0	6	8.0	6	13.0	6	13.0	5	6.5	6	8.0	6	6.5	5	11.5	0	5	10.0	4	14.0	0.32	0.91	0.34	0.36	0.25	0.39	0.27	144	165	177
	26'-5"	18	21	14	10	5	7.0	6	7.5	6	12.0	6	12.0	5	6.5	6	8.0	6	7.0	5	11.5	0	5	9.0	4	14.0	0.32	0.91	0.33	0.36	0.27	0.39	0.27	144	166	178
	27'-11"	19	21	14	10	5	7.0	6	7.0	6	12.5	6	12.5	5	6.0	6	7.0	6	6.0	5	11.5	0	5	9.0	4	14.0	0.32	0.90	0.34	0.36	0.28	0.39	0.27	144	167	179
	29'-6"	20	22	15	10	5	7.0	6	8.0	6	12.5	6	12.5	5	6.0	6	8.0	6	6.5	5	11.5	0	5	9.0	4	14.0	0.32	0.90	0.33	0.36	0.28	0.38	0.27	145	169	181
	31'-2"	20	23	15	10	5	6.5	6	7.0	6	12.0	6	12.0	5	6.0	6	7.5	6	6.5	5	11.5	0	5	9.0	4	14.0	0.32	0.90	0.33	0.36	0.28	0.38	0.27	145	170	182

SPAN (S) = 11 ft
HT (ft) = 13 or 14

Loading	DESIGN FILL (ft-in)	TS Thick	BS Thick.	TX Thick	TI Thick.	TOP SLAB BARS A1 Size	A1 Bars c to c	J3 Size	J3 Bars c to c	H1 Size	H1 Bars c to c	H2 Size	H2 Bars c to c	BOTTOM SLAB BARS A2 Size	A2 Bars c to c	J4 Size	J4 Bars c to c	H3 Size	H3 Bars c to c	WALL BARS B1 Size	B1 Bars c to c	B2 Bars G1	B2 Size	B2 c to c	F Size	F Bars c to c	COEFFICIENTS (see note) J4 C4	J4 K3	H3 C7	J3 C1	J3 K2	H1 C5	H2 C6	"C" Multiplier S = 11 ft (in)	"K" Multiplier HT = 13 ft (in)	HT = 14 ft (in)
HS20	0'-8"	12	12	11	11	5	6.0	5	7.0	6	16.0	6	16.0	5	8.0	6	6.0	6	7.0	5	11.5	12	5	7.5	4	14.0	0.53	0.95	0.46	0.42	0.20	0.81	0.35	143	175	187
	2'-5"	10	11	11	11	6	8.5	5	6.0	6	12.5	6	12.5	5	7.0	6	6.5	7	7.5	5	11.5	12	5	11.0	4	14.0	0.47	0.96	0.46	0.42	0.19	0.81	0.29	143	172	184
	4'-1"	10	11	11	11	5	8.5	5	7.0	6	15.0	6	15.0	5	8.0	6	7.0	6	6.5	5	11.5	12	5	10.5	4	14.0	0.44	0.96	0.42	0.47	0.19	0.46	0.27	143	172	184
	5'-9"	10	11	11	11	5	8.5	5	6.5	6	15.0	6	15.0	5	7.5	6	7.0	7	9.0	5	11.5	12	5	9.5	4	14.0	0.42	0.96	0.40	0.42	0.19	0.41	0.26	143	172	184
	7'-4"	10	12	11	11	5	8.5	5	6.0	6	14.5	6	14.5	5	7.5	6	8.0	6	7.0	5	11.5	0	5	9.0	4	14.0	0.41	0.96	0.36	0.40	0.19	0.40	0.25	143	173	185
HS20 MOD	0'-6"	14	13	11	11	6	7.0	5	6.5	6	13.5	6	13.5	5	7.0	7	7.0	6	6.5	5	11.5	12	5	6.5	4	14.0	0.55	0.94	0.49	0.42	0.20	0.81	0.38	143	178	190
	2'-3"	12	12	11	11	6	8.0	6	8.5	6	12.0	6	12.0	5	7.0	6	6.5	7	7.0	5	11.5	12	5	11.5	4	14.0	0.48	0.95	0.47	0.44	0.22	0.81	0.31	143	175	187
	4'-1"	10	11	11	11	5	7.0	5	6.0	6	13.0	6	13.0	5	7.0	6	7.0	6	6.0	5	11.5	12	5	10.5	4	14.0	0.44	0.96	0.40	0.48	0.19	0.48	0.27	143	172	184
	5'-9"	10	12	11	11	5	7.5	5	6.0	6	13.5	6	13.5	5	7.5	6	8.0	6	7.0	5	11.5	12	5	9.5	4	14.0	0.42	0.96	0.38	0.43	0.19	0.42	0.26	143	173	185
	7'-4"	10	12	11	11	5	7.5	6	8.5	6	13.5	6	13.5	5	7.0	6	8.0	6	6.5	5	11.5	0	5	9.0	4	14.0	0.41	0.96	0.37	0.42	0.21	0.40	0.25	143	173	185
HS20 or HS20 MOD	8'-11"	11	13	11	11	5	8.0	6	8.0	6	14.5	6	14.5	5	7.0	6	7.5	6	7.0	5	11.5	0	5	9.0	4	14.0	0.40	0.95	0.35	0.40	0.22	0.38	0.24	143	175	187
	10'-7"	11	14	11	11	5	7.5	6	7.0	6	13.0	6	13.0	5	7.0	6	7.0	6	7.5	5	11.5	0	5	8.0	4	14.0	0.40	0.95	0.34	0.39	0.22	0.37	0.24	143	176	188
	12'-1"	12	15	12	11	5	7.5	6	8.0	6	13.5	6	13.5	5	7.0	6	7.0	6	7.0	5	11.5	0	5	8.5	4	14.0	0.39	0.95	0.34	0.39	0.22	0.37	0.24	144	178	190
	13'-8"	13	15	12	11	5	8.0	6	7.0	6	14.0	6	14.0	5	7.0	6	7.0	6	7.0	5	11.5	0	5	8.0	4	14.0	0.38	0.94	0.34	0.38	0.22	0.37	0.24	144	179	191
	15'-4"	13	16	13	11	5	7.0	6	7.5	6	12.5	6	12.5	5	7.0	6	7.0	6	7.0	5	11.5	0	5	8.5	4	14.0	0.38	0.94	0.34	0.38	0.22	0.37	0.24	144	180	192
	16'-11"	14	17	13	11	5	7.5	6	7.0	6	12.5	6	12.5	5	7.0	6	7.0	6	7.0	5	11.5	0	5	7.5	4	14.0	0.38	0.94	0.34	0.38	0.23	0.36	0.24	144	182	194
	18'-5"	15	17	14	11	5	7.5	6	7.0	6	13.0	6	13.0	5	7.0	6	7.0	6	6.5	5	11.5	0	5	8.0	4	14.0	0.37	0.93	0.34	0.41	0.23	0.39	0.27	145	183	195
	20'-0"	16	18	14	11	5	7.5	6	7.0	6	13.0	6	13.0	5	7.0	6	7.0	6	7.0	5	11.5	0	5	7.5	4	14.0	0.37	0.93	0.34	0.41	0.23	0.39	0.27	145	185	197
	21'-8"	16	19	15	11	5	7.0	6	7.0	6	12.5	6	12.5	5	6.5	6	7.0	6	7.0	5	11.5	0	5	8.0	4	14.0	0.37	0.93	0.33	0.41	0.23	0.39	0.27	145	186	198
	23'-2"	17	20	15	11	5	7.0	6	7.0	6	12.5	6	12.5	5	6.5	6	7.0	6	7.0	5	11.5	0	5	7.0	4	14.0	0.37	0.92	0.33	0.41	0.23	0.39	0.27	145	188	200
	24'-10"	17	20	16	11	5	7.0	6	7.0	6	12.5	6	12.5	5	6.5	6	7.0	6	7.0	5	11.5	0	5	7.5	4	14.0	0.37	0.92	0.33	0.41	0.23	0.39	0.27	146	188	200
	26'-5"	18	21	16	11	5	7.0	6	7.0	6	12.5	6	12.5	5	6.5	6	7.0	6	7.0	5	11.5	0	5	7.0	4	14.0	0.37	0.92	0.33	0.40	0.24	0.39	0.27	146	190	202
	27'-11"	19	21	17	11	5	7.0	6	7.0	6	12.5	6	12.5	5	6.0	6	7.0	6	6.5	5	11.5	0	5	7.5	4	14.0	0.37	0.92	0.33	0.41	0.24	0.38	0.27	146	191	203
	29'-6"	20	22	17	11	5	7.0	6	7.0	6	12.5	6	12.5	5	6.0	6	7.0	6	6.5	5	11.5	0	5	7.0	4	14.0	0.37	0.92	0.33	0.40	0.24	0.38	0.27	146	193	205
	31'-2"	20	23	17	11	5	6.5	6	6.5	6	12.5	6	12.5	5	6.0	6	6.5	6	6.5	5	11.5	0	5	7.0	4	14.0	0.37	0.91	0.32	0.40	0.24	0.38	0.27	146	194	206

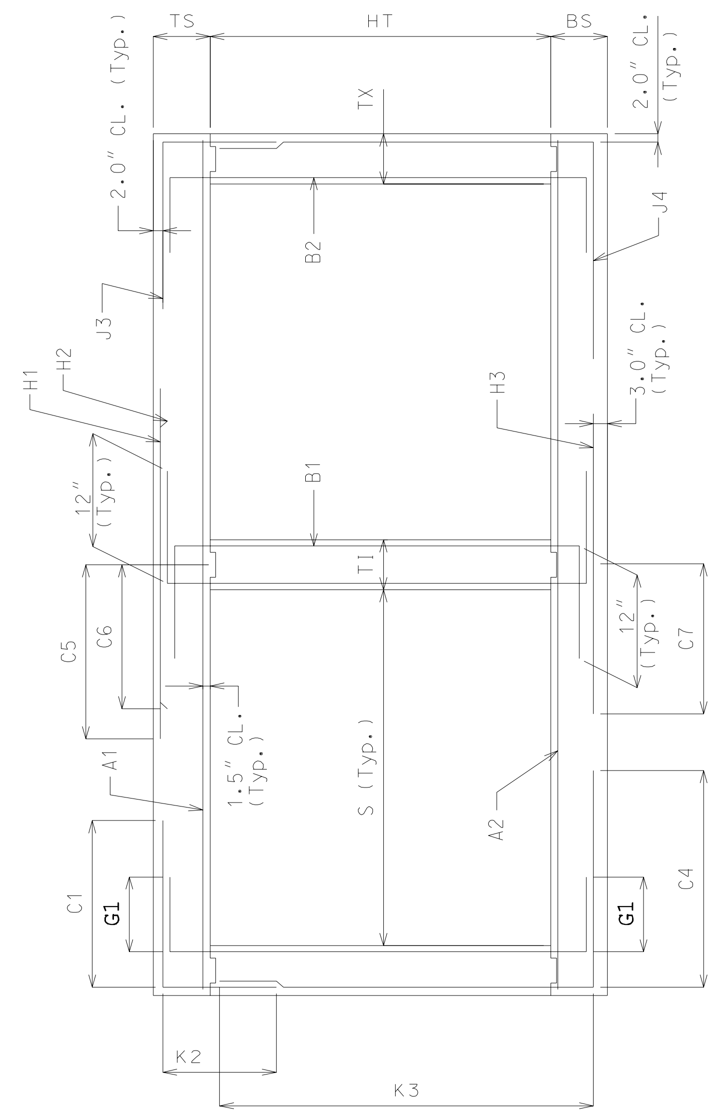

SECTION THRU BOX

NOTE: IF DESIGN FILL FALLS BETWEEN TABULATED FILLS, USE THE ADJACENT TABULATED FILL WHICH YIELDS THE GREATER MEMBER THICKNESS. IF THE MEMBER THICKNESSES ARE EQUAL, USE THE ADJACENT TABULATED FILL WHICH YIELDS THE GREATER AREA OF REINFORCEMENT.

SPECIAL DESIGNS ARE REQUIRED WHEN THE DESIGN FILL IS OUTSIDE THE RANGE OF TABULATED FILLS.

ALL DIMENSIONS ARE IN inch UNLESS OTHERWISE SPECIFIED.

COEFFICIENTS: DIMENSIONS MARKED WITH C# OR K# ARE THE PRODUCT OF THE COEFFICIENT AND ITS ASSOCIATED MULTIPLIER.

DESIGN FILL HEIGHT GIVEN IN THE TABLES IS THE HEIGHT FROM THE TOP OF THE EARTH FILL OR ROADWAY TO THE TOP OF THE TOP SLAB.

ALL CULVERTS MEET STRENGTH REQUIREMENTS FOR MILITARY 24 kips TANDEM AXLE LOADING.

MISSOURI HIGHWAY AND TRANSPORTATION COMMISSION

CONCRETE DOUBLE BOX CULVERT

MEMBER SIZES AND REINFORCEMENT

(HS20 & HS20 MOD. LOADING)

DATE: | EFFECTIVE: 04-01-2002 | **703.45B** | 8/13

Span (S) = 12 ft; HT (ft) = 9 or 10 or 11

Loading	DESIGN FILL (ft-in)	TS Thick	BS Thick.	TX Thick	TI Thick.	TOP SLAB BARS A1 Size	A1 Bars c to c	J3 Size	J3 Bars c to c	H1 Size	H1 Bars c to c	H2 Size	H2 Bars c to c	BOTTOM SLAB BARS A2 Size	A2 Bars c to c	J4 Size	J4 Bars c to c	H3 Size	H3 Bars c to c	WALL BARS B1 Size	B1 Bars c to c	G1	B2 Bars Size	B2 Bars c to c	F Size	F Bars c to c	COEFFICIENTS (see note) J4 C4	J4 K3	H3 C7	J3 C1	J3 K2	H1 C5	H2 C6	"C" Multiplier S = 12 ft (in)	"K" Multiplier HT = 9 ft (in)	HT = 10 ft (in)	HT = 11 ft (in)
HS20	0'-8"	12	12	9	9	6	8.5	5	7.0	6	14.5	6	14.5	5	7.5	7	8.0	6	6.5	5	11.5	12	5	7.0	4	14.0	0.44	0.93	0.46	0.40	0.27	0.81	0.34	153	127	139	151
	2'-4"	11	11	9	9	6	7.5	5	6.0	7	16.0	7	16.0	5	7.0	6	7.0	7	7.0	5	11.5	12	5	11.5	4	14.0	0.35	0.94	0.45	0.48	0.27	0.70	0.31	153	125	137	149
	4'-1"	10	11	9	9	5	7.0	5	7.0	6	13.0	6	13.0	5	7.5	5	6.0	7	8.0	5	11.5	12	5	11.5	4	14.0	0.31	0.94	0.41	0.34	0.26	0.45	0.26	153	124	136	148
	5'-9"	10	12	9	9	5	7.0	5	6.5	6	12.5	6	12.5	5	7.0	5	6.5	7	7.5	5	11.5	12	5	11.5	4	14.0	0.29	0.94	0.40	0.31	0.26	0.40	0.24	153	125	137	149
	7'-4"	10	12	9	9	5	7.0	5	6.0	6	12.0	6	12.0	5	7.0	5	6.0	6	6.0	5	11.5	0	5	11.5	4	14.0	0.28	0.94	0.36	0.29	0.26	0.39	0.24	153	125	137	149
HS20 MOD	0'-6"	14	13	9	9	6	7.0	5	7.0	6	13.0	6	13.0	5	7.0	7	7.0	6	6.0	5	11.5	12	6	8.0	4	14.0	0.43	0.92	0.47	0.40	0.27	0.81	0.38	153	130	142	154
	2'-3"	12	12	9	9	6	7.0	6	8.0	7	14.5	7	14.5	5	6.0	6	6.0	7	6.5	5	11.5	12	5	11.5	4	14.0	0.35	0.93	0.47	0.42	0.27	0.83	0.33	153	127	139	151
	4'-1"	10	11	9	9	5	6.0	5	6.0	7	15.5	7	15.5	5	7.0	6	8.0	7	7.0	5	11.5	12	5	11.5	4	14.0	0.32	0.94	0.42	0.35	0.26	0.49	0.29	153	124	136	148
	5'-9"	10	12	9	9	5	6.5	5	6.0	7	15.0	7	15.0	5	7.0	5	6.0	7	8.0	5	11.5	12	5	11.5	4	14.0	0.29	0.94	0.40	0.31	0.26	0.44	0.27	153	125	137	149
	7'-3"	11	13	9	9	5	7.0	5	6.0	6	12.5	6	12.5	5	7.0	5	6.0	6	6.0	5	11.5	0	5	11.5	4	14.0	0.28	0.94	0.36	0.29	0.26	0.40	0.24	153	127	139	151
HS20 or HS20 MOD	8'-11"	11	14	9	9	5	7.0	6	8.0	7	16.0	7	16.0	5	6.5	5	6.5	7	8.0	5	11.5	0	5	11.5	4	14.0	0.27	0.94	0.38	0.30	0.26	0.40	0.26	153	128	140	152
	10'-6"	12	14	9	9	5	7.0	6	8.0	7	16.5	7	16.5	5	6.5	6	8.5	6	6.0	5	11.5	0	5	11.5	4	14.0	0.28	0.93	0.34	0.28	0.27	0.39	0.26	153	129	141	153
	12'-0"	13	15	10	9	5	7.0	5	6.0	7	16.5	7	16.5	5	6.5	5	6.0	6	6.0	5	11.5	0	5	11.5	4	14.0	0.27	0.93	0.34	0.27	0.27	0.39	0.26	154	131	143	155
	13'-7"	14	16	10	9	5	7.0	6	8.5	6	12.0	6	12.0	5	6.5	5	6.0	6	6.0	5	11.5	0	5	11.5	4	14.0	0.26	0.92	0.34	0.28	0.27	0.39	0.26	154	133	145	157
	15'-2"	15	17	10	9	5	7.0	6	8.0	6	12.0	6	12.0	5	6.5	6	8.0	6	6.0	5	11.5	0	5	11.5	4	14.0	0.27	0.92	0.34	0.31	0.28	0.42	0.29	154	135	147	159
	16'-9"	16	18	11	9	5	6.5	6	8.5	7	15.5	7	15.5	5	6.5	5	6.0	6	6.0	5	11.5	0	5	11.5	4	14.0	0.26	0.92	0.34	0.31	0.28	0.42	0.29	154	137	149	161
	18'-4"	16	19	11	9	5	6.5	6	8.0	7	15.5	7	15.5	5	6.0	5	6.0	7	8.0	5	11.5	0	5	11.5	4	14.0	0.25	0.91	0.37	0.31	0.29	0.42	0.29	154	138	150	162
	19'-11"	17	19	12	9	5	6.5	5	6.0	7	15.5	7	15.5	5	6.0	5	6.0	7	8.0	5	11.5	0	5	11.5	4	14.0	0.26	0.91	0.37	0.29	0.28	0.42	0.29	155	139	151	163
	21'-6"	18	20	12	9	5	6.5	6	8.5	7	15.5	7	15.5	5	6.0	6	8.5	7	8.0	5	11.5	0	5	11.5	4	14.0	0.27	0.90	0.37	0.31	0.29	0.42	0.29	155	141	153	165
	23'-0"	19	21	12	9	5	6.0	6	8.0	7	15.5	7	15.5	5	6.0	6	8.5	7	8.0	5	11.5	0	5	11.0	4	14.0	0.27	0.90	0.37	0.31	0.29	0.42	0.29	155	143	155	167
	24'-7"	20	22	13	9	5	6.0	6	8.5	7	16.0	7	16.0	5	6.0	5	6.0	7	8.0	5	11.5	0	5	11.5	4	14.0	0.26	0.89	0.36	0.31	0.29	0.41	0.29	155	145	157	169
	26'-3"	20	22	13	9	5	6.0	6	8.0	7	15.0	7	15.0	6	8.5	6	8.5	7	7.5	5	11.5	0	5	11.0	4	14.0	0.27	0.89	0.36	0.31	0.29	0.41	0.29	155	145	157	169
	27'-9"	21	23	13	9	5	6.0	6	8.0	7	15.5	7	15.5	6	8.5	6	8.0	7	8.0	5	11.5	0	5	10.0	4	14.0	0.27	0.89	0.36	0.31	0.30	0.41	0.29	155	147	159	171
	29'-4"	22	24	14	9	5	6.0	6	8.0	7	14.5	7	14.5	6	8.0	5	6.0	7	8.0	5	11.5	0	5	11.0	4	14.0	0.26	0.89	0.36	0.31	0.30	0.41	0.29	156	149	161	173
	31'-0"	22	25	14	9	6	8.5	6	8.0	7	14.5	7	14.5	6	7.5	5	6.0	7	7.5	5	11.5	0	5	10.5	4	14.0	0.26	0.88	0.36	0.31	0.30	0.41	0.29	156	150	162	174

SPAN (S) = 12 ft; HT (ft) = 12 or 13

Loading	DESIGN FILL (ft-in)	TS Thick	BS Thick.	TX Thick	TI Thick.	TOP SLAB BARS A1 Size	A1 Bars c to c	J3 Size	J3 Bars c to c	H1 Size	H1 Bars c to c	H2 Size	H2 Bars c to c	BOTTOM SLAB BARS A2 Size	A2 Bars c to c	J4 Size	J4 Bars c to c	H3 Size	H3 Bars c to c	WALL BARS B1 Size	B1 Bars c to c	G1	B2 Bars Size	B2 Bars c to c	F Size	F Bars c to c	COEFFICIENTS (see note) J4 C4	J4 K3	H3 C7	J3 C1	J3 K2	H1 C5	H2 C6	"C" Multiplier S = 12 ft (in)	"K" Multiplier HT = 12 ft (in)	HT = 13 ft (in)
HS20	0'-8"	12	12	10	10	6	8.5	5	7.0	6	14.5	6	14.5	5	7.5	7	8.0	6	6.5	5	11.5	12	5	7.0	4	14.0	0.50	0.94	0.45	0.41	0.21	0.80	0.33	154	163	175
	2'-4"	11	11	10	10	6	7.5	6	8.5	7	16.0	7	16.0	5	6.5	6	6.5	7	6.5	5	11.5	12	5	11.5	4	14.0	0.41	0.95	0.44	0.50	0.22	0.83	0.31	154	161	173
	4'-1"	10	11	10	10	5	7.0	5	6.0	6	13.0	6	13.0	5	7.0	6	8.0	7	7.5	5	11.5	12	5	11.5	4	14.0	0.38	0.95	0.41	0.40	0.20	0.44	0.26	154	160	172
	5'-9"	10	12	10	10	5	7.0	5	6.0	6	12.5	6	12.5	5	7.0	6	8.0	7	8.5	5	11.5	12	5	11.0	4	14.0	0.36	0.95	0.39	0.36	0.20	0.40	0.24	154	161	173
	7'-4"	10	13	10	10	5	7.0	6	8.0	7	16.0	7	16.0	5	7.0	6	7.5	6	6.0	5	11.5	0	5	11.0	4	14.0	0.35	0.95	0.35	0.36	0.21	0.42	0.26	154	162	174
HS20 MOD	0'-6"	14	13	10	10	6	7.5	5	6.5	6	13.5	6	13.5	5	7.0	7	7.0	6	6.0	5	11.5	12	5	6.0	4	14.0	0.50	0.93	0.46	0.41	0.22	0.80	0.37	154	166	178
	2'-3"	12	12	10	10	6	7.0	6	7.5	7	14.5	7	14.5	5	6.0	7	7.5	7	6.5	5	11.5	12	5	11.5	4	14.0	0.44	0.94	0.46	0.42	0.24	0.83	0.33	154	163	175
	4'-1"	10	12	10	10	5	6.0	6	8.5	7	15.5	7	15.5	5	7.0	6	7.5	7	7.0	5	11.5	12	5	11.5	4	14.0	0.38	0.95	0.42	0.42	0.21	0.49	0.29	154	161	173
	5'-9"	10	12	10	10	5	6.5	6	8.0	7	15.5	7	15.5	5	7.0	6	7.5	7	7.5	5	11.5	12	5	11.0	4	14.0	0.36	0.95	0.40	0.38	0.21	0.44	0.27	154	161	173
	7'-3"	11	13	10	10	5	7.0	6	8.0	6	12.5	6	12.5	5	7.0	6	7.5	6	6.0	5	11.5	0	5	11.0	4	14.0	0.35	0.95	0.36	0.36	0.22	0.39	0.24	154	163	175
HS20 or HS20 MOD	8'-11"	11	14	10	10	5	7.0	6	7.0	7	16.0	7	16.0	5	7.0	6	7.5	6	7.0	5	11.5	0	5	10.0	4	14.0	0.34	0.95	0.34	0.34	0.23	0.39	0.26	154	164	176
	10'-6"	12	15	11	10	5	7.0	6	8.0	6	12.0	6	12.0	5	6.5	6	8.0	6	6.0	5	11.5	0	5	11.0	4	14.0	0.33	0.94	0.34	0.33	0.24	0.36	0.23	155	166	178
	12'-0"	13	15	11	10	5	7.0	6	7.5	6	12.0	6	12.0	5	6.5	6	7.0	6	6.0	5	11.5	0	5	10.0	4	14.0	0.32	0.94	0.34	0.33	0.24	0.36	0.23	155	167	179
	13'-7"	14	16	12	10	5	7.0	6	8.0	6	12.5	6	12.5	5	6.5	6	8.0	6	6.0	5	11.5	0	5	10.5	4	14.0	0.32	0.93	0.34	0.32	0.24	0.36	0.23	155	169	181
	15'-2"	15	17	12	10	5	7.0	6	7.5	6	12.5	6	12.5	5	6.5	6	7.0	6	6.5	5	11.5	0	5	9.5	4	14.0	0.32	0.93	0.34	0.35	0.25	0.39	0.26	155	171	183
	16'-10"	15	18	12	10	5	6.5	6	7.0	7	15.5	7	15.5	5	6.5	6	7.0	6	6.5	5	11.5	0	5	9.0	4	14.0	0.32	0.93	0.33	0.35	0.24	0.42	0.29	155	172	184
	18'-4"	16	19	13	10	5	6.5	6	7.0	7	16.0	7	16.0	5	6.5	6	7.0	6	6.5	5	11.5	0	5	9.0	4	14.0	0.32	0.92	0.33	0.35	0.25	0.42	0.29	156	174	186
	19'-11"	17	19	13	10	5	6.5	6	7.0	7	16.0	7	16.0	5	6.0	6	7.0	6	6.0	5	11.5	0	5	9.0	4	14.0	0.31	0.92	0.33	0.35	0.25	0.42	0.29	156	175	187
	21'-6"	18	20	14	10	5	6.5	6	7.0	7	16.0	7	16.0	5	6.0	6	7.0	6	6.0	5	11.5	0	5	9.0	4	14.0	0.32	0.92	0.33	0.35	0.25	0.41	0.29	156	177	189
	23'-0"	19	21	14	10	5	6.5	6	7.0	6	12.0	6	12.0	5	6.0	6	7.0	6	6.0	5	11.5	0	5	8.5	4	14.0	0.32	0.91	0.33	0.35	0.26	0.38	0.26	156	179	191
	24'-8"	19	22	15	10	5	6.0	6	7.0	7	15.0	7	15.0	6	8.5	6	7.0	6	6.0	5	11.5	0	5	9.0	4	14.0	0.32	0.91	0.33	0.35	0.26	0.41	0.29	157	180	192
	26'-3"	20	22	15	10	5	6.5	6	7.0	7	16.0	7	16.0	6	8.5	6	7.0	7	8.0	5	11.5	0	5	8.5	4	14.0	0.32	0.91	0.35	0.35	0.26	0.41	0.29	157	181	193
	27'-9"	21	23	15	10	5	6.0	6	7.0	7	16.0	7	16.0	6	8.5	6	7.0	7	8.0	5	11.5	0	5	8.0	4	14.0	0.31	0.90	0.35	0.35	0.26	0.41	0.29	157	183	195
	29'-5"	21	24	16	10	5	6.0	6	7.0	7	15.0	7	15.0	6	8.0	6	7.0	7	8.0	5	11.5	0	5	8.5	4	14.0	0.32	0.90	0.35	0.35	0.26	0.40	0.29	157	184	196
	31'-0"	22	25	16	10	5	6.0	6	7.0	7	15.0	7	15.0	6	8.0	6	7.0	7	8.0	5	11.5	0	5	8.0	4	14.0	0.31	0.90	0.35	0.35	0.26	0.40	0.29	157	186	198

SPAN (S) = 12 ft; HT (ft) = 14 or 15

Loading	DESIGN FILL (ft-in)	TS Thick	BS Thick.	TX Thick	TI Thick.	TOP SLAB BARS A1 Size	A1 Bars c to c	J3 Size	J3 Bars c to c	H1 Size	H1 Bars c to c	H2 Size	H2 Bars c to c	BOTTOM SLAB BARS A2 Size	A2 Bars c to c	J4 Size	J4 Bars c to c	H3 Size	H3 Bars c to c	WALL BARS B1 Size	B1 Bars c to c	G1	B2 Size	B2 Bars c to c	F Size	F Bars c to c	COEFFICIENTS (see note) J4 C4	J4 K3	H3 C7	J3 C1	J3 K2	H1 C5	H2 C6	"C" Multiplier S = 12 ft (in)	"K" Multiplier HT = 14 ft (in)	HT = 15 ft (in)
HS20	0'-8"	12	11	11	11	6	8.0	5	6.0	6	14.0	6	14.0	5	7.0	7	6.5	7	7.0	5	11.5	12	5	7.0	4	14.0	0.54	0.95	0.45	0.41	0.19	0.80	0.33	155	186	198
	2'-4"	11	12	11	11	6	8.0	6	8.0	6	12.0	6	12.0	5	6.5	6	6.0	7	6.5	5	11.5	12	5	10.0	4	14.0	0.48	0.95	0.45	0.43	0.21	0.80	0.28	155	186	198
	4'-1"	10	11	11	11	5	7.0	6	8.0	6	13.0	6	13.0	5	7.0	6	6.0	7	7.5	5	11.5	12	5	8.5	4	14.0	0.43	0.96	0.40	0.48	0.19	0.44	0.26	155	184	196
	5'-9"	10	12	11	11	5	7.0	6	7.5	6	12.5	6	12.5	5	7.0	6	7.0	6	6.0	5	11.5	12	5	8.0	4	14.0	0.41	0.96	0.36	0.43	0.19	0.40	0.24	155	185	197
	7'-4"	10	13	11	11	5	7.0	6	7.0	6	12.0	6	12.0	5	7.0	6	7.0	6	7.0	5	11.5	0	5	7.5	4	14.0	0.40	0.96	0.35	0.41	0.20	0.39	0.24	155	186	198
HS20 MOD	0'-6"	14	13	11	11	6	7.5	6	8.5	6	13.5	6	13.5	5	7.0	7	7.0	7	8.0	5	11.5	12	5	6.0	4	14.0	0.56	0.94	0.47	0.43	0.20	0.80	0.36	155	190	202
	2'-2"	13	13	11	11	6	7.0	6	7.0	7	14.5	7	14.5	5	6.0	7	7.5	7	6.5	5	11.5	12	5	10.5	4	14.0	0.51	0.95	0.46	0.43	0.21	0.83	0.34	155	189	201
	3'-11"	12	12	11	11	5	7.0	6	7.5	7	15.5	7	15.5	5	7.0	6	7.0	7	7.5	5	11.5	12	5	8.5	4	14.0	0.44	0.96	0.42	0.49	0.19	0.49	0.29	155	187	199
	5'-9"	10	12	11	11	5	6.5	6	7.0	7	15.5	7	15.5	5	6.5	6	7.0	7	7.5	5	11.5	12	5	8.0	4	14.0	0.41	0.96	0.40	0.43	0.20	0.44	0.27	155	185	197
	7'-3"	11	13	11	11	5	7.0	6	7.0	6	12.5	6	12.5	5	6.5	6	6.5	6	6.0	5	11.5	0	5	8.0	4	14.0	0.40	0.95	0.36	0.41	0.20	0.39	0.24	155	187	199
HS20 or HS20 MOD	8'-11"	11	14	12	11	5	7.0	6	7.5	6	12.0	6	12.0	5	7.0	6	7.0	6	7.0	5	11.5	0	5	8.5	4	14.0	0.39	0.95	0.34	0.39	0.20	0.37	0.23	156	188	200
	10'-6"	12	15	12	11	5	7.0	6	7.0	6	12.0	6	12.0	5	7.0	6	7.0	6	7.0	5	11.5	0	5	7.5	4	14.0	0.39	0.95	0.34	0.38	0.21	0.36	0.23	156	190	202
	12'-0"	13	16	13	11	5	7.0	6	7.0	6	12.5	6	12.5	5	6.5	6	7.0	6	6.0	5	11.5	0	5	8.0	4	14.0	0.38	0.95	0.34	0.38	0.21	0.36	0.23	156	192	204
	13'-7"	14	16	13	11	5	7.0	6	7.0	6	12.5	6	12.5	5	6.5	6	6.5	6	6.0	5	11.5	0	5	7.5	4	14.0	0.37	0.94	0.34	0.37	0.21	0.36	0.23	156	193	205
	15'-3"	14	17	14	11	5	7.0	6	7.0	7	16.0	7	16.0	5	6.5	6	7.0	6	6.5	5	11.5	0	5	7.5	4	14.0	0.37	0.94	0.33	0.37	0.21	0.38	0.26	157	194	206
	16'-10"	15	18	14	11	5	7.0	6	7.0	7	16.0	7	16.0	5	6.0	6	6.5	6	6.5	5	11.5	0	5	7.0	4	14.0	0.37	0.94	0.33	0.40	0.22	0.42	0.29	157	196	208
	18'-4"	16	19	15	11	5	7.0	6	7.0	7	16.0	7	16.0	5	6.0	6	6.5	6	6.5	5	11.5	0	5	7.5	4	14.0	0.36	0.93	0.33	0.40	0.22	0.42	0.29	157	198	210
	19'-11"	17	20	15	11	5	7.0	6	6.5	6	12.0	6	12.0	5	6.0	6	6.0	6	6.5	5	11.5	0	5	7.0	4	14.0	0.36	0.93	0.33	0.39	0.22	0.38	0.26	157	200	212
	21'-6"	18	20	16	11	5	6.5	6	7.0	6	12.0	6	12.0	5	6.0	6	6.5	6	6.0	5	11.5	0	5	7.0	4	14.0	0.36	0.93	0.33	0.39	0.22	0.38	0.26	158	201	213
	23'-1"	18	21	16	11	5	6.5	6	6.5	7	15.5	7	15.5	6	8.5	6	6.0	6	6.0	5	11.5	0	5	7.0	4	14.0	0.36	0.93	0.32	0.39	0.22	0.41	0.29	158	202	214
	24'-8"	19	22	17	11	5	6.5	6	6.5	7	15.5	7	15.5	6	8.5	6	6.5	6	6.0	5	11.5	0	5	7.0	4	14.0	0.36	0.92	0.32	0.39	0.23	0.41	0.29	158	204	216
	26'-3"	20	22	17	11	5	6.5	6	6.5	6	12.0	6	12.0	6	8.5	6	6.0	7	8.0	5	11.5	0	5	7.0	4	14.0	0.36	0.92	0.35	0.39	0.23	0.37	0.26	158	205	217
	27'-10"	20	23	18	11	5	6.0	6	6.5	7	15.0	7	15.0	6	8.0	6	6.5	6	6.0	5	11.5	0	5	7.0	4	14.0	0.36	0.92	0.32	0.39	0.23	0.40	0.29	159	206	218
	29'-5"	21	24	18	11	5	6.0	6	6.0	7	15.5	7	15.5	6	8.0	6	6.0	6	6.0	5	11.5	0	5	7.0	4	14.0	0.36	0.91	0.32	0.39	0.23	0.40	0.29	159	208	220
	31'-0"	22	25	19	11	5	6.0	6	6.5	7	15.5	7	15.5	6	8.0	6	6.0	6	6.0	5	11.5	0	5	7.0	4	14.0	0.36	0.91	0.32	0.39	0.23	0.40	0.29	159	210	222

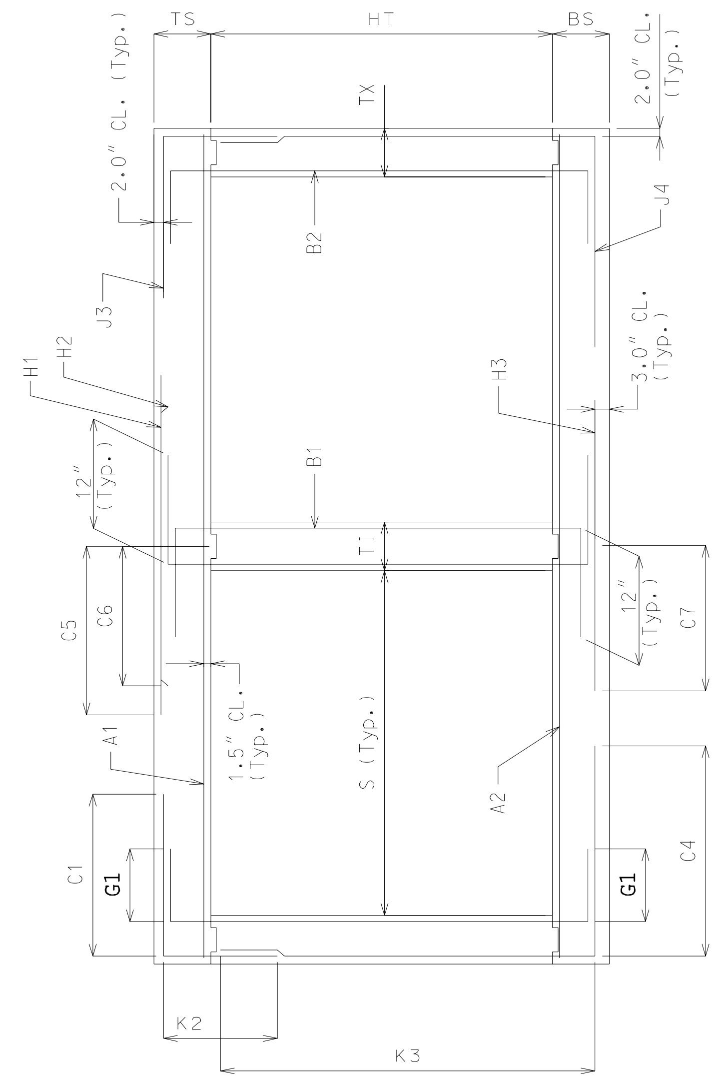

SECTION THRU BOX

NOTE: IF DESIGN FILL FALLS BETWEEN TABULATED FILLS, USE THE ADJACENT TABULATED FILL WHICH YIELDS THE GREATER MEMBER THICKNESS. IF THE MEMBER THICKNESSES ARE EQUAL, USE THE ADJACENT TABULATED FILL WHICH YIELDS THE GREATER AREA OF REINFORCEMENT.

SPECIAL DESIGNS ARE REQUIRED WHEN THE DESIGN FILL IS OUTSIDE THE RANGE OF TABULATED FILLS.

ALL DIMENSIONS ARE IN inch UNLESS OTHERWISE SPECIFIED.

COEFFICIENTS: DIMENSIONS MARKED WITH C# OR K# ARE THE PRODUCT OF THE COEFFICIENT AND ITS ASSOCIATED MULTIPLIER.

DESIGN FILL HEIGHT GIVEN IN THE TABLES IS THE HEIGHT FROM THE TOP OF THE EARTH FILL OR ROADWAY TO THE TOP OF THE TOP SLAB.

ALL CULVERTS MEET STRENGTH REQUIREMENTS FOR MILITARY 24 kips TANDEM AXLE LOADING.

MISSOURI HIGHWAY AND TRANSPORTATION COMMISSION

CONCRETE DOUBLE BOX CULVERT MEMBER SIZES AND REINFORCEMENT

(HS20 & HS20 MOD. LOADING)

DATE: EFFECTIVE: 04-01-2002

703.45B

Span (S) = 13 ft — HT (ft) = 10 or 11 or 12

Loading	DESIGN FILL (ft-in)	TS Thick	BS Thick.	TX Thick	TI Thick.	A1 Size	A1 Bars c to c	J3 Size	J3 Bars c to c	H1 Size	H1 Bars c to c	H2 Size	H2 Bars c to c	A2 Size	A2 Bars c to c	J4 Size	J4 Bars c to c	H3 Size	H3 Bars c to c	B1 Size	B1 Bars c to c	G1	B2 Size	B2 Bars c to c	F Size	F Bars c to c	J4 C4	J4 K3	H3 C7	J3 C1	J3 K2	H1 C5	H2 C6	"C" Multiplier S = 13 ft (in)	"K" Multiplier HT = 10 ft (in)	HT = 11 ft (in)	HT = 12 ft (in)
HS20	0'-8"	12	12	10	10	6	7.5	5	7.0	6	13.5	6	13.5	5	7.0	7	7.0	7	8.0	5	11.5	12	5	6.0	4	14.0	0.43	0.94	0.47	0.40	0.25	0.80	0.32	166	139	151	163
	2'-4"	11	12	10	10	6	7.0	6	8.0	7	14.0	7	14.0	5	6.0	7	8.0	8	7.5	5	11.5	12	5	11.0	4	14.0	0.35	0.94	0.48	0.46	0.28	0.62	0.31	166	138	150	162
	4'-0"	11	11	10	10	5	6.5	5	6.5	6	12.5	6	12.5	5	7.0	6	8.0	7	6.5	5	11.5	12	5	11.5	4	14.0	0.32	0.94	0.40	0.35	0.24	0.45	0.25	166	137	149	161
	5'-8"	11	12	10	10	5	7.0	5	6.0	6	12.0	6	12.0	5	6.5	5	6.0	7	7.0	5	11.5	12	5	11.5	4	14.0	0.29	0.94	0.39	0.31	0.24	0.40	0.24	166	138	150	162
	7'-3"	11	13	10	10	5	6.5	6	8.5	7	15.0	7	15.0	5	6.5	6	8.5	7	7.5	5	11.5	0	5	11.5	4	14.0	0.30	0.94	0.38	0.29	0.25	0.41	0.25	166	139	151	163
HS20 MOD	0'-6"	14	13	10	10	6	7.0	5	6.0	6	12.5	6	12.5	5	6.5	7	7.0	7	7.5	5	11.5	12	6	7.0	4	14.0	0.43	0.93	0.48	0.40	0.25	0.80	0.36	166	142	154	166
	2'-2"	13	13	10	10	6	6.5	6	8.0	7	14.0	7	14.0	5	6.0	7	7.5	7	6.0	5	11.5	12	5	11.0	4	14.0	0.38	0.93	0.46	0.42	0.28	0.82	0.33	166	141	153	165
	4'-0"	11	12	10	10	6	8.0	6	8.5	7	15.0	7	15.0	5	6.5	6	7.5	7	7.0	5	11.5	12	5	11.5	4	14.0	0.32	0.94	0.41	0.35	0.25	0.49	0.28	166	138	150	162
	5'-8"	11	13	10	10	5	6.0	6	8.5	7	14.5	7	14.5	5	6.5	6	8.5	7	7.5	5	11.5	12	5	11.5	4	14.0	0.31	0.94	0.40	0.33	0.25	0.43	0.26	166	139	151	163
	7'-3"	11	13	10	10	5	6.0	6	8.0	7	14.5	7	14.5	5	6.0	6	8.0	7	7.0	5	11.5	0	5	11.5	4	14.0	0.30	0.94	0.38	0.31	0.25	0.41	0.26	166	139	151	163
HS20 MOD or HS20	8'-10"	12	14	10	10	5	6.0	6	8.0	7	15.0	7	15.0	5	6.0	6	8.5	7	7.0	5	11.5	0	5	11.5	4	14.0	0.29	0.94	0.37	0.29	0.25	0.39	0.25	166	141	153	165
	10'-5"	13	15	10	10	5	6.5	6	7.5	7	15.0	7	15.0	5	6.0	6	8.0	7	7.5	5	11.5	0	5	11.5	4	14.0	0.28	0.93	0.37	0.28	0.26	0.38	0.25	166	143	155	167
	11'-11"	14	16	10	10	5	6.5	6	7.0	7	15.0	7	15.0	5	6.0	6	7.0	7	7.5	5	11.5	0	5	11.5	4	14.0	0.28	0.93	0.36	0.28	0.26	0.38	0.25	166	145	157	169
	13'-6"	15	17	11	10	5	6.5	6	8.0	7	15.0	7	15.0	5	6.0	6	8.0	7	7.5	5	11.5	0	5	11.5	4	14.0	0.28	0.92	0.36	0.31	0.29	0.41	0.28	167	147	159	171
	15'-1"	16	18	11	10	5	6.5	6	7.5	7	15.0	7	15.0	5	6.0	6	7.5	7	7.5	5	11.5	0	5	11.0	4	14.0	0.27	0.92	0.36	0.30	0.27	0.41	0.28	167	149	161	173
	16'-8"	17	19	12	10	5	6.0	6	8.0	7	15.0	7	15.0	6	8.5	6	8.0	7	7.5	5	11.5	0	5	11.5	4	14.0	0.27	0.91	0.36	0.30	0.27	0.41	0.28	167	151	163	175
	18'-2"	18	20	12	10	5	6.0	6	7.0	7	14.5	7	14.5	6	8.5	6	8.0	7	7.5	5	11.5	0	5	11.0	4	14.0	0.27	0.91	0.36	0.30	0.27	0.41	0.28	167	153	165	177
	19'-10"	18	21	12	10	6	8.5	6	7.0	7	14.0	7	14.0	6	8.0	6	7.5	7	7.5	5	11.5	0	5	10.0	4	14.0	0.27	0.91	0.35	0.30	0.27	0.41	0.28	167	154	166	178
	21'-5"	19	22	13	10	6	8.5	6	7.5	7	14.0	7	14.0	6	8.0	6	8.0	7	7.5	5	11.5	0	5	11.0	4	14.0	0.27	0.90	0.35	0.30	0.27	0.41	0.28	168	156	168	180
	22'-11"	20	22	13	10	6	8.0	6	7.0	7	14.0	7	14.0	6	7.5	6	7.0	7	7.0	5	11.5	0	5	10.0	4	14.0	0.27	0.90	0.36	0.30	0.30	0.40	0.28	168	157	169	181
	24'-6"	21	23	14	10	6	8.0	6	7.5	7	14.0	7	14.0	6	7.5	6	8.0	7	7.0	5	11.5	0	5	11.0	4	14.0	0.27	0.90	0.35	0.30	0.28	0.40	0.28	168	159	171	183
	26'-1"	22	24	14	10	6	8.0	6	7.5	7	14.0	7	14.0	6	7.5	6	7.5	7	7.0	5	11.5	0	5	9.5	4	14.0	0.27	0.89	0.35	0.30	0.28	0.40	0.28	168	161	173	185
	27'-8"	22	25	14	10	6	8.0	6	7.0	7	13.5	7	13.5	6	7.5	6	7.5	7	7.0	5	11.5	0	5	9.0	4	14.0	0.27	0.89	0.35	0.30	0.30	0.40	0.28	168	162	174	186
	29'-3"	23	25	15	10	6	7.5	6	7.5	7	13.5	7	13.5	6	7.0	6	7.5	7	7.0	5	11.5	0	5	10.0	4	14.0	0.27	0.89	0.35	0.30	0.29	0.40	0.27	169	163	175	187
	30'-10"	24	26	15	10	6	7.5	6	7.0	7	14.0	7	14.0	6	7.0	6	7.0	7	7.0	5	11.5	0	5	9.0	4	14.0	0.27	0.88	0.35	0.30	0.29	0.40	0.27	169	165	177	189

SPAN (S) = 13 ft — HT (ft) = 13 or 14

Loading	DESIGN FILL (ft-in)	TS Thick	BS Thick.	TX Thick	TI Thick.	A1 Size	A1 Bars c to c	J3 Size	J3 Bars c to c	H1 Size	H1 Bars c to c	H2 Size	H2 Bars c to c	A2 Size	A2 Bars c to c	J4 Size	J4 Bars c to c	H3 Size	H3 Bars c to c	B1 Size	B1 Bars c to c	G1	B2 Size	B2 Bars c to c	F Size	F Bars c to c	J4 C4	J4 K3	H3 C7	J3 C1	J3 K2	H1 C5	H2 C6	"C" Multiplier S = 13 ft (in)	"K" Multiplier HT = 13 ft (in)	HT = 14 ft (in)
HS20	0'-8"	12	11	11	11	6	7.5	5	6.0	6	13.0	6	13.0	5	7.0	7	7.0	7	7.0	5	11.5	12	5	6.0	4	14.0	0.47	0.95	0.45	0.40	0.20	0.80	0.32	167	174	186
	2'-4"	11	12	11	11	6	7.0	6	7.5	7	14.5	7	14.5	5	6.5	6	6.0	7	7.0	5	11.5	12	5	11.5	4	14.0	0.40	0.95	0.44	0.52	0.22	0.82	0.30	167	174	186
	4'-0"	11	12	11	11	5	6.5	5	6.0	6	12.5	6	12.5	5	7.0	6	7.0	7	7.5	5	11.5	12	5	11.5	4	14.0	0.37	0.95	0.40	0.40	0.19	0.45	0.25	167	174	186
	5'-8"	11	12	11	11	5	7.0	6	8.0	6	12.0	6	12.0	5	6.5	6	7.0	7	7.0	5	11.5	12	5	11.0	4	14.0	0.35	0.95	0.39	0.38	0.22	0.40	0.24	167	174	186
	7'-3"	11	13	11	11	5	6.5	6	7.5	7	15.0	7	15.0	5	6.0	6	7.0	7	7.5	5	11.5	0	5	10.5	4	14.0	0.34	0.95	0.37	0.35	0.22	0.41	0.26	167	175	187
HS20 MOD	0'-6"	14	13	11	11	6	7.0	5	6.0	6	12.5	6	12.5	5	6.5	7	7.0	7	7.5	5	11.5	12	6	8.0	4	14.0	0.48	0.94	0.47	0.40	0.21	0.80	0.36	167	178	190
	2'-2"	13	13	11	11	6	6.5	6	7.5	7	14.0	7	14.0	6	8.5	7	7.5	7	6.5	5	11.5	12	5	11.5	4	14.0	0.43	0.94	0.45	0.42	0.23	0.82	0.32	167	177	189
	4'-0"	11	12	11	11	6	8.5	6	8.0	7	15.0	7	15.0	5	6.5	6	7.0	7	7.0	5	11.5	12	5	11.5	4	14.0	0.37	0.95	0.41	0.42	0.22	0.49	0.28	167	174	186
	5'-8"	11	13	11	11	5	6.0	6	7.5	7	15.0	7	15.0	5	6.5	6	7.0	7	7.5	5	11.5	12	5	11.0	4	14.0	0.36	0.95	0.40	0.38	0.22	0.44	0.27	167	175	187
	7'-3"	11	14	11	11	5	6.0	6	7.0	7	14.5	7	14.5	5	6.5	6	7.0	7	8.0	5	11.5	0	5	10.5	4	14.0	0.34	0.95	0.38	0.35	0.22	0.41	0.26	167	176	188
HS20 MOD or HS20	8'-10"	12	15	11	11	5	6.5	6	7.0	7	15.0	7	15.0	5	6.0	6	6.0	7	7.0	5	11.5	0	5	9.5	4	14.0	0.33	0.95	0.37	0.34	0.22	0.39	0.25	167	178	190
	10'-5"	13	15	11	11	5	6.5	6	7.0	7	15.5	7	15.5	5	6.0	6	6.5	7	7.5	5	11.5	0	5	9.0	4	14.0	0.32	0.94	0.36	0.32	0.22	0.38	0.25	167	179	191
	11'-11"	14	16	12	11	5	6.5	6	7.0	7	15.5	7	15.5	5	6.0	6	7.0	7	7.5	5	11.5	0	5	9.0	4	14.0	0.32	0.94	0.36	0.32	0.23	0.38	0.25	168	181	193
	13'-6"	15	17	12	11	5	6.5	6	7.0	7	15.5	7	15.5	6	8.5	6	6.5	7	7.5	5	11.5	0	5	9.0	4	14.0	0.31	0.93	0.36	0.34	0.23	0.41	0.28	168	183	195
	15'-1"	16	18	13	11	5	6.5	6	7.0	7	15.5	7	15.5	6	8.5	6	7.0	7	7.5	5	11.5	0	5	9.0	4	14.0	0.31	0.93	0.35	0.34	0.23	0.41	0.28	168	185	197
	16'-8"	17	19	13	11	5	6.0	6	6.5	7	14.5	7	14.5	6	8.5	6	6.5	7	7.5	5	11.5	0	5	8.5	4	14.0	0.31	0.93	0.35	0.34	0.24	0.41	0.28	168	187	199
	18'-3"	17	20	14	11	5	6.0	6	7.0	7	14.5	7	14.5	6	8.0	6	7.0	7	8.0	5	11.5	0	5	9.0	4	14.0	0.31	0.92	0.35	0.34	0.23	0.41	0.28	169	188	200
	19'-10"	18	21	14	11	5	6.0	6	6.5	7	14.5	7	14.5	6	8.0	6	6.5	7	8.0	5	11.5	0	5	8.5	4	14.0	0.31	0.92	0.35	0.34	0.24	0.40	0.28	169	190	202
	21'-5"	19	22	15	11	5	6.0	6	7.0	7	14.5	7	14.5	6	8.0	6	7.0	7	7.5	5	11.5	0	5	8.5	4	14.0	0.31	0.92	0.35	0.34	0.24	0.40	0.28	169	192	204
	22'-11"	20	23	15	11	6	8.5	6	6.5	7	14.5	7	14.5	6	8.0	6	6.5	7	7.5	5	11.5	0	5	8.0	4	14.0	0.31	0.91	0.35	0.34	0.24	0.40	0.28	169	194	206
	24'-6"	21	23	16	11	6	8.5	6	7.0	7	14.5	7	14.5	6	7.5	6	7.0	7	7.0	5	11.5	0	5	8.5	4	14.0	0.31	0.91	0.35	0.34	0.25	0.40	0.28	170	195	207
	26'-1"	22	24	16	11	6	8.5	6	6.5	7	14.5	7	14.5	6	7.5	6	6.5	7	7.0	5	11.5	0	5	7.5	4	14.0	0.31	0.90	0.35	0.34	0.25	0.40	0.28	170	197	209
	27'-8"	22	25	17	11	6	8.0	6	6.5	7	14.0	7	14.0	6	7.0	6	7.0	7	7.0	5	11.5	0	5	8.5	4	14.0	0.31	0.90	0.34	0.34	0.25	0.40	0.27	170	198	210
	29'-3"	23	26	17	11	6	8.0	6	6.5	7	14.0	7	14.0	6	7.5	6	6.5	7	7.5	5	11.5	0	5	7.5	4	14.0	0.31	0.90	0.34	0.34	0.25	0.39	0.27	170	200	212
	30'-10"	24	26	17	11	6	8.0	6	6.0	7	14.5	7	14.5	6	7.0	6	6.0	7	7.0	5	11.5	0	5	7.0	4	14.0	0.31	0.90	0.34	0.34	0.25	0.39	0.27	170	201	213

SPAN (S) = 13 ft — HT (ft) = 15 or 16

Loading	DESIGN FILL (ft-in)	TS Thick	BS Thick.	TX Thick	TI Thick.	A1 Size	A1 Bars c to c	J3 Size	J3 Bars c to c	H1 Size	H1 Bars c to c	H2 Size	H2 Bars c to c	A2 Size	A2 Bars c to c	J4 Size	J4 Bars c to c	H3 Size	H3 Bars c to c	B1 Size	B1 Bars c to c	G1	B2 Size	B2 Bars c to c	F Size	F Bars c to c	J4 C4	J4 K3	H3 C7	J3 C1	J3 K2	H1 C5	H2 C6	"C" Multiplier S = 13 ft (in)	"K" Multiplier HT = 15 ft (in)	HT = 16 ft (in)
HS20	0'-8"	12	12	12	12	6	7.0	6	8.5	6	13.0	6	13.0	5	7.0	7	6.5	7	7.0	5	11.5	12	5	7.0	4	14.0	0.53	0.95	0.45	0.42	0.20	0.80	0.31	168	199	211
	2'-4"	11	12	12	12	6	7.0	6	7.0	7	14.5	7	14.5	5	6.0	7	7.0	7	6.5	5	11.5	12	5	9.0	4	14.0	0.48	0.96	0.43	0.42	0.19	0.82	0.30	168	198	210
	4'-0"	11	12	12	12	5	6.5	6	8.0	6	12.5	6	12.5	5	7.0	6	6.0	7	7.0	5	11.5	12	5	8.5	4	14.0	0.42	0.96	0.40	0.47	0.19	0.44	0.25	168	198	210
	5'-8"	11	13	12	12	5	7.0	6	7.0	6	12.0	6	12.0	5	6.5	6	6.5	7	8.0	5	11.5	12	5	8.0	4	14.0	0.40	0.96	0.38	0.42	0.19	0.40	0.24	168	199	211
	7'-3"	11	14	12	12	5	6.5	6	7.0	7	15.5	7	15.5	5	6.0	6	6.5	7	7.5	5	11.5	0	5	7.0	4	14.0	0.39	0.96	0.37	0.40	0.19	0.40	0.26	168	200	212
HS20 MOD	0'-6"	14	13	12	12	6	7.0	6	8.0	6	12.5	6	12.5	5	6.5	7	6.5	7	7.0	5	11.5	12	6	8.5	4	14.0	0.53	0.94	0.46	0.42	0.20	0.80	0.35	168	202	214
	2'-2"	13	13	12	12	6	6.5	6	7.0	7	14.0	7	14.0	6	8.5	7	7.0	7	6.5	5	11.5	12	5	9.5	4	14.0	0.48	0.95	0.45	0.42	0.20	0.82	0.32	168	201	213
	4'-0"	11	12	12	12	6	8.5	6	7.0	7	15.0	7	15.0	5	6.0	7	7.5	7	7.0	5	11.5	12	5	8.5	4	14.0	0.44	0.96	0.41	0.48	0.19	0.49	0.28	168	198	210
	5'-8"	11	13	12	12	5	6.0	6	7.0	7	14.5	7	14.5	5	6.0	6	6.5	7	7.0	5	11.5	12	5	8.0	4	14.0	0.40	0.96	0.39	0.43	0.19	0.43	0.27	168	199	211
	7'-3"	11	14	12	12	5	6.0	6	6.5	7	14.5	7	14.5	5	6.0	6	6.0	7	8.0	5	11.5	0	5	7.0	4	14.0	0.39	0.96	0.38	0.40	0.19	0.41	0.26	168	200	212
HS20 MOD or HS20	8'-10"	12	15	12	12	5	6.5	6	6.5	7	15.0	7	15.0	5	6.0	6	6.0	7	8.5	5	11.5	0	5	7.0	4	14.0	0.39	0.95	0.36	0.38	0.19	0.39	0.25	168	202	214
	10'-5"	13	16	13	12	5	6.5	6	7.0	7	15.5	7	15.5	5	6.0	6	6.5	6	6.0	5	11.5	0	5	7.0	4	14.0	0.38	0.95	0.33	0.38	0.20	0.38	0.25	169	204	216
	11'-11"	14	17	14	12	5	6.5	6	7.0	7	15.5	7	15.5	6	8.5	6	6.5	7	7.5	5	11.5	0	5	7.5	4	14.0	0.37	0.95	0.35	0.37	0.20	0.38	0.25	169	206	218
	13'-6"	15	17	14	12	5	6.5	6	6.5	7	15.5	7	15.5	6	8.5	6	6.0	7	7.5	5	11.5	0	5	7.0	4	14.0	0.36	0.94	0.35	0.39	0.20	0.41	0.28	169	207	219
	15'-2"	15	18	15	12	5	6.0	6	7.0	7	14.5	7	14.5	6	8.0	6	6.0	7	8.0	5	11.5	0	5	7.0	4	14.0	0.36	0.94	0.35	0.39	0.20	0.41	0.28	170	208	220
	16'-9"	16	19	15	12	5	6.0	6	6.0	7	14.5	7	14.5	6	8.0	6	6.0	7	8.0	5	11.5	0	5	7.0	4	14.0	0.36	0.94	0.35	0.38	0.21	0.41	0.28	170	210	222
	18'-3"	17	20	16	12	5	6.0	6	6.5	7	14.5	7	14.5	6	8.0	6	6.0	7	8.0	5	11.5	0	5	7.0	4	14.0	0.35	0.93	0.34	0.38	0.21	0.40	0.28	170	212	224
	19'-10"	18	21	16	12	5	6.0	6	6.0	7	14.5	7	14.5	6	8.0	7	8.0	7	8.0	5	11.5	0	5	7.0	4	14.0	0.38	0.93	0.34	0.38	0.21	0.40	0.28	170	214	226
	21'-5"	19	22	17	12	5	6.0	6	6.0	7	14.5	7	14.5	6	8.0	6	6.0	7	8.0	5	11.5	0	5	7.0	4	14.0	0.35	0.93	0.34	0.38	0.21	0.40	0.28	171	216	228
	22'-11"	20	23	17	12	5	6.0	6	6.0	7	14.5	7	14.5	6	8.0	7	8.0	7	8.0	5	11.5	0	5	6.5	4	14.0	0.37	0.92	0.34	0.38	0.22	0.40	0.28	171	218	230
	24'-6"	21	24	18	12	5	6.0	6	6.0	7	14.5	7	14.5	6	7.5	7	8.0	7	7.5	5	11.5	0	5	6.5	4	14.0	0.37	0.92	0.34	0.38	0.22	0.40	0.28	171	220	232
	26'-2"	21	24	18	12	6	8.0	7	8.0	7	14.0	7	14.0	6	7.0	7	7.5	7	7.0	5	11.5	0	5	6.5	4	14.0	0.37	0.92	0.34	0.41	0.24	0.39	0.28	171	220	232
	27'-8"	22	25	19	12	6	8.0	7	8.0	7	14.0	7	14.0	6	7.0	7	8.0	7	7.0	5	11.5	0	5	6.5	4	14.0	0.37	0.92	0.34	0.41	0.24	0.39	0.27	172	222	234
	29'-3"	23	26	19	12	6	8.5	7	8.0	7	14.5	7	14.5	6	7.5	7	7.5	7	7.5	5	11.5	0	5	6.0	4	14.0	0.37	0.91	0.33	0.41	0.24	0.39	0.27	172	224	236
	30'-10"	24	26	20	12	6	8.0	7	8.0	7	14.0	7	14.0	6	7.0	7	8.0	7	7.0	5	11.5	0	5	6.5	4	14.0	0.37	0.91	0.34	0.41	0.24	0.39	0.27	172	225	237

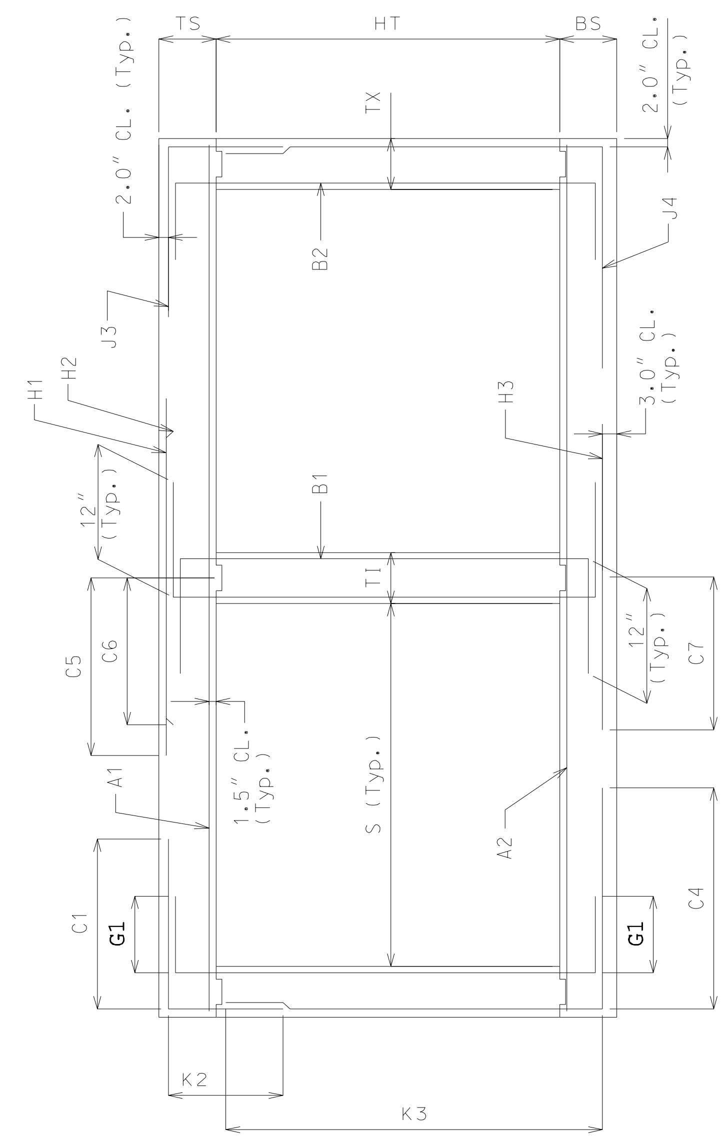

SECTION THRU BOX

NOTE: IF DESIGN FILL FALLS BETWEEN TABULATED FILLS, USE THE ADJACENT TABULATED FILL WHICH YIELDS THE GREATER MEMBER THICKNESS. IF THE MEMBER THICKNESSES ARE EQUAL, USE THE ADJACENT TABULATED FILL WHICH YIELDS THE GREATER AREA OF REINFORCEMENT.

SPECIAL DESIGNS ARE REQUIRED WHEN THE DESIGN FILL IS OUTSIDE THE RANGE OF TABULATED FILLS.

ALL DIMENSIONS ARE IN inch UNLESS OTHERWISE SPECIFIED.

COEFFICIENTS: DIMENSIONS MARKED WITH C# OR K# ARE THE PRODUCT OF THE COEFFICIENT AND ITS ASSOCIATED MULTIPLIER.

DESIGN FILL HEIGHT GIVEN IN THE TABLES IS THE HEIGHT FROM THE TOP OF THE EARTH FILL OR ROADWAY TO THE TOP OF THE TOP SLAB.

ALL CULVERTS MEET STRENGTH REQUIREMENTS FOR MILITARY 24 kips TANDEM AXLE LOADING.

MISSOURI HIGHWAY AND TRANSPORTATION COMMISSION

CONCRETE DOUBLE BOX CULVERT MEMBER SIZES AND REINFORCEMENT

(HS20 & HS20 MOD. LOADING)

DATE: | EFFECTIVE: 04-01-2002 | 703.45B

Span (S) = 14 ft — HT (ft) = 11 or 12

Loading	Design Fill (ft-in)	TS Thick	BS Thick.	TX Thick	TI Thick.	Top Slab A1 Size	A1 Bars c to c	J3 Size	J3 Bars c to c	H1 Size	H1 Bars c to c	H2 Size	H2 Bars c to c	Bottom Slab A2 Size	A2 Bars c to c	J4 Size	J4 Bars c to c	H3 Size	H3 Bars c to c	Wall B1 Size	B1 Bars c to c	B2 Bars G1	B2 Size	B2 c to c	F Size	F Bars c to c	J4 C4	J4 K3	H3 C7	J3 C1	J3 K2	H1 C5	H2 C6	"C" Multiplier S = 14 ft (in)	"K" Multiplier HT = 11 ft (in)	"K" Multiplier HT = 12 ft (in)
HS20	0'-8"	12	13	10	10	6	7.0	5	6.5	6	12.5	6	12.5	5	7.0	7	7.0	7	8.0	5	11.5	12	5	6.0	4	14.0	0.41	0.94	0.47	0.39	0.23	0.79	0.30	178	152	164
	2'-3"	12	12	10	10	6	6.5	6	8.0	7	14.0	7	14.0	5	6.0	7	8.0	7	6.0	5	11.5	12	5	11.5	4	14.0	0.33	0.94	0.43	0.42	0.26	0.61	0.30	178	151	163
	4'-0"	11	12	10	10	6	8.5	5	6.0	7	15.0	7	15.0	5	6.5	6	7.5	7	7.0	5	11.5	12	5	11.5	4	14.0	0.30	0.94	0.40	0.32	0.22	0.46	0.26	178	150	162
	5'-8"	11	13	10	10	6	8.5	6	8.0	7	14.0	7	14.0	5	6.5	6	8.0	7	7.0	5	11.5	12	5	11.5	4	14.0	0.29	0.94	0.38	0.30	0.25	0.42	0.25	178	151	163
	7'-2"	12	14	10	10	5	6.0	6	8.0	7	14.5	7	14.5	5	6.0	6	8.0	7	7.0	5	11.5	0	5	11.5	4	14.0	0.28	0.94	0.37	0.28	0.25	0.40	0.25	178	153	165
HS20 MOD	0'-7"	13	13	10	10	6	6.0	6	8.5	7	15.0	7	15.0	5	6.0	7	6.0	7	7.0	5	11.0	12	6	7.0	4	14.0	0.41	0.93	0.47	0.41	0.26	0.82	0.35	178	153	165
	2'-2"	13	13	10	10	7	8.0	6	7.0	7	12.5	7	12.5	6	8.0	7	7.0	8	7.5	5	11.0	12	5	9.5	4	14.0	0.35	0.93	0.49	0.41	0.26	0.82	0.31	178	153	165
	4'-0"	11	12	10	10	6	7.0	6	7.5	7	13.5	7	13.5	5	6.0	6	7.0	7	6.0	5	11.5	12	5	11.5	4	14.0	0.30	0.94	0.41	0.34	0.25	0.48	0.27	178	150	162
	5'-7"	12	13	10	10	6	8.0	6	8.0	7	14.0	7	14.0	5	6.0	6	7.5	7	6.5	5	11.5	12	5	11.5	4	14.0	0.29	0.94	0.39	0.30	0.26	0.43	0.26	178	152	164
	7'-2"	12	14	10	10	6	8.0	6	7.5	7	13.5	7	13.5	6	8.5	6	7.5	7	7.0	5	11.5	0	5	11.5	4	14.0	0.28	0.94	0.38	0.29	0.25	0.41	0.25	178	153	165
HS20 or HS20 MOD	8'-9"	13	15	10	10	6	8.5	6	7.5	7	14.0	7	14.0	6	8.5	6	8.0	7	7.0	5	11.5	0	5	11.5	4	14.0	0.27	0.93	0.37	0.27	0.26	0.38	0.24	178	155	167
	10'-4"	14	16	10	10	6	8.5	6	7.0	7	14.0	7	14.0	6	8.0	6	7.5	7	7.0	5	11.5	0	5	11.5	4	14.0	0.26	0.93	0.36	0.26	0.26	0.38	0.24	178	157	169
	11'-10"	15	17	10	10	5	6.0	6	7.0	7	14.0	7	14.0	6	8.0	6	7.0	7	7.0	5	11.5	0	5	11.5	4	14.0	0.25	0.92	0.36	0.28	0.26	0.40	0.27	178	159	171
	13'-5"	16	18	11	10	6	8.5	6	7.5	7	14.0	7	14.0	6	8.0	6	8.0	7	7.0	5	11.5	0	5	11.5	4	14.0	0.25	0.92	0.35	0.28	0.27	0.40	0.27	179	161	173
	15'-0"	17	19	11	10	6	8.5	6	7.0	7	14.0	7	14.0	6	8.0	6	7.5	7	7.0	5	11.5	0	5	11.5	4	14.0	0.25	0.91	0.35	0.28	0.27	0.40	0.27	179	163	175
	16'-7"	18	20	12	10	6	8.5	6	8.0	7	13.5	7	13.5	6	7.5	6	8.0	7	7.0	5	11.5	0	5	11.5	4	14.0	0.25	0.91	0.35	0.28	0.27	0.40	0.27	179	165	177
	18'-1"	19	21	12	10	6	8.0	6	7.5	7	13.5	7	13.5	6	7.5	6	7.5	7	7.0	5	11.5	0	5	11.0	4	14.0	0.25	0.90	0.35	0.28	0.28	0.40	0.27	179	167	179
	19'-8"	20	22	12	10	6	8.0	6	7.0	7	13.5	7	13.5	6	7.5	6	7.0	7	7.0	5	11.5	0	5	10.0	4	14.0	0.25	0.90	0.35	0.27	0.28	0.39	0.27	179	169	181
	21'-3"	21	23	13	10	6	8.0	6	7.5	7	13.5	7	13.5	6	7.0	6	7.5	7	7.0	5	11.5	0	5	11.0	4	14.0	0.25	0.90	0.35	0.28	0.28	0.39	0.27	180	171	183
	22'-9"	22	24	13	10	6	8.0	6	7.0	7	13.5	7	13.5	6	7.0	6	7.5	7	7.0	5	11.5	0	5	10.0	4	14.0	0.25	0.89	0.35	0.27	0.28	0.39	0.27	180	173	185
	24'-4"	23	25	14	10	6	7.5	6	7.5	7	13.5	7	13.5	6	7.0	6	8.0	7	7.0	5	11.5	0	5	10.5	4	14.0	0.25	0.89	0.34	0.28	0.29	0.39	0.26	180	175	187
	25'-11"	24	26	14	10	6	7.5	6	7.5	7	13.5	7	13.5	6	7.0	6	7.5	7	7.0	5	11.5	0	5	9.5	4	14.0	0.25	0.88	0.34	0.27	0.29	0.39	0.26	180	177	189
	27'-6"	24	27	14	10	6	7.0	6	7.0	7	12.5	7	12.5	6	7.0	6	7.5	7	7.0	5	11.5	0	5	9.0	4	14.0	0.24	0.88	0.34	0.27	0.29	0.39	0.26	180	178	190
	29'-1"	25	28	15	10	6	7.0	6	7.0	7	12.5	7	12.5	6	7.0	6	8.0	7	6.5	5	11.5	0	5	9.5	4	14.0	0.25	0.88	0.34	0.28	0.29	0.39	0.26	181	180	192
	30'-8"	26	28	15	10	6	7.0	6	7.0	7	12.5	7	12.5	6	7.0	6	7.5	7	6.5	5	11.5	0	5	9.0	4	14.0	0.25	0.88	0.34	0.28	0.29	0.38	0.26	181	181	193

SPAN (S) = 14 ft — HT (ft) = 13 or 14

Loading	Design Fill (ft-in)	TS Thick	BS Thick.	TX Thick	TI Thick.	Top Slab A1 Size	A1 Bars c to c	J3 Size	J3 Bars c to c	H1 Size	H1 Bars c to c	H2 Size	H2 Bars c to c	Bottom Slab A2 Size	A2 Bars c to c	J4 Size	J4 Bars c to c	H3 Size	H3 Bars c to c	Wall B1 Size	B1 Bars c to c	B2 Bars G1	B2 Size	B2 c to c	F Size	F Bars c to c	J4 C4	J4 K3	H3 C7	J3 C1	J3 K2	H1 C5	H2 C6	"C" Multiplier S = 14 ft (in)	"K" Multiplier HT = 13 ft (in)	"K" Multiplier HT = 14 ft (in)
HS20	0'-8"	12	12	11	11	6	7.0	5	6.0	6	12.5	6	12.5	5	7.0	7	7.0	7	7.0	5	11.5	12	5	6.0	4	14.0	0.44	0.95	0.45	0.40	0.20	0.79	0.30	179	175	187
	2'-3"	12	12	11	11	6	6.5	6	7.0	7	14.0	7	14.0	6	8.5	7	7.5	8	7.5	5	11.5	12	5	11.5	4	14.0	0.40	0.95	0.46	0.51	0.22	0.67	0.30	179	175	187
	4'-0"	11	12	11	11	6	8.5	6	8.0	7	15.0	7	15.0	5	6.5	6	7.0	7	7.0	5	11.5	12	5	11.5	4	14.0	0.35	0.95	0.39	0.38	0.22	0.46	0.27	179	174	186
	5'-8"	11	13	11	11	5	6.0	6	7.5	7	14.0	7	14.0	5	6.0	6	7.0	7	7.0	5	11.5	12	5	11.5	4	14.0	0.33	0.95	0.38	0.35	0.22	0.42	0.25	179	175	187
	7'-2"	12	14	11	11	5	6.0	6	7.0	7	14.5	7	14.5	5	6.0	6	7.0	7	7.0	5	11.5	0	5	11.0	4	14.0	0.31	0.95	0.37	0.32	0.22	0.40	0.25	179	177	189
HS20 MOD	0'-6"	14	13	11	11	6	6.5	6	8.5	7	16.0	7	16.0	5	6.0	7	6.5	7	7.0	5	11.5	12	6	7.0	4	14.0	0.45	0.94	0.46	0.41	0.23	0.82	0.36	179	178	190
	2'-2"	13	13	11	11	7	8.0	6	7.0	7	12.5	7	12.5	6	7.5	7	7.0	8	7.5	5	11.5	12	5	9.0	4	14.0	0.40	0.94	0.48	0.41	0.23	0.82	0.31	179	177	189
	4'-0"	11	13	11	11	6	7.0	6	7.0	7	13.5	7	13.5	6	8.5	6	6.5	7	6.0	5	11.5	12	5	11.5	4	14.0	0.35	0.95	0.40	0.39	0.22	0.48	0.27	179	175	187
	5'-7"	12	14	11	11	6	8.5	6	7.0	7	14.0	7	14.0	6	8.5	6	7.0	7	6.5	5	11.5	12	5	11.5	4	14.0	0.33	0.95	0.39	0.35	0.22	0.43	0.26	179	177	189
	7'-2"	12	14	11	11	6	8.5	6	7.0	7	13.5	7	13.5	6	8.0	6	7.0	7	7.0	5	11.5	0	5	11.0	4	14.0	0.31	0.95	0.37	0.33	0.22	0.41	0.25	179	177	189
HS20 or HS20 MOD	8'-9"	13	15	11	11	5	6.0	6	7.0	7	14.5	7	14.5	6	8.0	6	7.0	7	7.0	5	11.5	0	5	10.5	4	14.0	0.30	0.94	0.37	0.31	0.22	0.38	0.24	179	179	191
	10'-4"	14	16	11	11	5	6.0	6	6.5	7	14.5	7	14.5	6	8.0	6	6.5	7	7.0	5	11.5	0	5	9.0	4	14.0	0.30	0.94	0.36	0.30	0.23	0.37	0.24	179	181	193
	11'-10"	15	17	12	11	5	6.0	6	7.0	7	14.5	7	14.5	6	8.0	6	7.0	7	7.0	5	11.5	0	5	10.0	4	14.0	0.29	0.93	0.35	0.32	0.23	0.40	0.27	180	183	195
	13'-5"	16	18	12	11	5	6.0	6	6.5	7	14.0	7	14.0	6	7.5	6	6.5	7	7.0	5	11.5	0	5	9.0	4	14.0	0.29	0.93	0.35	0.32	0.23	0.40	0.27	180	185	197
	15'-0"	17	19	13	11	5	6.0	6	7.0	7	14.0	7	14.0	6	7.5	6	7.0	7	7.0	5	11.5	0	5	9.0	4	14.0	0.29	0.92	0.35	0.32	0.24	0.40	0.27	180	187	199
	16'-7"	18	20	13	11	6	8.5	6	6.5	7	14.0	7	14.0	6	7.5	6	6.5	7	7.0	5	11.5	0	5	9.0	4	14.0	0.29	0.92	0.35	0.31	0.24	0.40	0.27	180	189	201
	18'-1"	19	21	14	11	6	8.5	6	7.0	7	14.0	7	14.0	6	7.5	6	7.0	7	7.0	5	11.5	0	5	9.0	4	14.0	0.29	0.92	0.35	0.31	0.24	0.39	0.27	181	191	203
	19'-8"	20	22	14	11	6	8.0	6	6.5	7	14.0	7	14.0	6	7.0	6	6.5	7	7.0	5	11.5	0	5	8.5	4	14.0	0.28	0.91	0.34	0.31	0.24	0.39	0.27	181	193	205
	21'-3"	21	23	15	11	6	8.0	6	7.0	7	13.5	7	13.5	6	7.0	6	7.0	7	7.0	5	11.5	0	5	9.0	4	14.0	0.29	0.91	0.34	0.31	0.25	0.39	0.27	181	195	207
	22'-9"	22	24	15	11	6	8.0	6	6.5	7	13.5	7	13.5	6	7.0	6	6.5	7	7.0	5	11.5	0	5	8.0	4	14.0	0.28	0.90	0.34	0.31	0.25	0.39	0.27	181	197	209
	24'-4"	23	25	16	11	6	8.0	6	7.0	7	13.5	7	13.5	6	7.0	6	7.0	7	7.0	5	11.5	0	5	8.5	4	14.0	0.28	0.90	0.34	0.31	0.25	0.39	0.27	182	199	211
	25'-11"	24	26	16	11	6	7.5	6	6.5	7	13.5	7	13.5	6	7.0	6	6.5	7	7.0	5	11.5	0	5	7.5	4	14.0	0.28	0.90	0.34	0.31	0.25	0.39	0.26	182	201	213
	27'-6"	24	27	17	11	6	7.0	6	6.5	7	12.5	7	12.5	6	7.0	6	7.0	7	7.0	5	11.5	0	5	8.5	4	14.0	0.29	0.90	0.34	0.31	0.25	0.39	0.26	182	202	214
	29'-1"	25	28	17	11	6	7.0	6	6.5	7	12.5	7	12.5	6	7.0	6	6.5	7	7.0	5	11.5	0	5	7.5	4	14.0	0.28	0.89	0.33	0.31	0.26	0.38	0.26	182	204	216
	30'-8"	26	28	17	11	6	7.0	6	6.0	7	13.0	7	13.0	6	7.0	6	6.0	7	6.5	5	11.5	0	5	7.0	4	14.0	0.28	0.89	0.33	0.31	0.26	0.38	0.26	182	205	217

SPAN (S) = 14 ft — HT (ft) = 15 or 16

Loading	Design Fill (ft-in)	TS Thick	BS Thick.	TX Thick	TI Thick.	Top Slab A1 Size	A1 Bars c to c	J3 Size	J3 Bars c to c	H1 Size	H1 Bars c to c	H2 Size	H2 Bars c to c	Bottom Slab A2 Size	A2 Bars c to c	J4 Size	J4 Bars c to c	H3 Size	H3 Bars c to c	Wall B1 Size	B1 Bars c to c	B2 Bars G1	B2 Size	B2 c to c	F Size	F Bars c to c	J4 C4	J4 K3	H3 C7	J3 C1	J3 K2	H1 C5	H2 C6	"C" Multiplier S = 14 ft (in)	"K" Multiplier HT = 15 ft (in)	"K" Multiplier HT = 16 ft (in)
HS20	0'-8"	12	12	12	12	6	7.0	6	8.0	6	12.5	6	12.5	5	7.0	7	6.0	7	7.0	5	11.5	12	5	7.0	4	14.0	0.49	0.95	0.44	0.41	0.20	0.79	0.30	180	199	211
	2'-3"	12	13	12	12	6	6.5	6	7.0	7	14.0	7	14.0	6	8.5	7	7.0	7	6.5	5	11.5	12	5	9.5	4	14.0	0.45	0.95	0.43	0.41	0.20	0.82	0.29	180	200	212
	4'-0"	11	12	12	12	6	8.5	6	7.0	7	15.0	7	15.0	5	6.0	7	7.5	7	6.5	5	11.5	12	5	9.0	4	14.0	0.41	0.96	0.39	0.43	0.19	0.45	0.27	180	198	210
	5'-8"	11	13	12	12	5	6.0	6	7.0	7	14.0	7	14.0	6	8.5	6	6.0	7	7.0	5	11.5	12	5	8.5	4	14.0	0.37	0.96	0.38	0.39	0.19	0.41	0.25	180	199	211
	7'-2"	12	14	12	12	5	6.0	6	7.0	7	14.5	7	14.5	6	8.5	6	6.0	7	7.0	5	11.5	0	5	7.5	4	14.0	0.36	0.95	0.37	0.37	0.20	0.40	0.25	180	201	213
HS20 MOD	0'-6"	14	13	12	12	6	6.5	6	7.5	7	15.5	7	15.5	5	6.0	7	6.0	7	6.0	5	11.5	12	6	7.0	4	14.0	0.50	0.94	0.44	0.41	0.20	0.82	0.36	180	202	214
	2'-2"	13	14	12	12	6	6.0	6	6.5	7	12.5	7	12.5	6	7.5	7	6.5	7	6.0	5	11.5	12	5	9.5	4	14.0	0.45	0.95	0.45	0.41	0.20	0.82	0.30	180	202	214
	4'-0"	11	13	12	12	6	7.0	6	7.0	7	13.5	7	13.5	6	8.5	6	6.0	7	7.0	5	11.5	12	5	9.0	4	14.0	0.39	0.96	0.40	0.44	0.19	0.47	0.27	180	199	211
	5'-7"	12	14	12	12	6	8.5	6	7.0	7	14.0	7	14.0	5	6.0	6	6.0	7	7.0	5	11.5	12	5	8.5	4	14.0	0.38	0.95	0.38	0.40	0.20	0.43	0.26	180	201	213
	7'-2"	12	15	12	12	6	8.5	6	6.5	7	13.5	7	13.5	6	8.5	6	6.0	7	7.5	5	11.5	0	5	7.5	4	14.0	0.36	0.95	0.37	0.37	0.19	0.41	0.25	180	202	214
HS20 or HS20 MOD	8'-9"	13	16	12	12	5	6.0	6	6.0	7	14.5	7	14.5	6	8.0	6	6.0	7	7.0	5	11.5	0	5	7.0	4	14.0	0.35	0.95	0.36	0.36	0.20	0.38	0.24	180	204	216
	10'-4"	14	17	13	12	5	6.0	6	6.5	7	14.5	7	14.5	6	8.0	6	6.0	7	7.0	5	11.5	0	5	7.5	4	14.0	0.35	0.95	0.35	0.35	0.20	0.38	0.24	181	206	218
	11'-10"	15	18	14	12	5	6.0	6	7.0	7	14.5	7	14.5	6	8.0	6	6.5	7	7.0	5	11.5	0	5	8.0	4	14.0	0.34	0.94	0.35	0.37	0.20	0.40	0.27	181	208	220
	13'-5"	16	18	14	12	5	6.0	6	6.0	7	14.5	7	14.5	6	7.5	7	8.0	7	7.0	5	11.5	0	5	7.0	4	14.0	0.36	0.94	0.35	0.36	0.21	0.40	0.27	181	209	221
	15'-0"	17	19	15	12	5	6.0	6	6.5	7	14.5	7	14.5	6	7.5	6	6.0	7	7.0	5	11.5	0	5	7.5	4	14.0	0.33	0.93	0.35	0.36	0.21	0.40	0.27	182	211	223
	16'-7"	18	20	15	12	5	6.0	6	6.0	7	14.0	7	14.0	6	7.5	7	8.0	7	7.0	5	11.5	0	5	7.0	4	14.0	0.35	0.93	0.34	0.35	0.21	0.40	0.27	182	213	225
	18'-1"	19	21	16	12	6	8.5	6	6.0	7	14.0	7	14.0	6	7.0	7	8.0	7	7.0	5	11.5	0	5	7.0	4	14.0	0.35	0.93	0.34	0.35	0.22	0.39	0.27	182	215	227
	19'-8"	20	22	16	12	6	8.5	6	6.0	7	14.0	7	14.0	6	7.0	7	7.5	7	7.0	5	11.5	0	5	7.0	4	14.0	0.34	0.92	0.34	0.35	0.22	0.39	0.27	182	217	229
	21'-3"	21	23	17	12	6	8.5	6	6.0	7	14.0	7	14.0	6	7.0	7	8.0	7	7.0	5	11.5	0	5	7.0	4	14.0	0.34	0.92	0.34	0.35	0.22	0.39	0.27	183	219	231
	22'-9"	22	24	17	12	6	8.0	7	8.0	7	14.0	7	14.0	6	7.0	7	7.5	7	7.0	5	11.5	0	5	7.0	4	14.0	0.34	0.91	0.34	0.37	0.24	0.39	0.27	183	221	233
	24'-4"	23	25	18	12	6	8.0	6	6.0	7	14.0	7	14.0	6	7.0	7	8.0	7	7.0	5	11.5	0	5	7.0	4	14.0	0.34	0.91	0.34	0.35	0.23	0.39	0.27	183	223	235
	25'-11"	24	26	18	12	6	8.0	7	8.0	7	14.0	7	14.0	6	7.0	7	7.5	7	7.0	5	11.5	0	5	6.5	4	14.0	0.34	0.91	0.34	0.37	0.25	0.38	0.26	183	225	237
	27'-6"	24	27	19	12	6	7.5	7	8.0	7	13.0	7	13.0	6	7.0	7	8.0	7	7.0	5	11.5	0	5	7.0	4	14.0	0.34	0.91	0.33	0.38	0.25	0.38	0.26	184	226	238
	29'-1"	25	28	19	12	6	7.5	7	7.5	7	13.0	7	13.0	6	7.0	7	7.5	7	7.0	5	11.5	0	5	6.0	4	14.0	0.34	0.90	0.33	0.37	0.26	0.38	0.26	184	228	240
	30'-8"	26	28	20	12	6	7.5	7	8.0	7	13.5	7	13.5	6	6.5	7	7.5	7	6.5	5	11.5	0	5	6.5	4	14.0	0.34	0.90	0.33	0.38	0.25	0.38	0.26	184	229	241

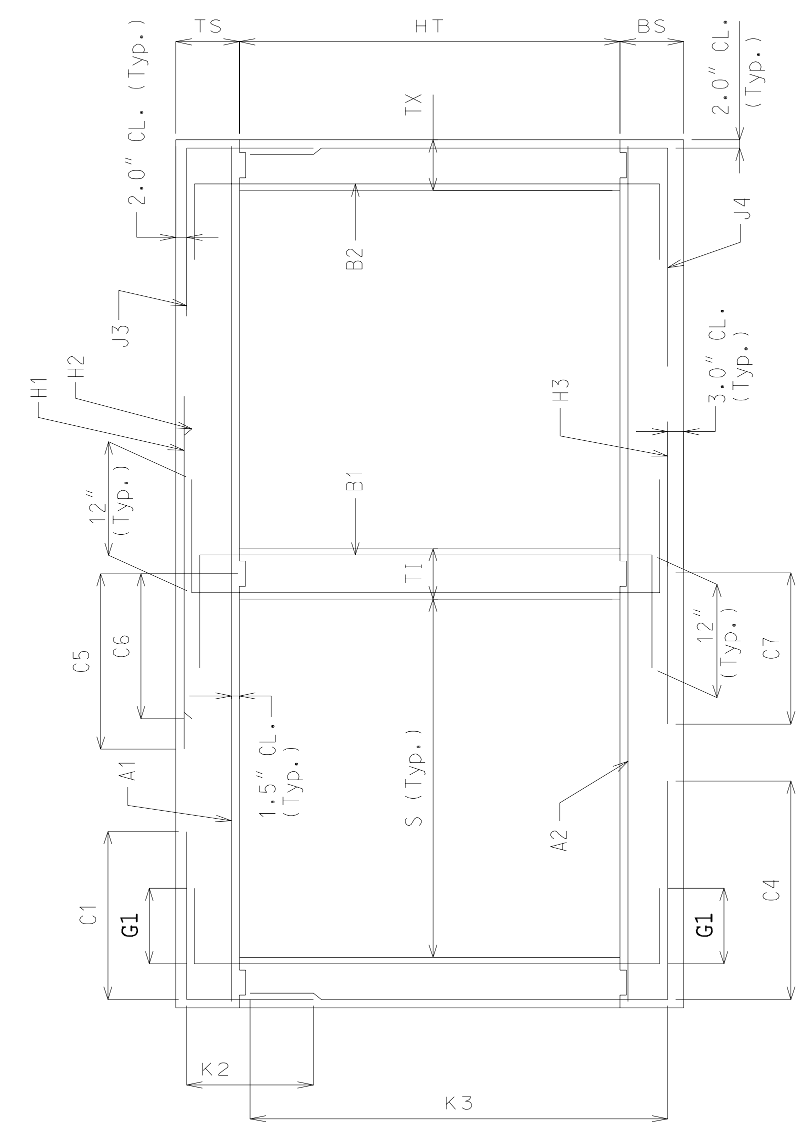

SECTION THRU BOX

NOTE: IF DESIGN FILL FALLS BETWEEN TABULATED FILLS, USE THE ADJACENT TABULATED FILL WHICH YIELDS THE GREATER MEMBER THICKNESS. IF THE MEMBER THICKNESSES ARE EQUAL, USE THE ADJACENT TABULATED FILL WHICH YIELDS THE GREATER AREA OF REINFORCEMENT.

SPECIAL DESIGNS ARE REQUIRED WHEN THE DESIGN FILL IS OUTSIDE THE RANGE OF TABULATED FILLS.

ALL DIMENSIONS ARE IN inch UNLESS OTHERWISE SPECIFIED.

COEFFICIENTS: DIMENSIONS MARKED WITH C# OR K# ARE THE PRODUCT OF THE COEFFICIENT AND ITS ASSOCIATED MULTIPLIER.

DESIGN FILL HEIGHT GIVEN IN THE TABLES IS THE HEIGHT FROM THE TOP OF THE EARTH FILL OR ROADWAY TO THE TOP OF THE TOP SLAB.

ALL CULVERTS MEET STRENGTH REQUIREMENTS FOR MILITARY 24 kips TANDEM AXLE LOADING.

MISSOURI HIGHWAY AND TRANSPORTATION COMMISSION

CONCRETE DOUBLE BOX CULVERT

MEMBER SIZES AND REINFORCEMENT

(HS20 & HS20 MOD. LOADING)

DATE:	EFFECTIVE: 04-01-2002	703.45B	11/13

Span (S) = 15 ft
HT (ft) = 12 or 13 or 14

DESIGN FILL	(ft-in)	TS Thick	BS Thick.	TX Thick	TI Thick.	TOP SLAB BARS A1 Size	A1 Bars c to c	J3 Size	J3 Bars c to c	H1 Size	H1 Bars c to c	H2 Size	H2 Bars c to c	BOTTOM SLAB BARS A2 Size	A2 Bars c to c	J4 Size	J4 Bars c to c	H3 Size	H3 Bars c to c	WALL BARS B1 Size	B1 Bars c to c	B2 Bars G1	B2 Size	B2 c to c	F Size	F Bars c to c	COEFFICIENTS (see note) J4 C4	J4 K3	H3 C7	J3 C1	J3 K2	H1 C5	H2 C6	"C" Multiplier S = 15 ft (in)	"K" Multiplier HT = 12 ft (in)	HT = 13 ft (in)	HT = 14 ft (in)
HS20	0'-8"	12	12	11	11	6	6.5	6	8.0	7	15.5	7	15.5	5	6.5	7	7.0	8	7.5	5	11.0	12	5	10.0	4	14.0	0.42	0.95	0.46	0.40	0.24	0.81	0.28	191	163	175	187
HS20	2'-3"	12	13	11	11	7	8.0	6	7.0	7	12.5	7	12.5	6	8.0	7	7.0	8	7.0	5	11.0	12	5	11.5	4	14.0	0.38	0.95	0.45	0.46	0.24	0.59	0.28	191	164	176	188
HS20	4'-0"	11	12	11	11	6	7.0	6	7.0	7	13.5	7	13.5	6	8.5	6	6.5	8	7.5	5	11.5	12	5	11.5	4	14.0	0.32	0.95	0.42	0.36	0.23	0.44	0.26	191	162	174	186
HS20	5'-7"	12	13	11	11	6	7.5	6	7.0	7	12.5	7	12.5	6	8.0	6	7.0	8	8.0	5	11.5	12	5	11.5	4	14.0	0.30	0.95	0.41	0.33	0.23	0.41	0.25	191	164	176	188
HS20	7'-2"	12	15	11	11	6	7.5	6	7.0	7	12.5	7	12.5	6	7.5	6	7.0	7	6.0	5	11.5	0	5	11.5	4	14.0	0.29	0.95	0.36	0.30	0.24	0.39	0.24	191	166	178	190
HS20 MOD	0'-6"	14	13	11	11	6	6.0	6	8.0	7	15.0	7	15.0	5	6.0	7	7.5	8	7.5	5	11.5	12	5	8.5	4	14.0	0.42	0.94	0.47	0.40	0.25	0.81	0.28	191	166	178	190
HS20 MOD	2'-1"	14	14	11	11	7	7.5	6	7.0	7	12.5	7	12.5	6	7.5	7	7.0	8	7.5	5	11.5	12	5	9.5	4	14.0	0.37	0.94	0.47	0.47	0.25	0.81	0.30	191	167	179	191
HS20 MOD	3'-11"	12	13	11	11	6	7.0	6	7.0	7	13.0	7	13.0	6	8.5	6	6.0	7	6.0	5	11.5	12	5	11.5	4	14.0	0.32	0.95	0.40	0.37	0.24	0.47	0.26	191	164	176	188
HS20 MOD	5'-7"	12	14	11	11	6	7.0	6	7.0	7	12.5	7	12.5	6	8.0	6	6.5	7	6.5	5	11.5	12	5	11.5	4	14.0	0.30	0.95	0.38	0.33	0.24	0.43	0.25	191	165	177	189
HS20 MOD	7'-1"	13	15	11	11	6	7.5	6	7.0	7	12.5	7	12.5	6	8.0	6	6.5	7	6.5	5	11.5	0	5	11.5	4	14.0	0.29	0.94	0.37	0.30	0.24	0.40	0.24	191	167	179	191
HS20 MOD or HS20	8'-8"	14	16	11	11	6	8.0	6	6.5	7	13.5	7	13.5	6	7.5	6	7.0	7	6.5	5	11.5	0	5	10.5	4	14.0	0.28	0.94	0.36	0.29	0.24	0.38	0.23	191	169	181	193
HS20 MOD or HS20	10'-3"	15	17	11	11	6	8.0	6	6.0	7	13.0	7	13.0	6	7.5	6	6.0	7	6.5	5	11.5	0	5	9.5	4	14.0	0.28	0.93	0.36	0.30	0.25	0.40	0.26	191	171	183	195
HS20 MOD or HS20	11'-9"	16	18	12	11	6	8.0	6	7.0	7	13.0	7	13.0	6	7.0	6	6.5	7	6.5	5	11.5	0	5	10.5	4	14.0	0.27	0.93	0.35	0.30	0.25	0.40	0.26	192	173	185	197
HS20 MOD or HS20	13'-4"	17	19	12	11	6	8.0	6	6.5	7	13.0	7	13.0	6	7.0	6	6.0	7	6.5	5	11.5	0	5	9.0	4	14.0	0.27	0.92	0.35	0.29	0.25	0.39	0.26	192	175	187	199
HS20 MOD or HS20	14'-11"	18	20	13	11	6	7.5	6	7.0	7	12.5	7	12.5	6	7.0	6	6.5	7	6.5	5	11.5	0	5	9.5	4	14.0	0.27	0.92	0.35	0.29	0.25	0.39	0.26	192	177	189	201
HS20 MOD or HS20	16'-6"	19	21	13	11	6	7.5	6	6.5	7	12.5	7	12.5	6	7.0	6	6.0	7	6.5	5	11.5	0	5	9.0	4	14.0	0.26	0.92	0.34	0.29	0.26	0.39	0.26	192	179	191	203
HS20 MOD or HS20	18'-0"	20	22	14	11	6	7.5	6	7.0	7	12.5	7	12.5	6	7.0	6	6.5	7	6.5	5	11.5	0	5	9.0	4	14.0	0.27	0.91	0.34	0.29	0.26	0.39	0.26	193	181	193	205
HS20 MOD or HS20	19'-7"	21	23	14	11	6	7.0	6	6.5	7	12.5	7	12.5	6	7.0	6	6.0	7	6.0	5	11.5	0	5	8.5	4	14.0	0.26	0.91	0.34	0.29	0.26	0.39	0.26	193	183	195	207
HS20 MOD or HS20	21'-2"	22	25	15	11	6	7.0	6	6.5	7	12.5	7	12.5	6	7.0	6	7.0	7	6.0	5	11.5	0	5	9.0	4	14.0	0.26	0.90	0.34	0.29	0.27	0.39	0.26	193	186	198	210
HS20 MOD or HS20	22'-8"	23	25	15	11	6	7.0	6	6.5	7	12.5	7	12.5	6	6.5	6	6.0	7	6.0	5	11.5	0	5	8.5	4	14.0	0.26	0.90	0.34	0.29	0.27	0.38	0.26	193	187	199	211
HS20 MOD or HS20	24'-3"	24	27	16	11	6	7.0	6	6.5	7	12.0	7	12.0	6	6.5	6	7.0	7	6.0	5	11.5	0	5	8.5	4	14.0	0.26	0.90	0.34	0.29	0.27	0.38	0.26	194	190	202	214
HS20 MOD or HS20	25'-10"	25	27	16	11	6	7.0	6	6.5	7	12.0	7	12.0	6	6.5	6	6.5	7	6.0	5	11.5	0	5	8.0	4	14.0	0.26	0.89	0.34	0.29	0.27	0.38	0.26	194	191	203	215
HS20 MOD or HS20	27'-4"	26	28	17	11	6	7.0	6	6.5	7	12.0	7	12.0	6	6.5	6	6.5	7	6.0	5	11.5	0	5	8.5	4	14.0	0.26	0.89	0.34	0.29	0.28	0.38	0.25	194	193	205	217
HS20 MOD or HS20	28'-11"	27	29	17	11	6	7.0	6	6.5	7	12.0	7	12.0	6	6.0	6	6.5	7	6.0	5	11.5	0	5	7.5	4	14.0	0.26	0.89	0.33	0.29	0.28	0.38	0.25	194	195	207	219
HS20 MOD or HS20	30'-6"	28	30	17	11	6	6.5	6	6.0	7	12.0	7	12.0	6	6.0	6	6.0	7	6.0	5	11.5	0	5	7.0	4	14.0	0.26	0.88	0.33	0.29	0.28	0.37	0.25	194	197	209	221

SPAN (S) = 15 ft
HT (ft) = 15 or 16

DESIGN FILL	(ft-in)	TS Thick	BS Thick.	TX Thick	TI Thick.	TOP SLAB BARS A1 Size	A1 Bars c to c	J3 Size	J3 Bars c to c	H1 Size	H1 Bars c to c	H2 Size	H2 Bars c to c	BOTTOM SLAB BARS A2 Size	A2 Bars c to c	J4 Size	J4 Bars c to c	H3 Size	H3 Bars c to c	WALL BARS B1 Size	B1 Bars c to c	B2 Bars G1	B2 Size	B2 c to c	F Size	F Bars c to c	COEFFICIENTS (see note) J4 C4	J4 K3	H3 C7	J3 C1	J3 K2	H1 C5	H2 C6	"C" Multiplier S = 15 ft (in)	"K" Multiplier HT = 15 ft (in)	HT = 16 ft (in)
HS20	0'-8"	12	12	12	12	6	6.5	6	7.5	7	15.5	7	15.5	5	6.5	7	6.5	7	6.0	5	11.5	12	5	10.5	4	14.0	0.46	0.95	0.43	0.41	0.20	0.81	0.27	192	199	211
HS20	2'-3"	12	13	12	12	7	8.0	6	6.5	7	12.5	7	12.5	6	8.0	7	7.0	8	7.5	5	11.5	12	5	9.5	4	14.0	0.42	0.95	0.45	0.41	0.20	0.81	0.28	192	200	212
HS20	4'-0"	11	13	12	12	6	7.5	6	7.0	7	13.5	7	13.5	6	8.5	6	6.0	7	6.5	5	11.5	12	5	9.0	4	14.0	0.37	0.96	0.39	0.40	0.19	0.44	0.26	192	199	211
HS20	5'-7"	12	14	12	12	6	7.5	6	6.5	7	12.5	7	12.5	6	8.0	6	6.0	7	7.0	5	11.5	12	5	9.0	4	14.0	0.35	0.96	0.37	0.37	0.20	0.41	0.25	192	201	213
HS20	7'-2"	12	15	12	12	6	7.5	6	6.0	7	12.5	7	12.5	6	8.0	6	6.0	7	7.0	5	11.5	0	5	8.5	4	14.0	0.34	0.95	0.36	0.35	0.19	0.39	0.24	192	202	214
HS20 MOD	0'-6"	14	13	12	12	6	6.0	6	7.0	7	15.0	7	15.0	5	6.0	7	7.0	7	6.0	5	11.5	12	5	8.5	4	14.0	0.47	0.94	0.44	0.41	0.20	0.81	0.29	192	202	214
HS20 MOD	2'-1"	14	14	12	12	7	7.5	6	6.5	7	12.5	7	12.5	6	7.5	7	7.0	8	7.5	5	11.5	12	5	10.0	4	14.0	0.42	0.94	0.46	0.41	0.20	0.81	0.30	192	203	215
HS20 MOD	3'-11"	12	13	12	12	6	7.0	6	7.0	7	13.0	7	13.0	6	8.0	7	7.5	8	7.5	5	11.5	12	5	9.0	4	14.0	0.39	0.95	0.42	0.41	0.20	0.47	0.26	192	200	212
HS20 MOD	5'-7"	12	14	12	12	6	7.0	6	6.5	7	12.5	7	12.5	6	7.5	7	8.0	7	6.0	5	11.5	12	5	9.0	4	14.0	0.37	0.95	0.38	0.37	0.20	0.42	0.25	192	201	213
HS20 MOD	7'-1"	13	15	12	12	6	7.5	6	6.0	7	12.5	7	12.5	6	7.5	7	8.0	7	6.5	5	11.5	0	5	8.5	4	14.0	0.36	0.95	0.37	0.35	0.20	0.40	0.24	192	203	215
HS20 MOD or HS20	8'-8"	14	16	12	12	6	8.0	7	8.0	7	14.0	7	14.0	6	7.5	7	7.5	7	6.5	5	11.5	0	5	7.5	4	14.0	0.35	0.95	0.36	0.35	0.22	0.38	0.23	192	205	217
HS20 MOD or HS20	10'-3"	15	17	13	12	6	8.0	6	6.0	7	13.5	7	13.5	6	7.0	6	6.0	7	6.5	5	11.5	0	5	8.0	4	14.0	0.32	0.94	0.35	0.34	0.20	0.40	0.26	193	207	219
HS20 MOD or HS20	11'-9"	16	18	14	12	6	8.0	6	6.5	7	13.0	7	13.0	6	7.0	6	6.0	7	6.5	5	11.5	0	5	8.5	4	14.0	0.31	0.94	0.34	0.34	0.21	0.39	0.26	193	209	221
HS20 MOD or HS20	13'-4"	17	19	14	12	6	8.0	6	6.0	7	13.0	7	13.0	6	7.0	7	8.0	7	6.5	5	11.5	0	5	7.5	4	14.0	0.33	0.93	0.34	0.33	0.21	0.39	0.26	193	211	223
HS20 MOD or HS20	14'-11"	18	21	15	12	6	8.0	6	6.0	7	13.0	7	13.0	6	7.0	6	6.0	7	6.5	5	11.5	0	5	7.5	4	14.0	0.30	0.93	0.34	0.33	0.21	0.39	0.26	194	214	226
HS20 MOD or HS20	16'-6"	19	22	15	12	6	7.5	6	6.0	7	12.5	7	12.5	6	7.0	7	8.0	7	6.5	5	11.5	0	5	7.0	4	14.0	0.32	0.93	0.34	0.33	0.22	0.39	0.26	194	216	228
HS20 MOD or HS20	18'-0"	20	23	16	12	6	7.5	6	6.0	7	12.5	7	12.5	6	7.0	7	8.0	7	7.0	5	11.5	0	5	7.5	4	14.0	0.32	0.92	0.33	0.33	0.22	0.39	0.26	194	218	230
HS20 MOD or HS20	19'-7"	21	24	16	12	6	7.5	7	8.0	7	12.5	7	12.5	6	7.0	7	7.5	7	7.0	5	11.5	0	5	7.0	4	14.0	0.32	0.92	0.33	0.35	0.24	0.39	0.26	194	220	232
HS20 MOD or HS20	21'-2"	22	25	17	12	6	7.5	6	6.0	7	12.5	7	12.5	6	7.0	7	8.0	7	6.5	5	11.5	0	5	7.0	4	14.0	0.32	0.92	0.33	0.33	0.22	0.38	0.26	195	222	234
HS20 MOD or HS20	22'-8"	23	26	17	12	6	7.0	7	7.5	7	12.5	7	12.5	6	7.0	7	7.5	7	6.5	5	11.5	0	5	7.0	4	14.0	0.32	0.91	0.33	0.35	0.24	0.38	0.26	195	224	236
HS20 MOD or HS20	24'-3"	24	27	18	12	6	7.0	7	8.0	7	12.5	7	12.5	6	6.5	7	8.0	7	6.5	5	11.5	0	5	7.0	4	14.0	0.32	0.91	0.33	0.35	0.25	0.38	0.26	195	226	238
HS20 MOD or HS20	25'-10"	25	28	18	12	6	7.0	7	7.5	7	12.5	7	12.5	6	6.5	7	7.5	7	6.5	5	11.5	0	5	6.5	4	14.0	0.32	0.90	0.33	0.35	0.26	0.38	0.26	195	228	240
HS20 MOD or HS20	27'-4"	26	29	19	12	6	7.0	7	8.0	7	12.5	7	12.5	6	6.5	7	7.5	7	6.0	5	11.5	0	5	7.0	4	14.0	0.32	0.90	0.33	0.35	0.25	0.37	0.25	196	230	242
HS20 MOD or HS20	28'-11"	27	29	19	12	6	7.0	7	7.5	7	12.5	7	12.5	6	6.0	7	7.5	7	6.0	5	11.5	0	5	6.5	4	14.0	0.32	0.90	0.33	0.35	0.25	0.37	0.25	196	231	243
HS20 MOD or HS20	30'-6"	28	30	20	12	6	7.0	7	7.5	7	12.5	7	12.5	6	6.0	7	7.5	7	6.0	5	11.5	0	5	6.5	4	14.0	0.32	0.89	0.32	0.35	0.26	0.37	0.25	196	233	245

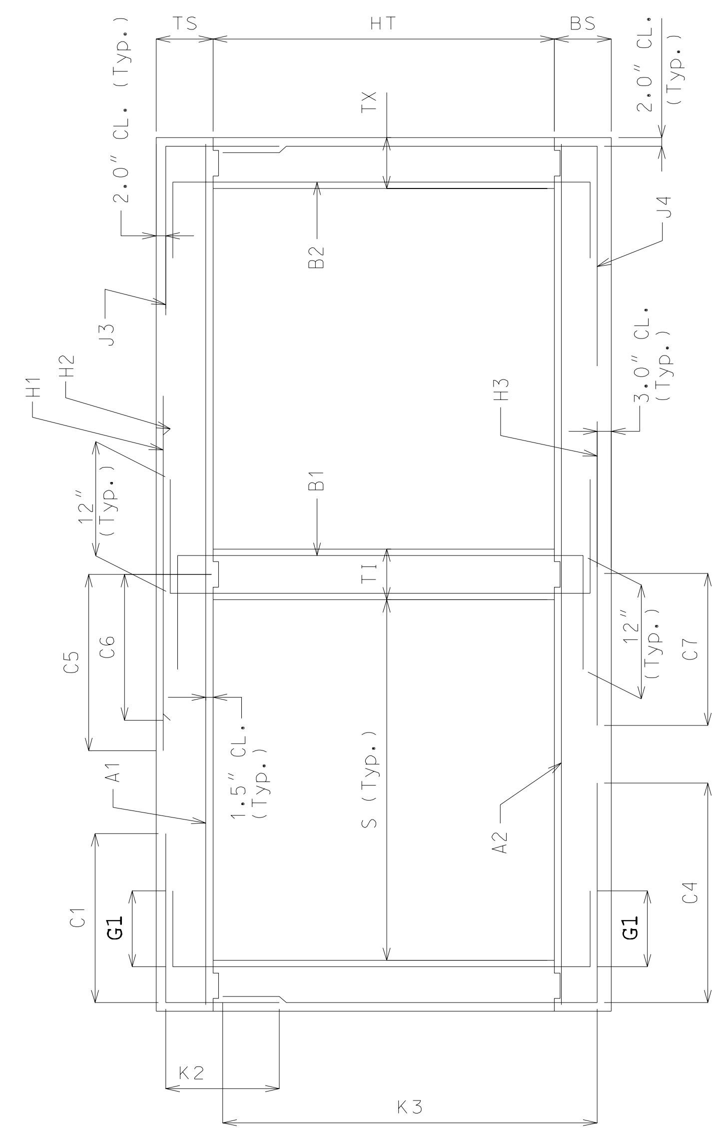

SECTION THRU BOX

NOTE: IF DESIGN FILL FALLS BETWEEN TABULATED FILLS, USE THE ADJACENT TABULATED FILL WHICH YIELDS THE GREATER MEMBER THICKNESS. IF THE MEMBER THICKNESSES ARE EQUAL, USE THE ADJACENT TABULATED FILL WHICH YIELDS THE GREATER AREA OF REINFORCEMENT.

SPECIAL DESIGNS ARE REQUIRED WHEN THE DESIGN FILL IS OUTSIDE THE RANGE OF TABULATED FILLS.

ALL DIMENSIONS ARE IN inch UNLESS OTHERWISE SPECIFIED.

COEFFICIENTS: DIMENSIONS MARKED WITH C# OR K# ARE THE PRODUCT OF THE COEFFICIENT AND ITS ASSOCIATED MULTIPLIER.

DESIGN FILL HEIGHT GIVEN IN THE TABLES IS THE HEIGHT FROM THE TOP OF THE EARTH FILL OR ROADWAY TO THE TOP OF THE TOP SLAB.

ALL CULVERTS MEET STRENGTH REQUIREMENTS FOR MILITARY 24 kips TANDEM AXLE LOADING.

MISSOURI HIGHWAY AND TRANSPORTATION COMMISSION

CONCRETE DOUBLE BOX CULVERT

MEMBER SIZES AND REINFORCEMENT

(HS20 & HS20 MOD. LOADING)

DATE: | EFFECTIVE: 04-01-2002 | **703.45B** | 12/13

Span (S) = 4.8 m; HT (m) = 3.9 or 4.2

Loading	DESIGN FILL (mm)	TS Thick	BS Thick.	TX Thick	TOP SLAB BARS A1 Size	A1 Bars c to c	J3 Size	J3 Bars c to c	BOTTOM SLAB BARS A2 Size	A2 Bars c to c	J4 Size	J4 Bars c to c	WALL BARS G1	B2 Size	B2 Bars c to c	F Size	F Bars c to c	COEFFICIENTS (see note) J4 K3	J4 C4	J3 K2	J3 C1	"C" Multiplier S = 4.8 m (mm)	"K" Multiplier HT = 3.9 m (mm)	"K" Multiplier HT = 4.2 m (mm)
MS18	200	300	350	275	22	190	19	200	22	170	19	190	300	16	300	13	350	0.95	0.38	0.22	0.49	5075	4425	4725
MS18	700	300	325	275	25	200	19	170	25	200	19	170	300	16	300	13	350	0.95	0.31	0.22	0.34	5075	4400	4700
MS18	1225	275	325	275	22	170	19	170	25	190	19	170	0	16	300	13	350	0.95	0.29	0.22	0.30	5075	4350	4675
MS18	1725	275	325	275	22	170	19	160	25	190	19	170	0	16	300	13	350	0.95	0.27	0.22	0.29	5075	4375	4675
MS18	2200	300	350	275	22	170	22	210	25	180	19	160	0	16	300	13	350	0.95	0.26	0.26	0.28	5075	4425	4725
MS18 MOD	150	350	375	275	22	180	19	210	22	160	19	180	300	16	300	13	350	0.94	0.38	0.23	0.59	5075	4500	4800
MS18 MOD	650	350	350	275	25	180	19	180	25	190	19	160	300	16	300	13	350	0.94	0.31	0.23	0.35	5075	4475	4775
MS18 MOD	1200	300	325	275	22	160	19	170	25	190	19	170	0	16	300	13	350	0.95	0.29	0.22	0.30	5075	4400	4700
MS18 MOD	1700	300	350	275	22	160	19	160	25	190	19	170	0	16	300	13	350	0.95	0.27	0.22	0.28	5075	4425	4725
MS18 MOD	2200	300	375	275	22	160	22	200	25	180	19	160	0	16	300	13	350	0.95	0.26	0.26	0.30	5075	4450	4750
MS18 or MS18 MOD	2675	325	375	275	25	200	22	190	25	170	22	200	0	16	300	13	350	0.94	0.27	0.26	0.29	5075	4475	4775
MS18 or MS18 MOD	3175	325	400	275	25	190	22	170	25	170	22	200	0	16	300	13	350	0.94	0.26	0.26	0.28	5075	4500	4800
MS18 or MS18 MOD	3650	350	425	300	25	190	22	180	25	170	22	200	0	16	300	13	350	0.94	0.26	0.27	0.28	5100	4550	4850
MS18 or MS18 MOD	4125	375	450	300	25	190	22	180	25	170	22	200	0	16	300	13	350	0.93	0.25	0.27	0.30	5100	4600	4900
MS18 or MS18 MOD	4600	400	475	325	25	190	22	180	25	170	22	200	0	16	300	13	350	0.93	0.25	0.27	0.30	5125	4650	4950
MS18 or MS18 MOD	5075	425	500	325	25	190	22	180	25	160	22	200	0	16	300	13	350	0.92	0.25	0.27	0.29	5125	4650	5000
MS18 or MS18 MOD	5575	425	500	350	25	190	22	180	25	160	22	200	0	16	300	13	350	0.92	0.25	0.27	0.30	5150	4700	5000
MS18 or MS18 MOD	6050	450	525	350	25	180	22	180	25	160	22	190	0	16	290	13	350	0.92	0.25	0.28	0.29	5150	4750	5050
MS18 or MS18 MOD	6525	475	550	375	25	180	22	180	25	160	22	200	0	16	300	13	350	0.92	0.25	0.28	0.29	5175	4800	5100
MS18 or MS18 MOD	7000	500	575	375	25	170	22	180	25	160	22	190	0	16	280	13	350	0.91	0.25	0.28	0.29	5175	4850	5150
MS18 or MS18 MOD	7475	525	600	375	25	170	22	170	29	190	22	190	0	16	240	13	350	0.91	0.24	0.28	0.29	5175	4900	5200
MS18 or MS18 MOD	7950	550	625	400	25	170	22	180	29	190	22	190	0	16	260	13	350	0.90	0.25	0.28	0.29	5200	4950	5250
MS18 or MS18 MOD	8425	575	650	400	25	160	22	180	29	190	22	190	0	16	230	13	350	0.90	0.24	0.29	0.28	5200	5000	5300
MS18 or MS18 MOD	8900	600	675	425	25	160	22	180	29	190	22	200	0	16	240	13	350	0.90	0.25	0.29	0.29	5225	5050	5350
MS18 or MS18 MOD	9375	625	700	425	25	160	22	170	29	180	22	200	0	16	230	13	350	0.90	0.24	0.29	0.29	5225	5075	5375

SPAN (S) = 4.8 m; HT (m) = 4.5 or 4.8

Loading	DESIGN FILL (mm)	TS Thick	BS Thick.	TX Thick	TOP SLAB BARS A1 Size	A1 Bars c to c	J3 Size	J3 Bars c to c	BOTTOM SLAB BARS A2 Size	A2 Bars c to c	J4 Size	J4 Bars c to c	WALL BARS G1	B2 Size	B2 Bars c to c	F Size	F Bars c to c	COEFFICIENTS (see note) J4 K3	J4 C4	J3 K2	J3 C1	"C" Multiplier S = 4.8 m (mm)	"K" Multiplier HT = 4.5 m (mm)	"K" Multiplier HT = 4.8 m (mm)
MS18	200	300	350	300	22	190	19	200	22	160	19	180	300	16	250	13	350	0.95	0.46	0.20	0.59	5100	5025	5325
MS18	700	300	350	300	25	200	19	170	25	190	19	160	300	16	250	13	350	0.95	0.38	0.20	0.41	5100	5000	5325
MS18	1225	275	325	300	22	180	19	170	25	200	19	160	0	16	240	13	350	0.96	0.34	0.19	0.35	5100	4975	5275
MS18	1725	275	350	300	22	180	19	160	25	190	19	160	0	16	240	13	350	0.96	0.32	0.19	0.32	5100	5000	5300
MS18	2200	300	375	300	22	170	22	210	25	180	22	190	0	16	240	13	350	0.95	0.32	0.23	0.31	5100	5025	5350
MS18 MOD	150	350	400	300	22	180	19	200	25	200	19	170	300	16	270	13	350	0.95	0.49	0.20	0.59	5100	5100	5425
MS18 MOD	650	350	375	300	25	190	19	170	25	190	19	160	300	16	260	13	350	0.94	0.38	0.20	0.46	5100	5100	5400
MS18 MOD	1200	300	350	300	22	160	19	170	25	190	19	160	0	16	240	13	350	0.95	0.34	0.20	0.35	5100	5000	5325
MS18 MOD	1700	300	350	300	22	170	19	160	25	180	22	210	0	16	240	13	350	0.95	0.34	0.20	0.33	5100	5025	5325
MS18 MOD	2200	300	375	300	22	160	22	200	25	180	22	200	0	16	240	13	350	0.95	0.32	0.23	0.33	5100	5050	5350
MS18 or MS18 MOD	2675	325	400	300	22	170	22	190	25	180	22	190	0	16	220	13	350	0.95	0.31	0.23	0.32	5100	5100	5400
MS18 or MS18 MOD	3175	325	425	325	22	160	22	190	25	170	22	190	0	16	240	13	350	0.95	0.30	0.23	0.32	5125	5100	5425
MS18 or MS18 MOD	3650	350	425	325	22	160	22	180	25	170	22	180	0	16	240	13	350	0.95	0.30	0.24	0.31	5125	5150	5450
MS18 or MS18 MOD	4125	375	450	350	25	200	22	180	25	170	22	180	0	16	250	13	350	0.94	0.29	0.24	0.33	5150	5200	5500
MS18 or MS18 MOD	4600	400	475	375	25	200	22	190	25	170	22	190	0	16	270	13	350	0.94	0.29	0.24	0.33	5175	5250	5550
MS18 or MS18 MOD	5075	425	500	375	25	190	22	180	25	170	22	180	0	16	250	13	350	0.93	0.29	0.24	0.33	5175	5300	5600
MS18 or MS18 MOD	5575	425	525	400	25	200	22	190	25	170	22	190	0	16	270	13	350	0.93	0.28	0.24	0.33	5200	5300	5625
MS18 or MS18 MOD	6050	450	550	400	25	190	22	180	25	160	22	180	0	16	240	13	350	0.93	0.28	0.25	0.32	5200	5350	5675
MS18 or MS18 MOD	6525	475	575	425	25	190	22	180	25	160	22	190	0	16	200	13	350	0.93	0.28	0.25	0.32	5225	5400	5725
MS18 or MS18 MOD	7000	500	600	425	25	180	22	170	25	160	22	180	0	16	220	13	350	0.92	0.28	0.25	0.32	5225	5450	5775
MS18 or MS18 MOD	7475	525	625	450	25	180	22	180	25	160	22	180	0	16	190	13	350	0.92	0.28	0.25	0.32	5250	5500	5825
MS18 or MS18 MOD	7950	550	625	450	25	170	22	170	29	190	22	170	0	16	210	13	350	0.92	0.28	0.25	0.32	5250	5550	5850
MS18 or MS18 MOD	8425	575	650	475	25	170	22	170	29	190	22	180	0	16	180	13	350	0.91	0.28	0.26	0.32	5275	5600	5900
MS18 or MS18 MOD	8900	600	675	475	25	170	22	170	29	190	22	170	0	16	200	13	350	0.91	0.28	0.26	0.31	5275	5650	5950
MS18 or MS18 MOD	9400	600	700	500	25	160	22	160	29	180	22	180	0	16	180	13	350	0.91	0.28	0.26	0.32	5300	5675	5975

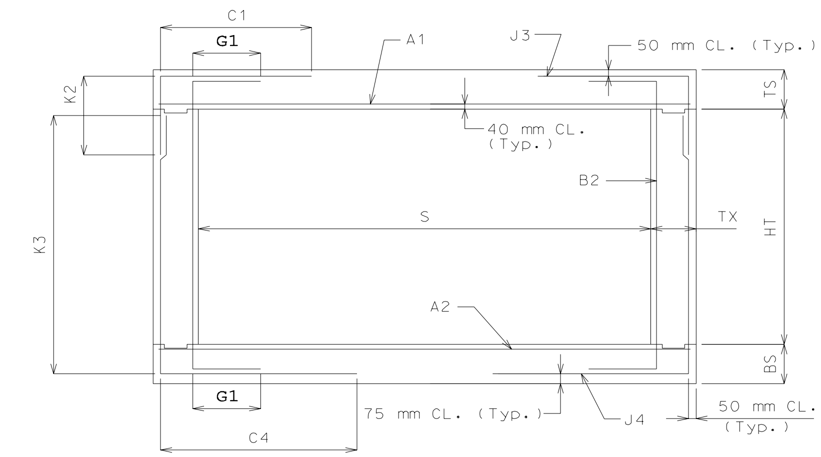

SECTION THRU BOX

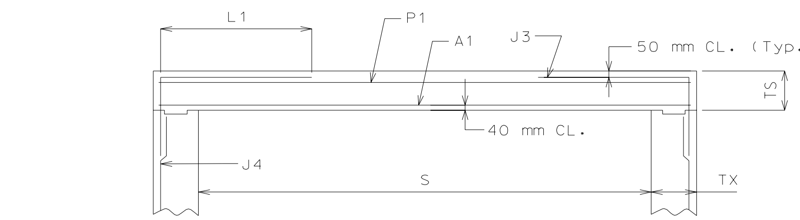

PART SECTION THRU BOX FOR MODIFIED J3 ALTERNATIVE
(B2 BAR NOT SHOWN FOR CLARITY)

NOTE: IF DESIGN FILL FALLS BETWEEN TABULATED FILLS, USE THE ADJACENT TABULATED FILL WHICH YIELDS THE GREATER MEMBER THICKNESS. IF THE MEMBER THICKNESSES ARE EQUAL, USE THE ADJACENT TABULATED FILL WHICH YIELDS THE GREATER AREA OF REINFORCEMENT.

SPECIAL DESIGNS ARE REQUIRED WHEN THE DESIGN FILL IS OUTSIDE THE RANGE OF TABULATED FILLS.

ALL DIMENSIONS ARE IN mm UNLESS OTHERWISE SPECIFIED.

COEFFICIENTS: DIMENSIONS MARKED WITH C# OR K# ARE THE PRODUCT OF THE COEFFICIENT AND ITS ASSOCIATED MULTIPLIER.

DESIGN FILL HEIGHT GIVEN IN THE TABLES IS THE HEIGHT FROM THE TOP OF THE EARTH FILL OR ROADWAY TO THE TOP OF THE TOP SLAB.

ALL CULVERTS MEET STRENGTH REQUIREMENTS FOR MILITARY 106 kN TANDEM AXLE LOADING.

AT CONTRACTOR'S OPTION, A MODIFIED J3 ALTERNATIVE MAY BE UTILIZED WHEN THE DISTANCE BETWEEN THE ENDS OF J3 BARS AT TOP SLAB IS LESS THAN 600 mm. J3 BARS WITH HORIZONTAL LENGTH L1 (Instead of C1) MUST BE USED, WHERE L1 IS EQUAL TO 450, 550, AND 700 mm FOR #13, #16, AND #19 BARS, RESPECTIVELY. ADDITIONAL P1 BAR IS REQUIRED WITH THE MODIFIED J3 ALTERNATIVE AND MUST BE OF THE SAME SIZE AND SPACING AS J3 BAR WITH A LENGTH EQUAL TO A1 BAR. NO ADDITIONAL PAYMENT WILL BE MADE FOR THIS SUBSTITUTION.

MISSOURI HIGHWAY AND TRANSPORTATION COMMISSION

CONCRETE SINGLE BOX CULVERT

MEMBER SIZES AND REINFORCEMENT

(MS18 & MS18 MOD LOADING)

DATE: | EFFECTIVE: 04-01-2002 | **M703.15C** | 13/13