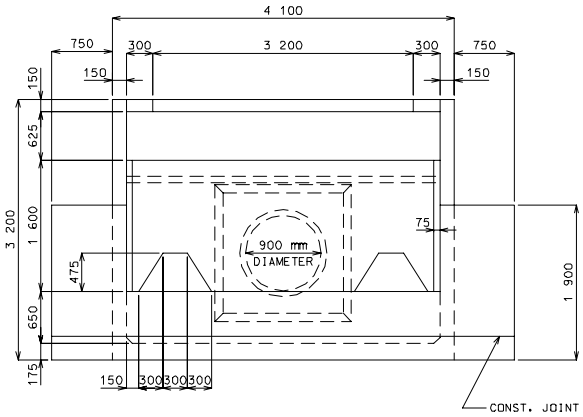

DOWNSTREAM ELEVATION

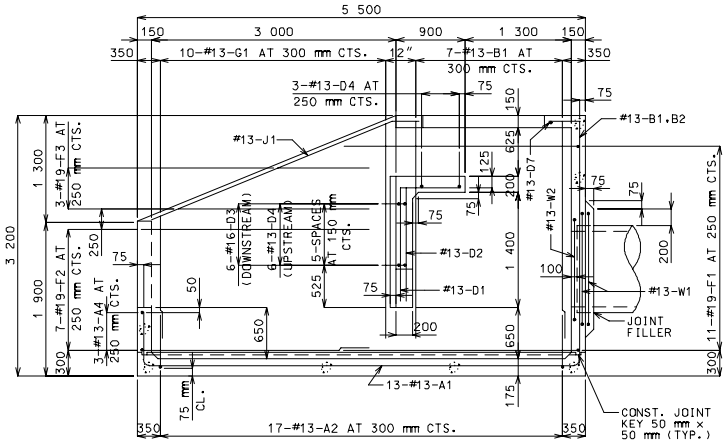

SECTION A – A

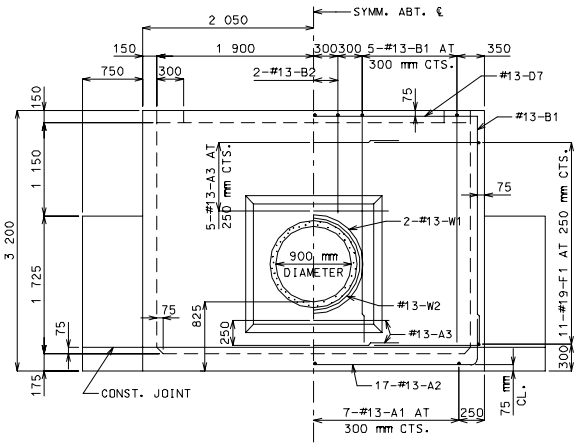

UPSTREAM ELEVATION

NOTE: BEND OR CUT A1 BARS IN FIELD TO CLEAR PIPE.

GENERAL NOTES:

DESIGN UNIT STRESSES

CLASS B CONCRETE f'c = 21 MPa
REINFORCING STEEL (GRADE 420) fy = 420 MPa

REINFORCING STEEL

MINIMUM CLEARANCE TO REINFORCING STEEL SHALL BE 40 mm UNLESS SHOWN OTHERWISE.

DIMENSIONS

ALL DIMENSIONS ARE SHOWN IN MILLIMETERS (mm) UNLESS OTHERWISE SPECIFIED.

DRAWINGS ARE NOT TO SCALE. FOLLOW DIMENSIONS.

ESTIMATED QUANTITIES		
ITEM		TOTAL
CLASS B CONCRETE	CU. m	12.9
REINFORCING STEEL	kg	852

COMPLETE BILL OF REINFORCING STEEL													
NO. REQ'D	SIZE	MARK NO.	SHAPE NO.	VARIES (V)	NO. EACH	DIMENSIONS B	C	D	E	F	H	K	NOMINAL LENGTH	ACTUAL LENGTH	WEIGHT
						mm	mm	mm	mm	mm	mm	mm	mm	mm	kg
13	#13 A1	11					700	5350	650				6700	6650	86
17	#13 A2	11					650	3950	650				5250	5200	88
7	#13 A3	20				2200							2200	2200	15
3	#13 A4	20				4850							4850	4850	14
24	#13 B1	19				2825	325						3150	3125	75
3	#13 B2	19				1300	300						1600	1575	5
13	#13 D1	19				1425	775						2200	2175	28
13	#13 D2	20				1425							1425	1425	18
6	#16 D3	20				3950							3950	3950	37
9	#13 D4	11					300	3950	300				4550	4500	40
4	#13 D5	14				300	200	1305			1100	700	1805	1750	7
2	#13 D6	15				1305	1650	1305	1100	700	1100	700	4260	4250	8
1	#13 D7	20				4000							4000	4000	4
6	#13 E1	20				1775							1775	1775	11
2	#13 E2	15				390	1800				275	275	2190	2175	4
2	#13 E3	20				1150							1150	1150	2
22	#19 F1	19				3000	1400						4400	4350	214
14	#19 F2	19				2800	775						3575	3525	110
6	#19 F3	20	V	2		1050							1050	1050	
						2350	(INCREMENT = 650 mm)						2350	2350	23
20	#13 G1	20	V	2		1675							1675	1675	
						2750	(INCREMENT = 120 mm)						2750	2750	44
2	#13 J1	20				3900							3900	3900	8
2	#13 W1	16				1200							4105	4105	8
1	#13 W2	16				1000							3480	3480	3

BENDING DIAGRAMS

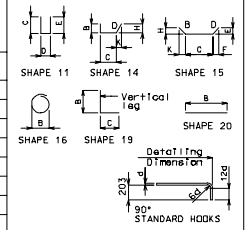

ALL STANDARD HOOKS AND BENDS OTHER THAN 180 DEG. TO BE BENT WITH SAME PROCEDURE AS FOR 90 DEG. STANDARD HOOKS.

HOOKS AND BENDS SHALL BE IN ACCORDANCE WITH THE PROCEDURES AS SHOWN ON THIS SHEET.

NOMINAL LENGTHS ARE BASED ON OUT TO OUT DIMENSIONS SHOWN IN BENDING DIAGRAMS AND ARE LISTED FOR FABRICATORS USE.

PAYWEIGHTS ARE BASED ON ACTUAL LENGTHS.

LENGTH = TOTAL LENGTHS ARE MEASURED ALONG CENTERLINE BAR TO THE NEAREST 25 mm.

V – BAR DIMENSIONS VARY IN EQUAL INCREMENTS BETWEEN DIMENSIONS SHOWN ON THIS LINE AND THE FOLLOWING LINE.

NO.EA. = NUMBER OF BARS OF EACH LENGTH.

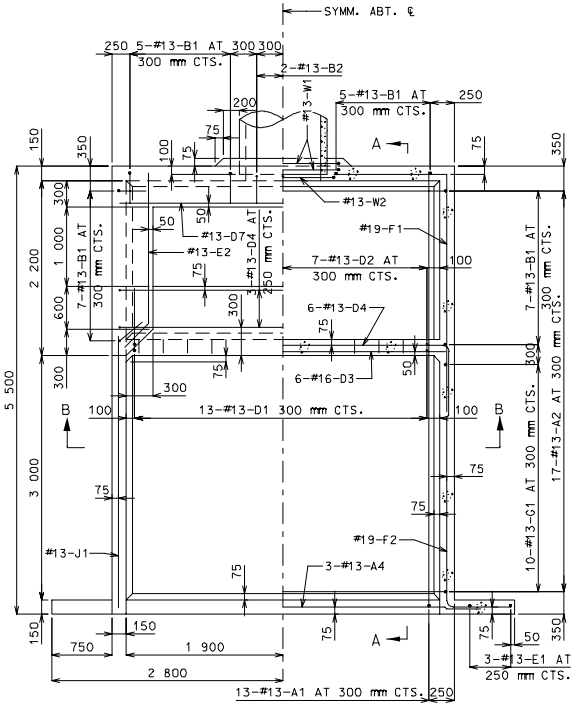

HALF PLAN HALF HORIZONTAL SECTION

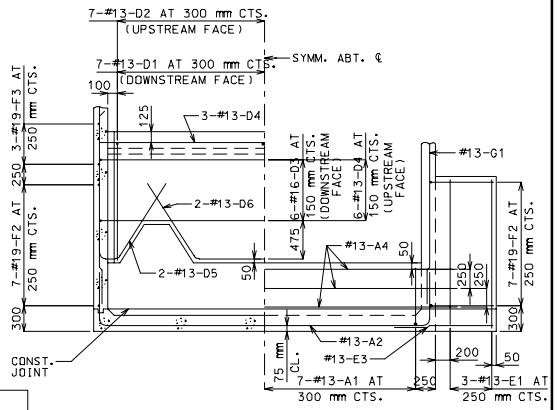

HALF SECTION B-B HALF ELEVATION OF LOWER BAFFLE AND WING

NOTE: BEND OR CUT D1 AND D2 BARS IN FIELD TO CLEAR NOTCH IN BAFFLE WALL.

MISSOURI HIGHWAY AND TRANSPORTATION COMMISSION

PIPE CULVERT HEADWALL
ENERGY DISSIPATOR (IMPACT TYPE) FOR 900 mm CONCRETE PIPE

DATE _____ EFFECTIVE: 07-01-2001 M604.13E 1/1