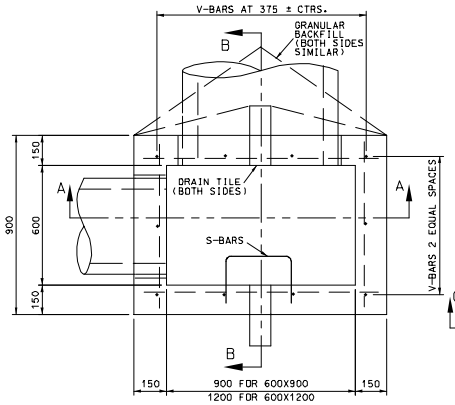

INLET PLAN

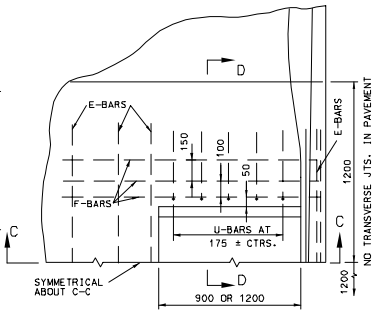

HALF-PLAN

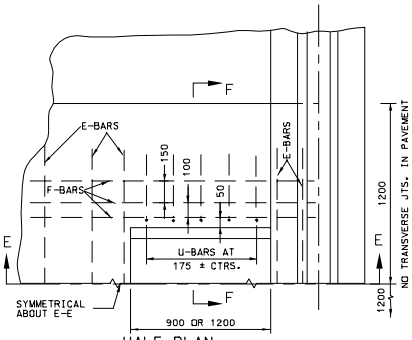

HALF-PLAN

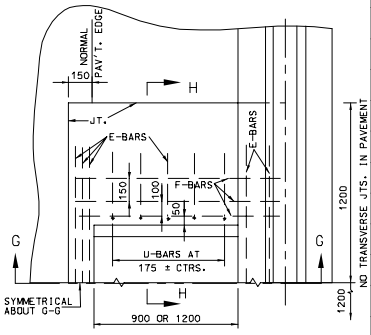

HALF-PLAN

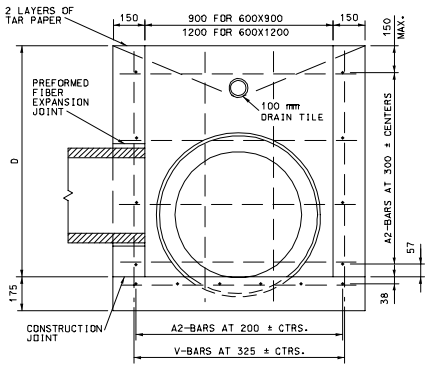

SECTION A-A

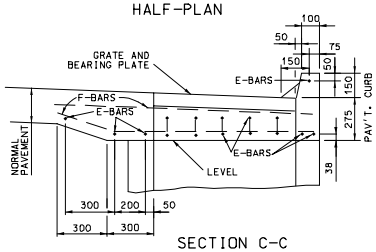

SECTION C-C

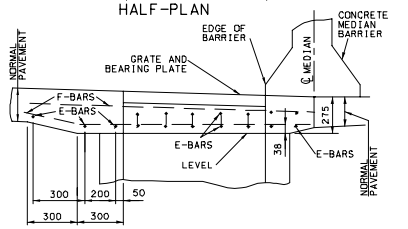

SECTION E-E

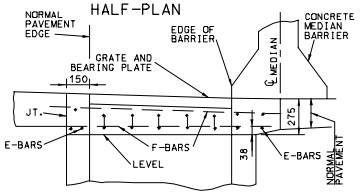

SECTION G-G

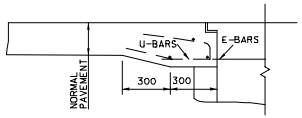

HALF-SECTION D-D

CASE 1

INLET ADJACENT TO CURB

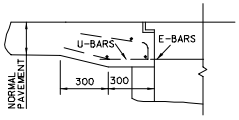

HALF-SECTION F-F

CASE 2

DISTANCE BETWEEN BARRIER & PAVEMENT EDGE GREATER THAN INLET WIDTH

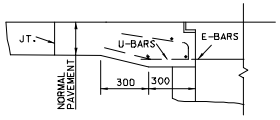

HALF-SECTION H-H

CASE 3

DISTANCE BETWEEN BARRIER & PAVEMENT EDGE EQUAL TO INLET WIDTH

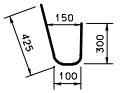

U-BARS

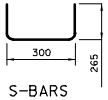

S-BARS

BENDING DIAGRAMS

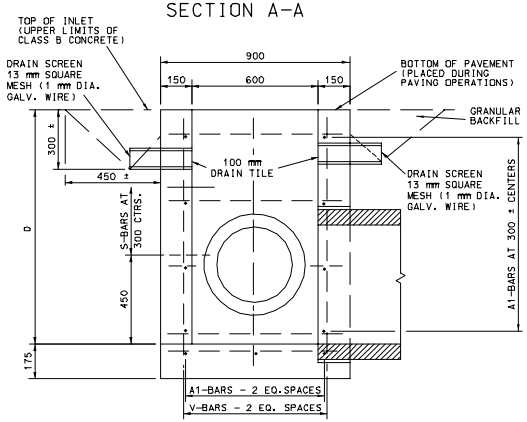

SECTION B-B

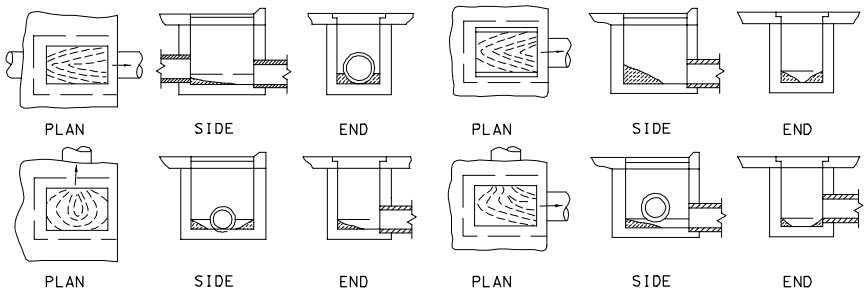

TYPICAL INVERTS

(TO BE PLACED AFTER INLET IS CONSTRUCTED)

QUANTITIES			
"D" mm		600X900	600X1200
525	C	0.58	0.68
	S	22	25
600	C	0.62	0.72
	S	27	31
750	C	0.70	0.82
	S	28	33
900	C	0.79	0.91
	S	33	40
1050	C	0.87	1.01
	S	35	41
1200	C	0.95	1.10
	S	40	48
1350	C	1.03	1.20
	S	47	55
1500	C	1.11	1.29
	S	55	63
1650	C	1.19	1.39
	S	58	67
1800	C	1.27	1.48
	S	63	73
1950	C	1.35	1.57
	S	66	77
2100	C	1.43	1.67
	S	72	83
ADD 0.11 m^3 CONCRETE FOR INVERT			

PAVEMENT BAR BILL AND STEEL ADDITIONS				
BOX SIZE ADD'L STEEL	MARK	NO.	LENG.	ADD STEEL Kg
CASE 1 600 X 900	E	6	1800	29
	F	6	1650	
	U	10	825	
CASE 1 600 X 1200	E	6	1800	34
	F	6	1950	
	U	14	825	
CASE 2 600 X 900	E	7	1800	31
	F	6	1800	
	U	10	825	
CASE 2 600 X 1200	E	7	1800	37
	F	6	2100	
	U	14	825	
CASE 3 600 X 900	E	7	1800	28
	F	6	1275	
	U	10	825	
CASE 3 600 X 1200	E	7	1800	33
	F	6	1575	
	U	14	825	

BAR BILL FOR INLET					
"D" mm	MARK	600 X 900		600 X 1200	
		NO.	LENGTH	NO.	LENGTH
525	A1	7	1125	7	1425
	A2	10	825	10	825
	V	10	600	12	600
600	A1	9	1125	9	1425
	A2	12	825	13	825
	V	10	675	12	675
750	A1	9	1125	9	1425
	A2	12	825	13	825
	V	10	825	12	825
900	A1	11	1125	11	1425
	A2	14	825	15	825
	V	10	975	12	975
1050	A1	11	1125	11	1425
	A2	14	825	15	825
	V	10	1125	12	1125
1200	A1	13	1125	13	1425
	A2	16	825	17	825
	V	10	1275	12	1275
1350	A1	13	1125	13	1425
	A2	16	825	17	825
	V	10	1425	12	1425
	S	3	825	3	825
1500	A1	15	1125	15	1425
	A2	18	825	19	825
	V	10	1575	12	1575
	S	4	825	4	825
1650	A1	15	1125	15	1425
	A2	18	825	19	825
	V	10	1725	12	1725
	S	5	825	5	825
1800	A1	17	1125	17	1425
	A2	20	825	21	825
	V	10	1875	12	1875
	S	5	825	5	825
1950	A1	17	1125	17	1425
	A2	20	825	21	825
	V	10	2025	12	2025
	S	6	825	6	825
2100	A1	19	1125	19	1425
	A2	22	825	23	825
	V	10	2175	12	2175
	S	6	825	6	825

CONCRETE DEDUCTION FOR PIPE OPENING(m^3)					
300	375	450	600	750	900
0.02	0.03	0.04	0.07	0.10	0.14

A1, A2, V, E, F & U-BARS.....#13
S-BARS.....#19

GENERAL NOTES:

ALL DIMENSIONS ARE IN mm UNLESS OTHERWISE NOTED.

REINFORCING BARS SHALL BE CUT AND/OR BENT AT PIPE OPENINGS. REINFORCING BARS IN PAVEMENT SHALL BE SECURELY TIED TOGETHER AND FASTENED TO AVOID DISPLACEMENT DURING PAVING OPERATIONS. REINFORCING SHOWN IS IN ADDITION TO ANY REINFORCING IN THE CONCRETE PAVEMENT.

MISSOURI HIGHWAY AND TRANSPORTATION COMMISSION

DROP INLET

TYPE B

DATE: _____ EFFECTIVE: 05-01-1997 M604.20B 1/1