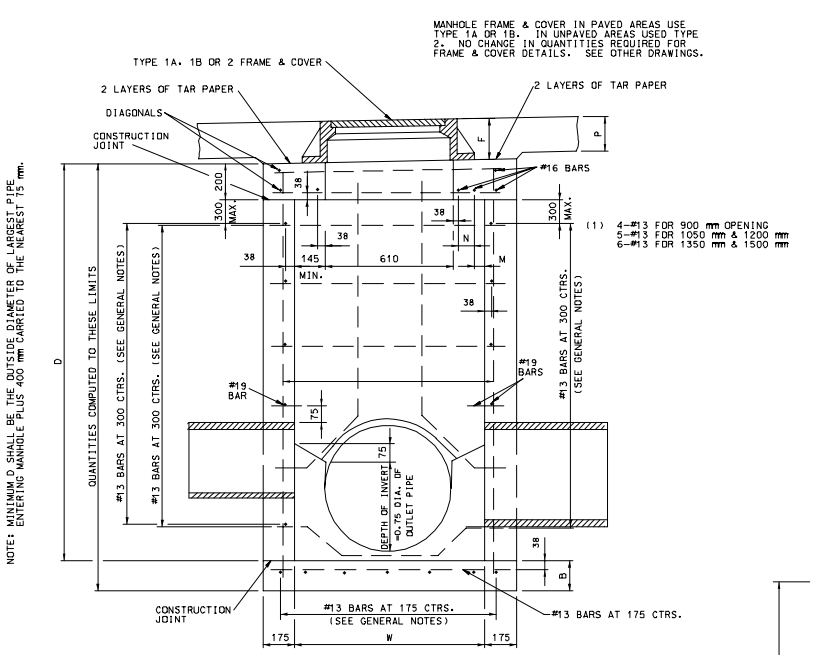

SECTION A-A

VARIABLE DIMENSIONS					
SIZE OF PIPE	W	T	B	M	N
≤ 600	900	1250	175	VARIABLE	65
750	1050	1400	175		140
900	1200	1550	175		200
1050	1350	1700	200		140*
1200	1500	1850	200		175*
* 4-#16 BARS ADDED					

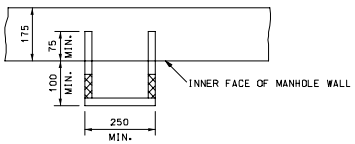

STEPS SHALL BE SET LEVEL AND IN VERTICAL ALIGNMENT.

NO DIRECT PAYMENT WILL BE MADE FOR MANHOLE STEPS.

STEP INSTALLATION

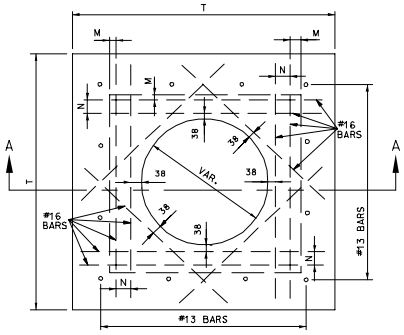

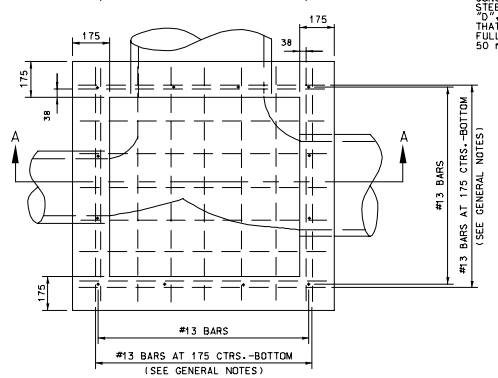

QUANTITIES								
		TO & INCLUDING 6.0 m DEPTH				6.0 m TO & INCLUDING 9.0 m DEPTH		
SIZE (W)		D=900	D=1200	ADD OR SUBTRACT FOR EACH 300 mm	ADD OR SUBTRACT FOR EACH 50 mm	ADD OR SUBTRACT FOR EACH 250 mm	ADD OR SUBTRACT FOR EACH 50 mm	ADDITIONAL STEEL IN BOTTOM DIFF. IN #13 & #19 BARS
900 X 900	C	1.16	1.39	0.225	0.038	0.225	0.038	
	S	64.3	72.6	8.3	0.6	10.3	0.6	20.4
900 X 1050	C	1.27	1.51	0.241	0.040	0.241	0.040	
	S	70.0	79.2	9.2	0.7	11.2	0.7	23.2
900 X 1200	C	1.38	1.64	0.257	0.043	0.257	0.043	
	S	73.7	83.2	9.5	0.7	11.7	0.7	25.9
900 X 1350	C	1.54	1.81	0.273	0.046	0.273	0.046	
	S	87.1	97.5	10.4	0.8	12.7	0.8	28.7
900 X 1500	C	1.65	1.94	0.288	0.048	0.288	0.048	
	S	89.7	100.3	10.6	0.8	13.1	0.8	30.0
1050 X 1050	C	1.39	1.64	0.257	0.043	0.257	0.043	
	S	76.0	86.0	10.0	0.8	12.2	0.8	26.3
1050 X 1200	C	1.50	1.78	0.273	0.046	0.273	0.046	
	S	80.0	90.4	10.4	0.8	12.7	0.8	29.4
1050 X 1350	C	1.68	1.97	0.288	0.048	0.288	0.048	
	S	94.7	105.9	11.2	0.9	13.6	0.9	32.6
1050 X 1500	C	1.80	2.10	0.304	0.051	0.304	0.051	
	S	97.4	108.9	11.5	0.9	14.1	0.9	34.1
1200 X 1200	C	1.63	1.91	0.288	0.048	0.288	0.048	
	S	84.4	95.0	10.6	0.8	13.1	0.8	32.9
1200 X 1350	C	1.82	2.12	0.304	0.051	0.304	0.051	
	S	100.2	111.8	11.6	0.9	14.1	0.9	36.5
1200 X 1500	C	1.95	2.27	0.320	0.053	0.320	0.053	
	S	103.1	114.9	11.8	0.9	14.6	0.9	38.1
1350 X 1350	C	1.95	2.28	0.320	0.053	0.320	0.053	
	S	117.9	130.3	12.4	1.0	15.1	1.0	40.3
1350 X 1500	C	2.09	2.43	0.336	0.056	0.336	0.056	
	S	121.8	134.5	12.7	1.0	15.5	1.0	42.2
1500 X 1500	C	2.24	2.59	0.351	0.058	0.351	0.058	
	S	125.8	138.8	13.0	1.0	16.0	1.0	44.1

FOR PIPE OPENINGS								
	PIPE SIZES							
	300	375	450	600	750	900	1050	1200
m^3 CONC TO DEDUCT	0.02	0.03	0.05	0.08	0.12	0.17	0.22	0.29
ADDITIONAL STEEL REQUIRED FOR PIPE OPENING								
WIDTH OF WALL REQUIRED FOR PIPE				900	1050	1200	1350	1500
LENGTH OF #19 BAR REQUIRED				1200	1350	1500	1650	1800
WEIGHT OF BAR kg				2.68	3.02	3.35	3.69	4.02

NOTE:
CONCRETE QUANTITIES IN TABLE INCLUDE INVERT. THE QUANTITY OF STEEL FOR 50 mm OF "D" IS NOT ONE-SIXTH OF THAT FOR 300 mm OF "D". NEITHER IS THE QUANTITY FOR 150 mm OF "D" EQUAL TO HALF THAT FOR 300 mm OF "D". SO USE QUANTITY IN 300 mm COLUMN FOR FULL 300 mm INCREMENTS AND IN 50 mm COLUMN FOR FRACTIONAL 50 mm INCREMENTS.

TO AND INCLUDING 6.0 m DEPTH

NOTE:
TO COMPUTE THE QUANTITIES FOR "D"s NOT SHOWN. REFER TO TABLE FOR THE SIZE OF MANHOLE REQUIRED. THEN TO THESE QUANTITIES ADD THE QUANTITIES SHOWN FOR 300 mm TIMES THE NUMBER OF FULL 300 mm INCREMENTS IN THE ADDITIONAL "D" REQUIRED. THEN ADD THE QUANTITIES GIVEN FOR 50 mm TIMES THE NUMBER OF 50 mm INCREMENTS IN THE REMAINING mm OF "D".

FOR EXAMPLE: QUANTITIES FOR 900 X 1200 MANHOLE WITH 2.0 m "D" HAVING 1-450, 1-600 & 1-900 PIPE OPENINGS ARE DETERMINED AS FOLLOWS:

"D" REQUIRED = 2.0 m
"D" GIVEN IN TABLE = 1.2 m
"D" ADDITIONAL = 0.8 m

FROM TABLE FOR 1200 mm "D"	1.64	83.2
ADD (2 X QUANTITIES FOR 300 mm)	0.51	19.0
ADD (200 = 4 X 50) (4 X QUANTITIES FOR 50 mm)	0.17	2.8
GROSS	2.32	105.0
DEDUCT CONCRETE FOR THE PIPE OPENINGS	0.30	
ADD STEEL FOR PIPE OPENING 2-900 & 1-1200 WALLS		8.7
TOTAL	2.02	113.7
USE	2.0 m^3	114 kg

MORE THAN 6.0 m TO AND INCLUDING 9.0 m DEPTH

FIRST. COMPUTE QUANTITIES FOR 6.0 m DEPTH FROM THE TABLE "TO AND INCLUDING 6.0 m DEPTHS"

FOR EXAMPLE: QUANTITIES FOR 900 X 1200 MANHOLE WITH 6.0 m "D" HAVING 1-450, 1-600 AND 1-900 PIPE OPENINGS ARE DETERMINED AS FOLLOWS:

"D" REQUIRED = 6.0 m
"D" GIVEN IN TABLE = 1.2 m
"D" ADDITIONAL = 4.8 m

FROM TABLE FOR 1200 mm "D"	1.64	83.2
ADD (16 X QUANTITIES FOR 300 mm)	4.11	152.0
GROSS	5.75	235.2
DEDUCT CONCRETE FOR THE PIPE OPENINGS	0.30	
ADD STEEL FOR PIPE OPENING 2-900 & 1-1200 WALLS		8.7
SUB-TOTAL (6.0 m DEPTH)	5.45	243.9

SECOND. COMPUTE QUANTITIES FOR DEPTHS BEYOND 6.0 m TO A MAXIMUM OF 9.0 m USING THE TABLE "6.0 m TO AND INCLUDING 9.0 m DEPTH" AND ADD TO THE QUANTITIES FOR 6.0 m DEPTH. ALSO ADD THE DIFFERENCE IN STEEL IN THE BOTTOM DUE TO AN INCREASE IN SIZE OF BARS FROM #13 TO #19 BARS ON 175 mm CENTERS.

FOR EXAMPLE:

"D" REQUIRED = 9.0 m
"D" COMPUTED = 6.0 m
"D" ADDITIONAL = 3.0 m

QUANTITIES FOR "D" = 6.0 m	5.45	243.9
ADD (12 X QUANTITIES FOR 250 mm)	3.08	140.4
ADD STEEL (ADDITIONAL STEEL IN BOTTOM)		25.9
TOTAL (9.0 m DEPTH)	8.53	410.2
USE	8.5 m^3	410 kg

GENERAL NOTE:

ALL DIMENSIONS SHOWN ARE IN mm UNLESS OTHERWISE NOTED.

THE MAXIMUM DEPTH OF MANHOLE USING #13 HORIZONTAL BARS AT 300 mm CENTERS IS 6.0 m.

OVER 6.0 m DEPTH, HORIZONTAL BARS SHALL BE INCREASED TO A #16 BAR AT 250 mm CENTERS TO A MAXIMUM DEPTH OF 9.0 m.

OVER 9.0 m DEPTH WILL REQUIRE A SPECIAL DESIGN.

BOTTOM STEEL AT MORE THAN 6.0 m DEPTH TO A MAXIMUM DEPTH OF 9.0 m IS INCREASED TO #19 BARS AT 175 mm CENTERS.

MISSOURI HIGHWAY AND TRANSPORTATION COMMISSION

CONCRETE MANHOLES

DATE: _____ EFFECTIVE: 05-01-1997 M604.30F 1/1