LRFD

Section 3.35

New: April 2005

CLICK HERE TO Index

3.35.1 General
1.1 General
1.2 Expansion and Contraction Length
1.3 Expansion Device on Skewed Curved Structures
1.4 Details of Substructure Protection

3.35.2 Silicone Expansion Joint Sealant
2.1 General
2.2 Steel Structure Details at End Bents
2.3 Steel Structure Details at Intermediate Bents
2.4 Prestressed Structure Details at End Bents
2.5 Barrier Curb Details
2.6 Safety Barrier Curb at End Bents
2.7 Double Faced Median Barrier Bridge Curb
2.8 Polymer Concrete

3.35.3 Preformed Compression Joint Seal
3.1 General
3.2 Steel Structure Details
3.3 Prestressed Structure Details
3.4 Barrier Curb Details
3.5 Sidewalk Details
3.6 Double Faced Median Barrier Bridge Curb

3.35.4 Strip Seal Expansion Joint System
4.1 General
4.2 Gland Extrusion Details
4.3 Joint System Details (Steel Structures) at End Bent
4.4 Joint System Details (Prestressed Structures) at End Bents
4.5 Barrier Curb Details
4.6 Double Faced Median Barrier Curb Details
4.7 Sidewalk Details
4.8 Drainage Details
4.9 Polymer Concrete

3.35.5 Flat Plate Expansion Devices
5.1 General
5.2 Steel Structure Details
5.3 Prestressed Structure Details
5.4 Typical Part Plan Details
5.5 Typical Aligning Bolt and Bevel Plate Details
5.6 Typical Permissible Field Splice Details
5.7 Plan of Beam at Bearings
5.8 Barrier Curb Details
5.9 Miscellaneous Details

3.35.6 Finger Plate Expansion Devices
6.1 General
6.2 Details at End Bent
6.3 Typical Plan of Plate
6.4 Barrier Curb Details
6.5 Median Barrier Curb Details

3.35.1 General

The number of movable deck joints in a structure should be minimized. Deck joints should be avoided over roadways, railroads, sidewalks, other public areas, and at the low point of sag vertical curves.

Consult the Structural Project Manager, if the use of special covering floor plates in shoulder areas should be considered.

If no expansion device is specified in the Design Layout, but due to the length of structure an expansion device is required, consult the Structural Project Manager for the type to be used.

The roadway surface gap, W, (Except Flat and Finger Plates) in a transverse deck joint, measured in the direction of travel shall satisfy:

LRFD 14.5.3.2 For single gaps:

$1" \leq W \leq 4"$

EXPANSION JOINT SELECTION		
	Allowable Movement	Allowable Skew
Silicone Expansion Joint Sealant	0 – 2"	$\leq 20°$
Preformed Compression Joint Seal	0 – 2"	$\leq 20°$
Strip Seals	2" to 4"	$\leq 45°$
Flat Plate		$> 45°$
Finger Plate	See LRFD DG Sec. 3.35.6.1	

Movement Calculation (in the direction of travel)

Δ = (coefficient)(temperature range)(actual expansion length)

Coefficients, (α)

Steel: Thermal - 0.0000065 ft/ft/^{o}F
Concrete: Thermal - 0.0000060 ft/ft/^{o}F

Temperature Range From 60^{0}F

Temperature Range is based on a design installation temperature of 60°F.

	Rise	Fall	Range
Steel Structures	60°F	90°F	150°F (From -30° to 120°)
Concrete Structures	50°F	70°F	120°F (From -10° to 110°)

Actual Expansion Length, (L)

See Page 1.2-1

When Expansion joints are used for long span structures with deep girders, movement calculations should also consider the bearings and possible resulting girder rotation.

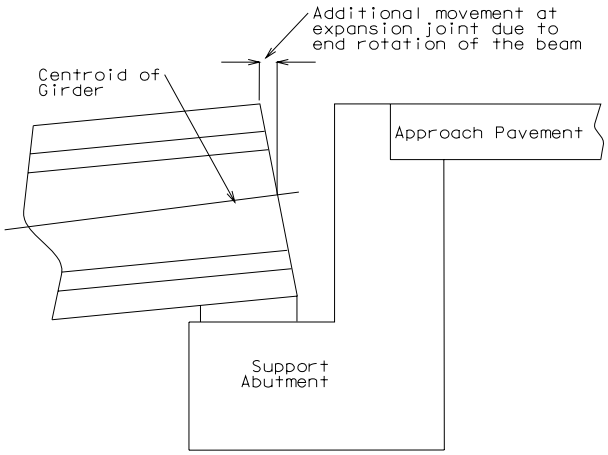

Installation Width

The installation width, gap, should be adjusted for temperatures above or below the design installation temperature. Movement for a 10°F change in temperature should be indicated on the plans to the nearest 1/16" by using the appropriate note in Section 4.0.

Movement for 10°F change in temperature = $(\alpha)(10°F)(L)(\cos \theta)$

1.2 Expansion and Contraction Lengths

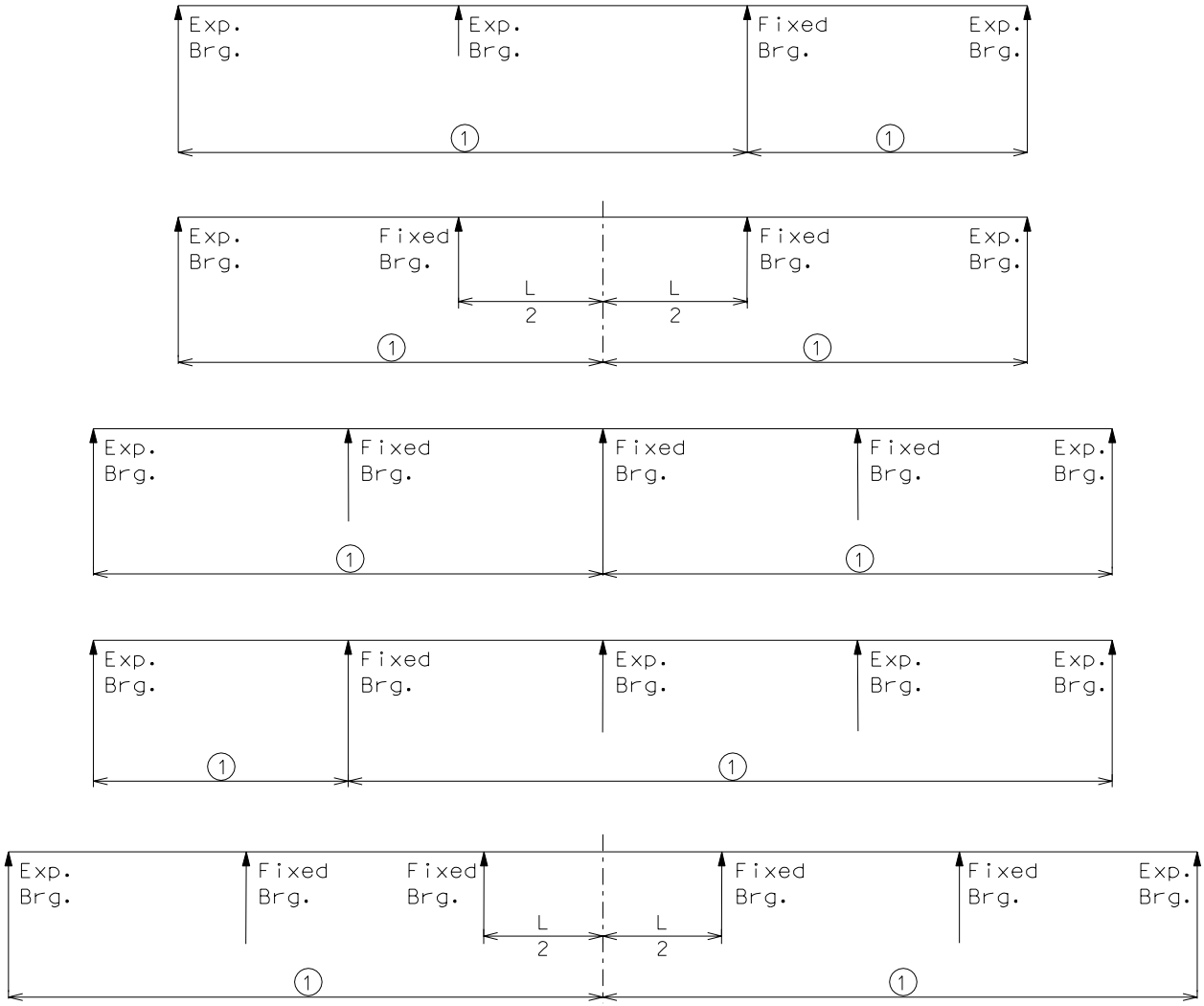

Note:

1 = Expansion and contraction length.

For configurations not shown, a temperature force distribution analysis may be necessary to estimate the point of thermal origin.

1.3 Expansion Device on Skewed Curved Structures

Add the **"Section Thru Centerline Expansion Gap"** and the **Table** shown below to the Expansion Device sheet for skewed curved structures.

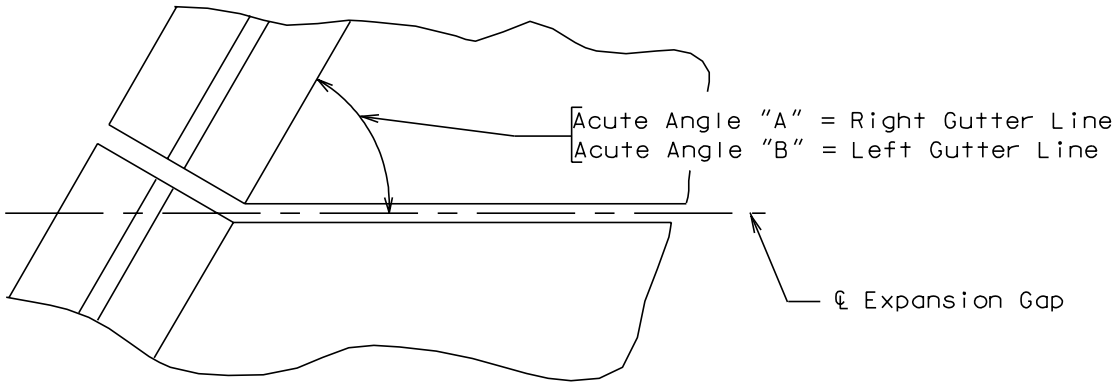

PART PLAN

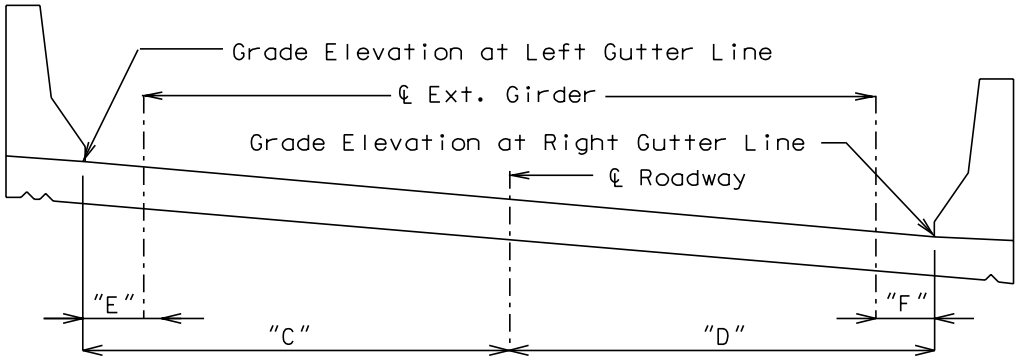

SECTION THRU ℄ EXPANSION GAP

BENT NO.	GRADE ELEVATION			ANGLE		HORIZONTAL DIMENSION			
	LEFT GUTTER LINE	℄ RDWY.	RIGHT GUTTER LINE	"A"	"B"	"C"	"D"	"E"	"F"

1.4 Details of Substructure Protection

A protective coating shall be applied to concrete surfaces exposed to drainage from the roadway. Indicate surface to be coated on plans. Urethane resembles black tar which is used where aesthetics is not a concern, otherwise use epoxy.

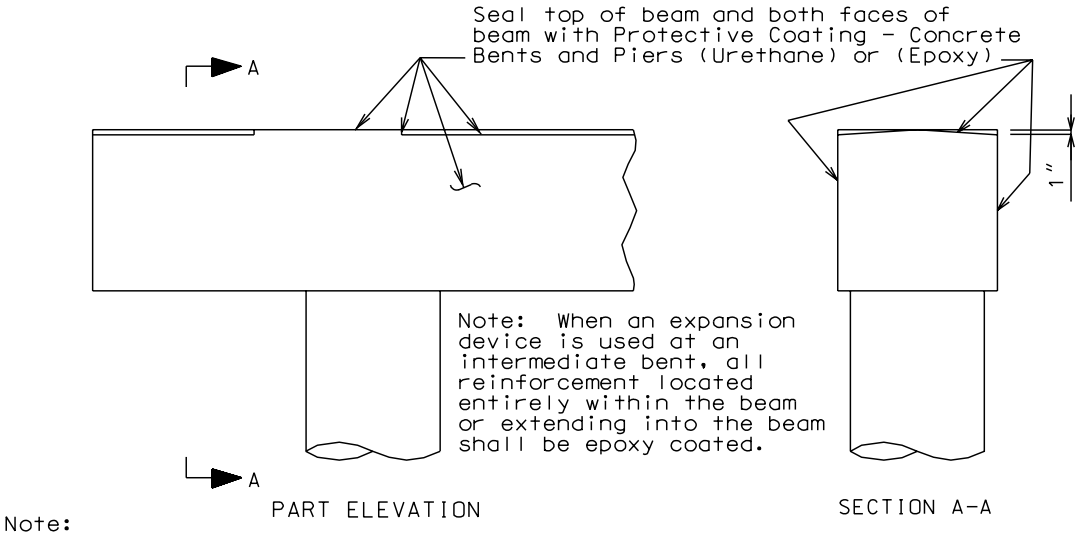

Note:
Slope beam cap to drain between bearings.
See appropriate section for bar size and details not shown.

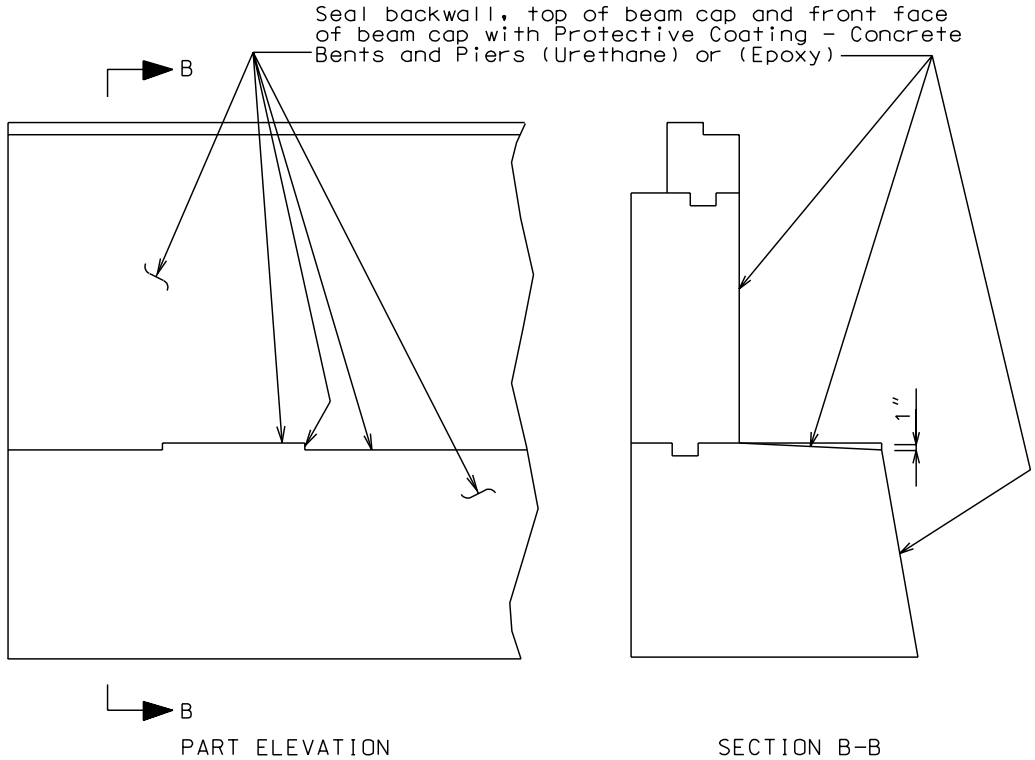

Note: Epoxy coat all reinforcement in end bents with expansion joint system.

3.35.2 Silicone Expansion Joint Sealant

2.1 General

Silicone Expansion Joint Sealant is an economical system and should be used for movements up to 2″ with skews ≤ 20°.

This system is preferred by maintenance because it is easily replaced if necessary.

TRANSVERSE BRIDGE SEALANT DIMENSIONS

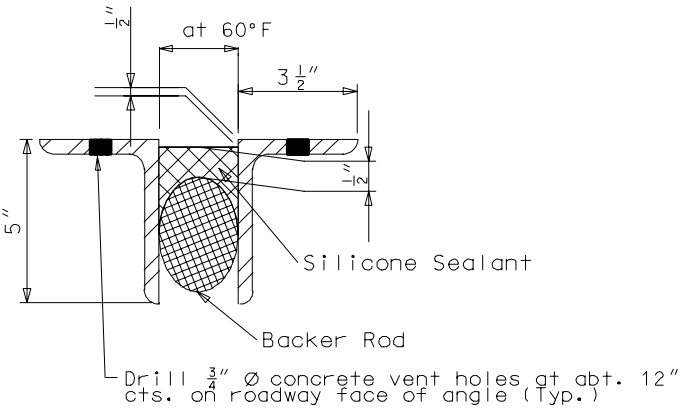

PART CROSS SECTION THRU EXPANSION JOINT

Minimum thickness of angle shall be 1/2″.

Note: See LRFD DG Sec. 4.0 for appropriate notes.

DETAILS AT END BENTS (STEEL STRUCTURES) Silicone Expansion Joint Sealant

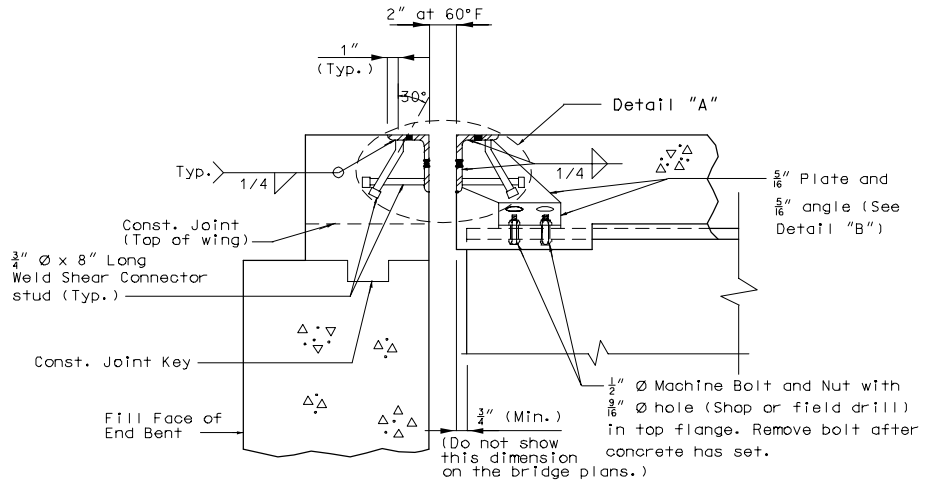

SECTION B-B

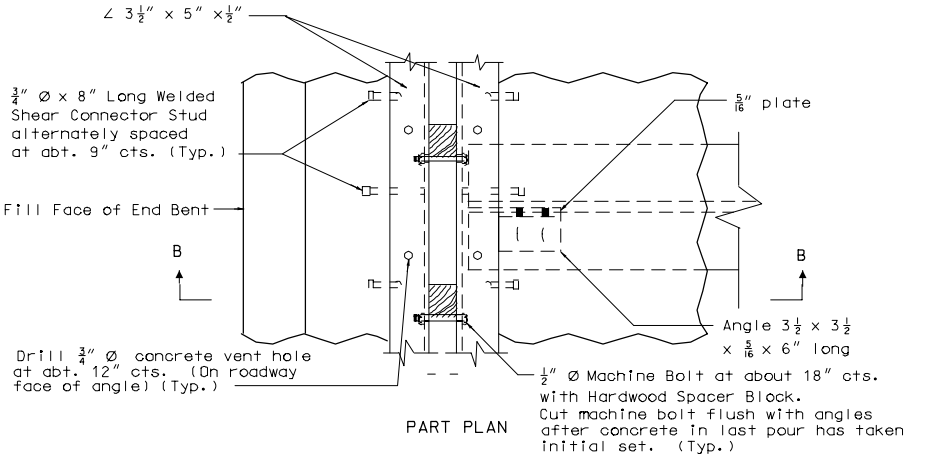

PART PLAN

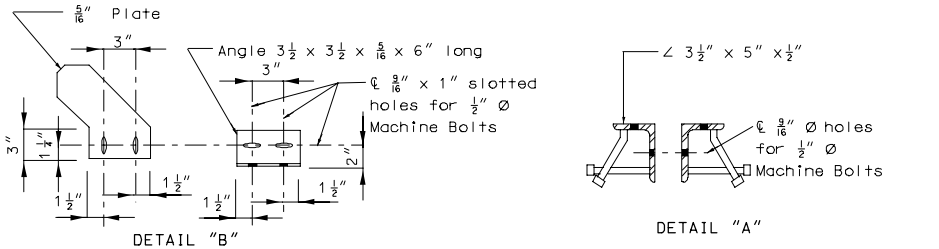

DETAIL "B" DETAIL "A"

DETAILS AT INTERMEDIATE BENTS (STEEL STRUCTURES) Silicone Expansion Joint Sealant

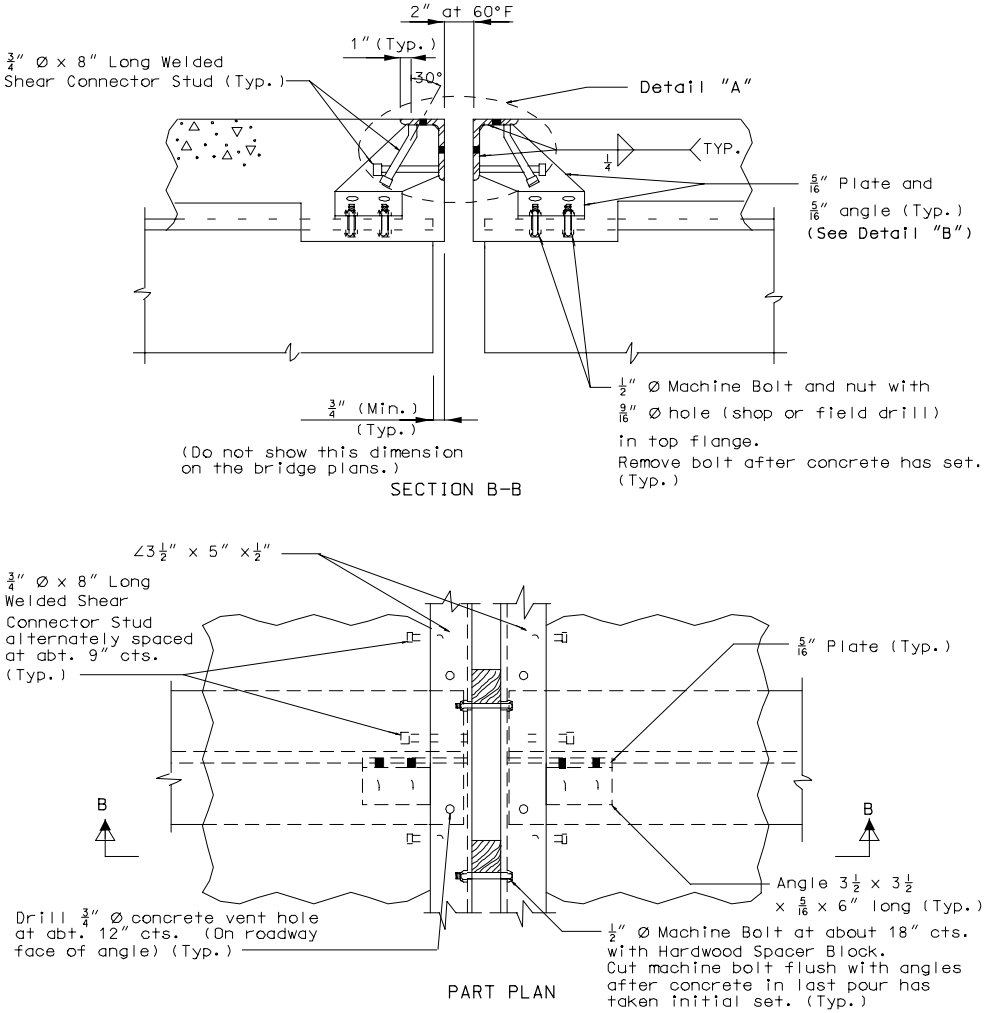

DETAILS AT END BENTS (PRESTRESSED STRUCTURES) Silicone Expansion Joint Sealant

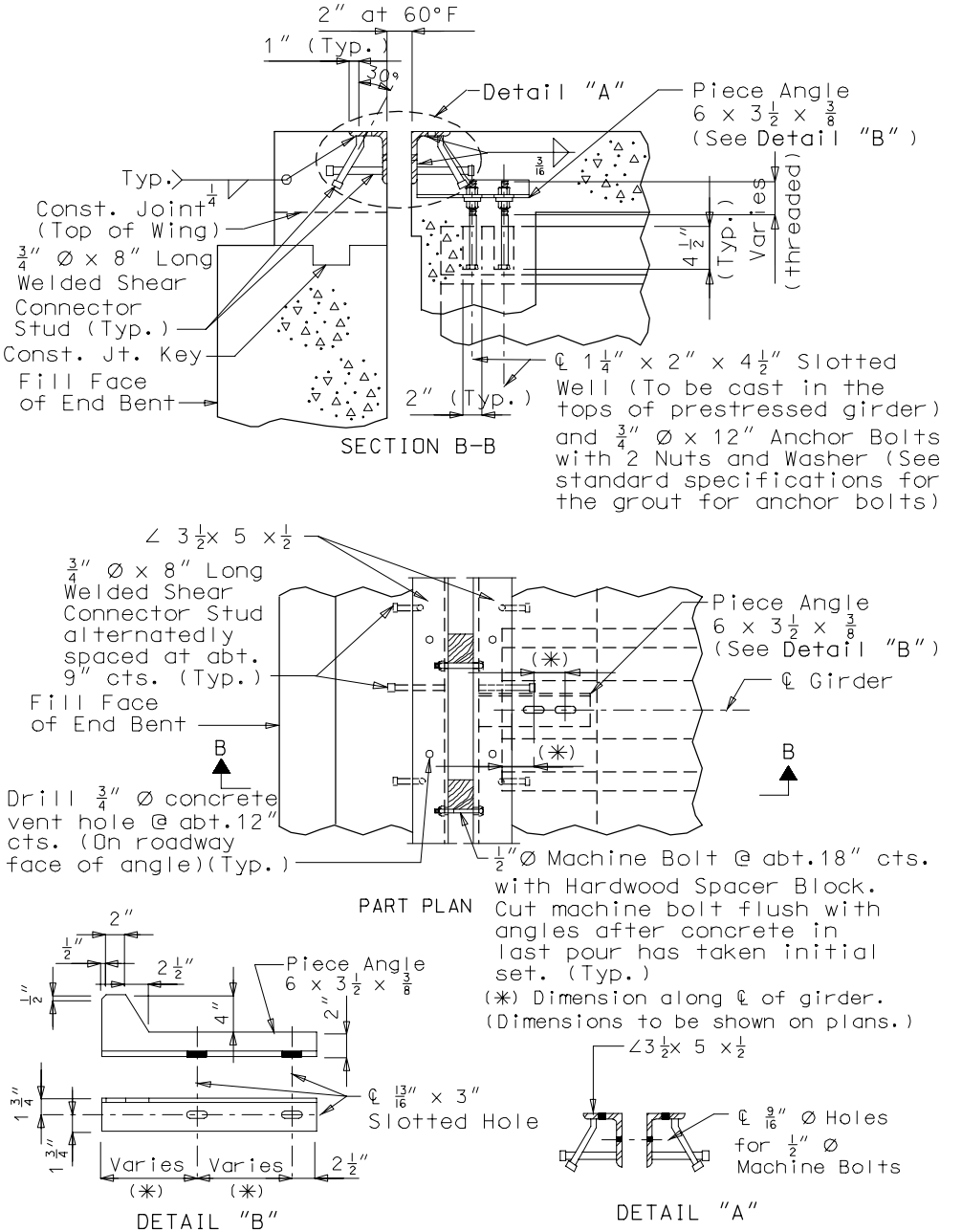

BARRIER CURB DETAILS Silicone Expansion Joint Sealant

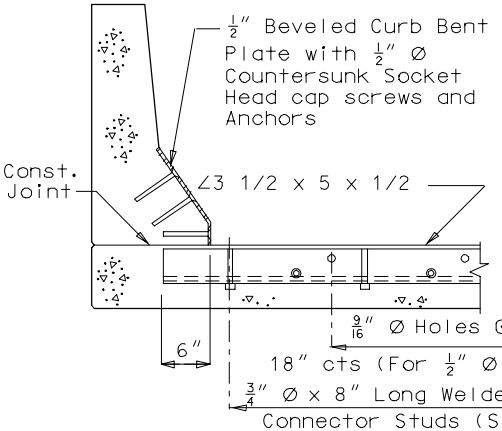

PART SECTION B-B

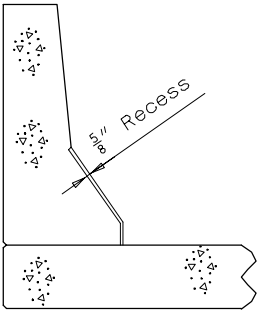

PART SECTION A-A

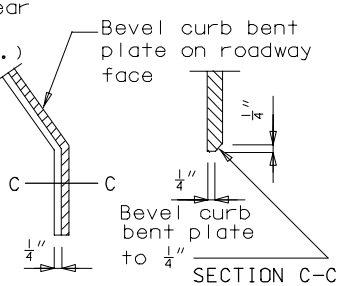

PART ELEVATION AT END OF BEVELED CURB BENT PLATE

SECTION C-C

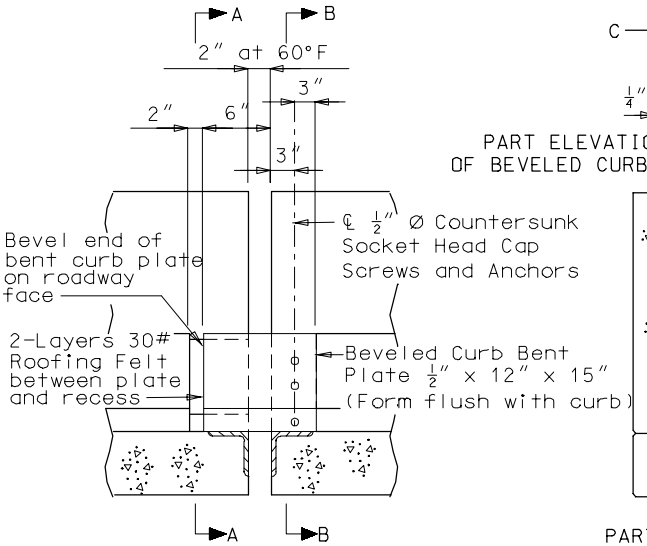

PART ELEVATION OF BARRIER CURB

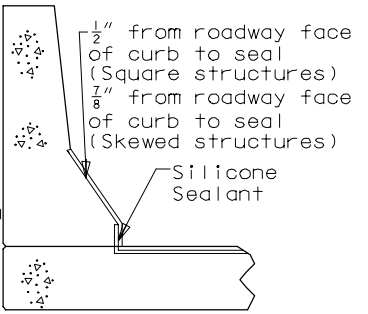

PART SECTION THRU SAFETY BARRIER CURB SHOWING SILICONE EXPANSION JOINT SEALANT

TYPICAL PART PLANS Silicone Expansion Joint Sealant

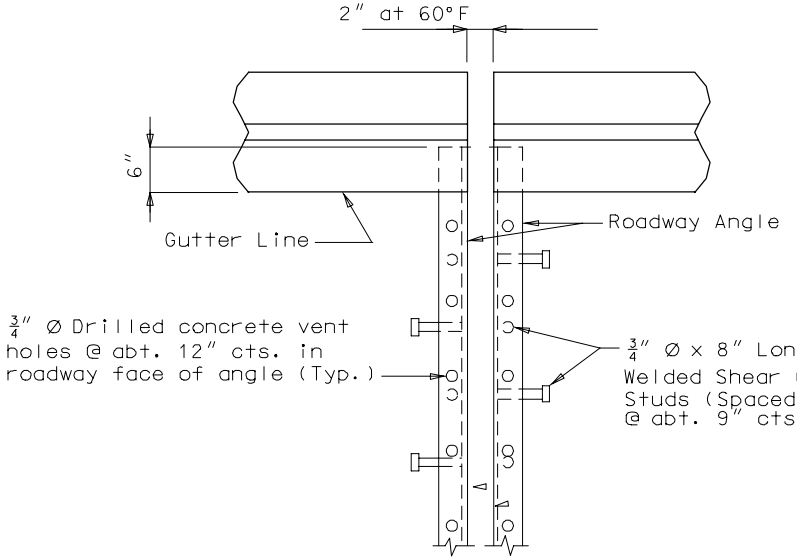

SQUARE STRUCTURE

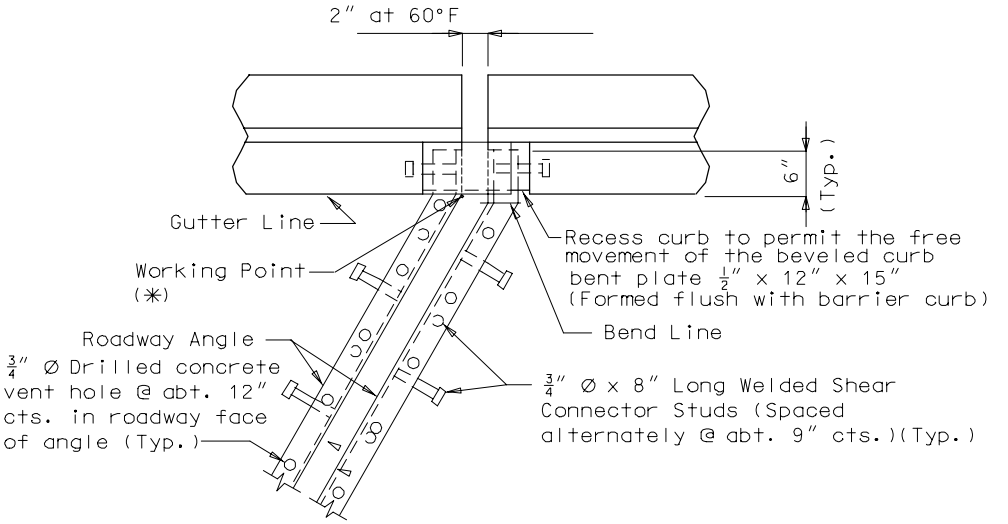

SKEWED STRUCTURE

(✳) The working point is always placed on the front face side of backwall at the gutter line.

SAFETY BARRIER CURB AT END BENTS Silicone Expansion Joint Sealant

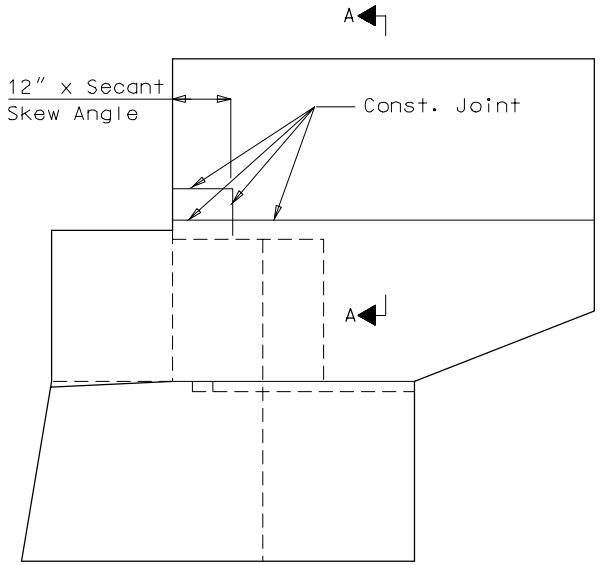

ELEVATION

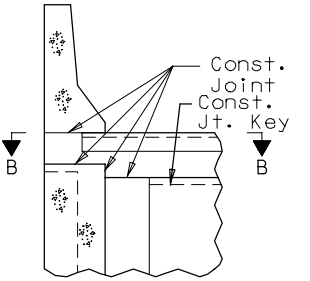

PART SECTION A-A

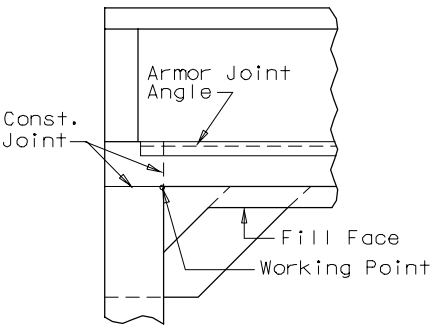

PART PLAN B-B
(SQUARE)

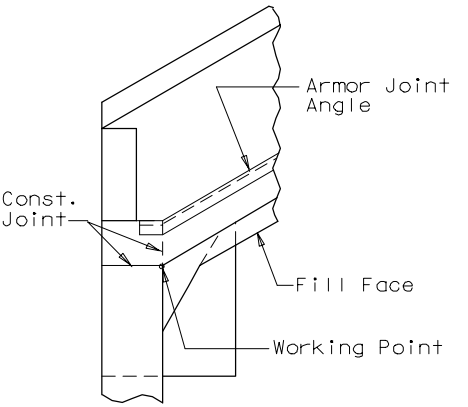

PART PLAN B-B
(SKEWED)

DOUBLE FACED MEDIAN BARRIER BRIDGE CURB Silicone Expansion Joint Sealant

Note:

For details not shown of median barrier bridge curb, see the safety barrier curb details LRFD DG Sec. 3.32, Design Division Standard Drawings (Concrete Median Barrier) and Bridge Design Layout.

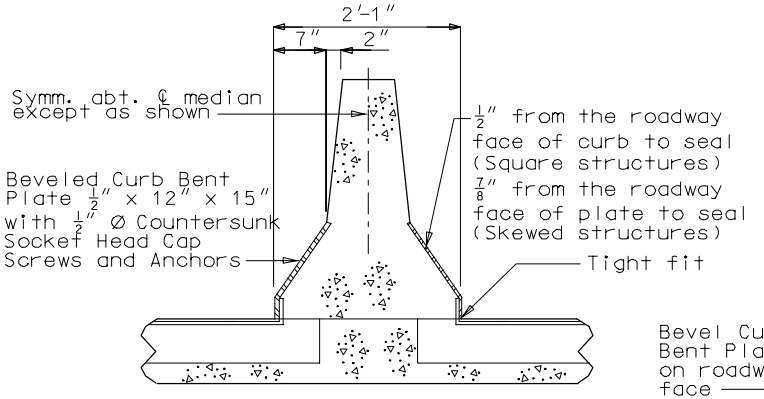

TYPICAL PART SECTION A-A

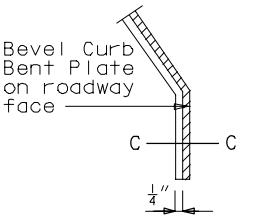

PART ELEVATION AT END OF BEVELED CURB BENT PLATE

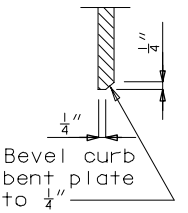

SECTION C-C

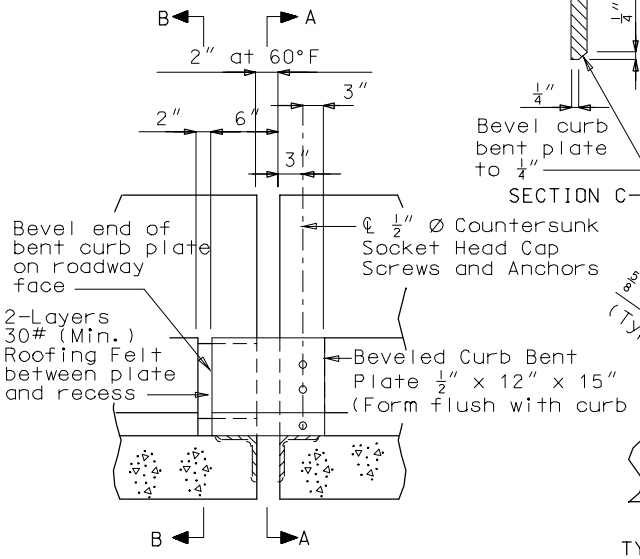

PART ELEVATION OF BARRIER CURB

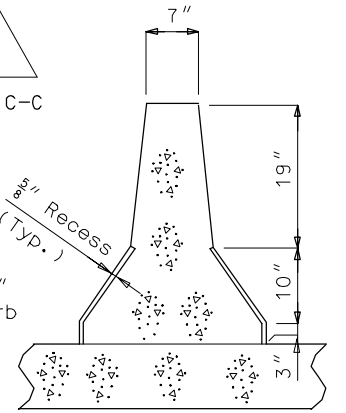

TYPICAL PART SECTION B-B

POLYMER CONCRETE

Silicone Expansion Joint Sealant

Silicone Expansion Joint Sealant may be used on rehabilitation projects where other expansion devices need to be replaced. Consult with Structural Project Manager about the use of polymer concrete with silicone sealant. Silicone sealant is to be designed with the same requirements as a normal silicone expansion joint sealant.

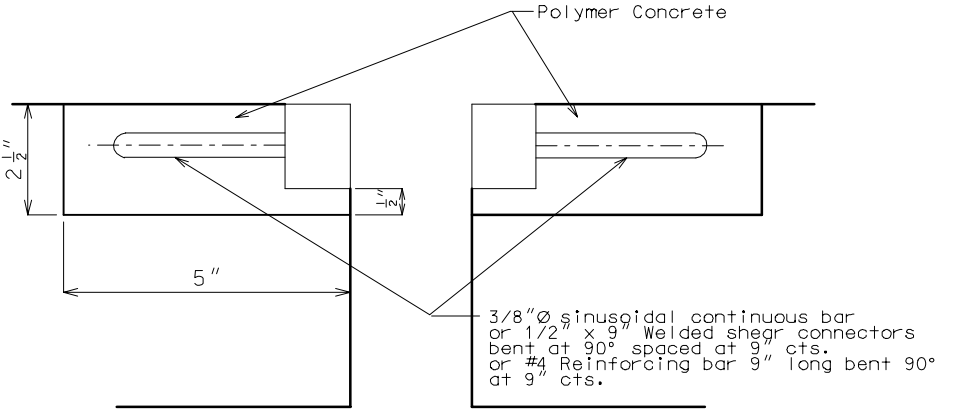

Note: Anchorage system shall be welded to steel armor with appropriate weld to meet AASHTO Fatigue Category C for connection.

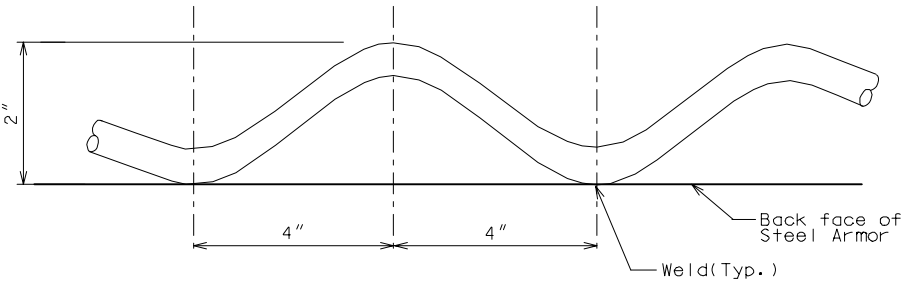

DETAIL OF SINUSOIDAL BAR

Note: A pay item exists for this type of expansion device system. The system will be paid for under Silicone Expansion Joint Sealant System, per linear foot. Polymer concrete will be paid for under Polymer Concrete per cubic foot.

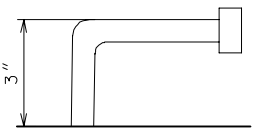

DETAIL OF SHEAR CONNECTOR

(#4 Reinforcing bar shall be bent in a similar manner)

3.35.3 Preformed Compression Joint Seal

3.1 General

Preformed Compression Seal Expansion Joint Systems is an alternate to Silicone Expansion Joint Seglant System. The system can be used for movements up to 2″ with skews ≤ 20°. Future replacement of this system is more difficult than replacement of the Silicone Expansion Joint Sealant System.

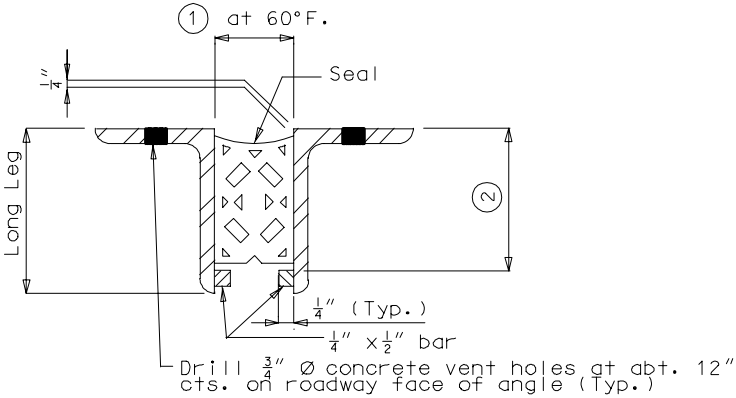

PART CROSS SECTION THRU EXPANSION JOINT

TABLE OF TRANSVERSE BRIDGE SEAL DIMENSIONS					
SEAL WIDTH (Wn)	①	②	REQUIRED MOVEMENT RANGE(M ⊥)	MIN. JOINT WIDTH (⊥TO JOINT)	MAX. JOINT WIDTH (⊥TO JOINT)
2.5″	1 9/16″	MANUFACTURER'S RECOMMENDED HEIGHT	1.00″	1.13″	2.13″
3.0″	1 7/8″	MANUFACTURER'S RECOMMENDED HEIGHT	1.20″	1.34″	2.55″
3.5″	2 3/16″	MANUFACTURER'S RECOMMENDED HEIGHT	1.40″	1.58″	2.98″
4.0″	2 7/16″	MANUFACTURER'S RECOMMENDED HEIGHT	1.65″	1.75″	3.40″
4.5″	2 13/16″	MANUFACTURER'S RECOMMENDED HEIGHT	1.80″	2.03″	3.83″

Size of Armor Angle:
Vertical leg of angle shall be a minimum of ② + 3/4″, horizontal leg of angle shall be a minimum of 3″. Minimum thickness of angle shall be 1/2″.

Check 1″ ≤ w ≤ 4″ after select seal size,
w = gap at top slab in the direction of travel, in inch.

Preformed Compression Seal Extension Joint System

3.2 Steel Structure Details at End Bents

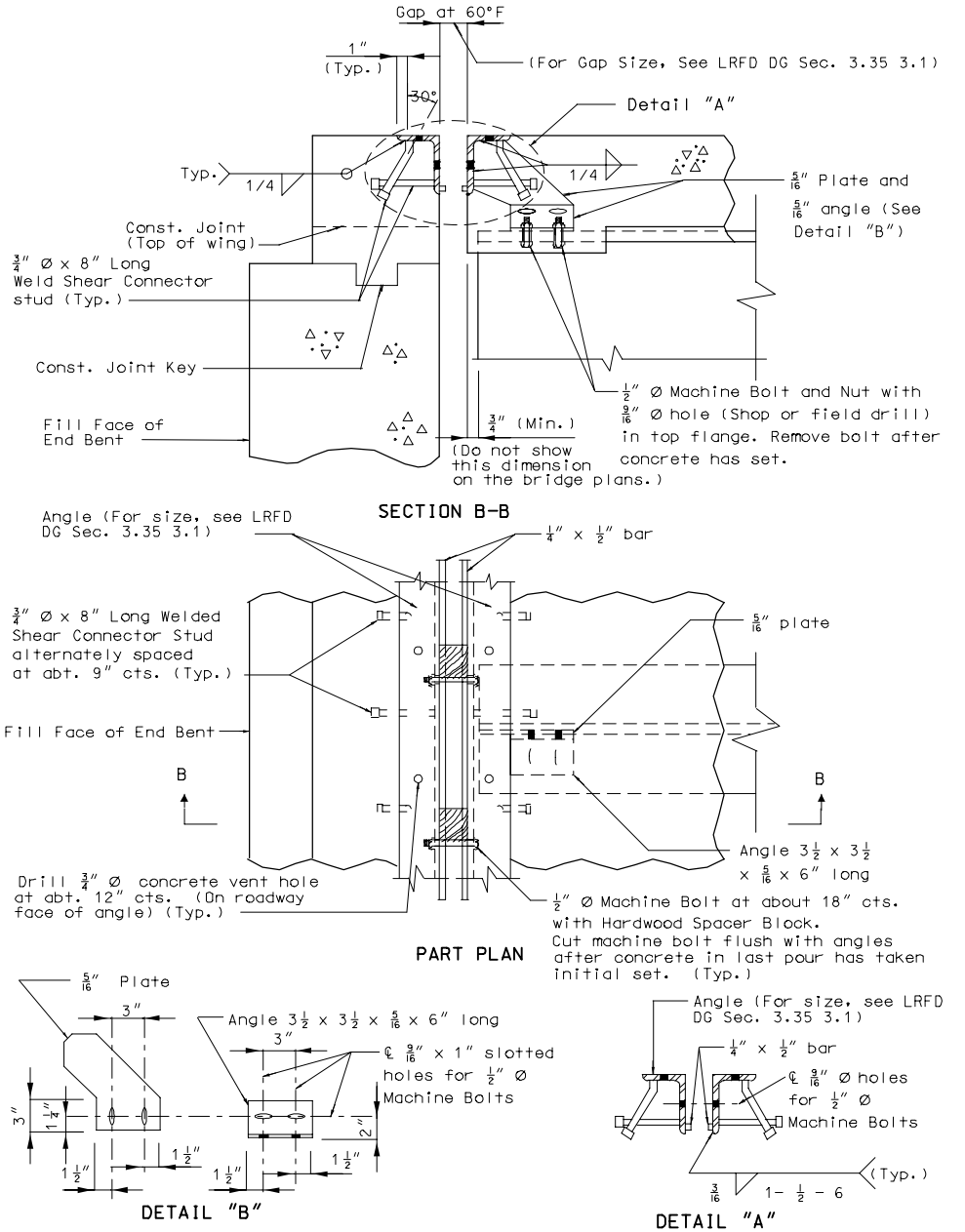

Preformed Compression Seal Expansion Joint System

3.3 Prestressed Structure Details

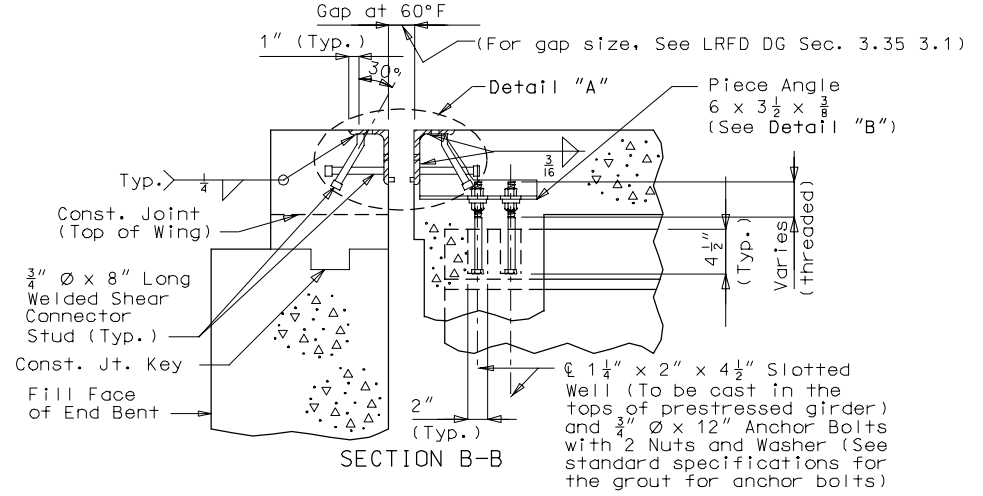

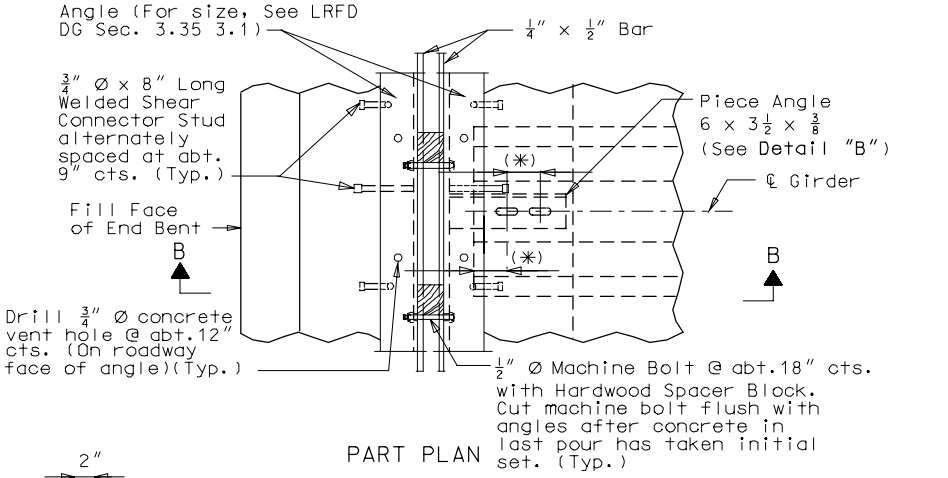

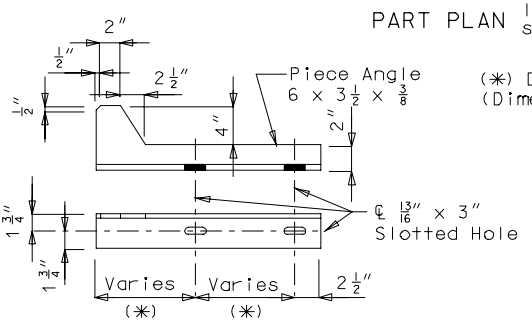

(✳) Dimension along ℄ of girder.
(Dimensions to be shown on plans.)

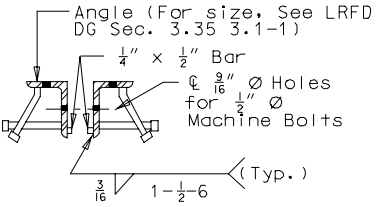

3.4 Barrier Curb Details

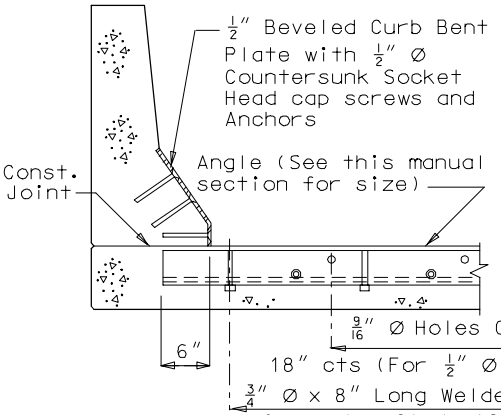

PART SECTION B-B

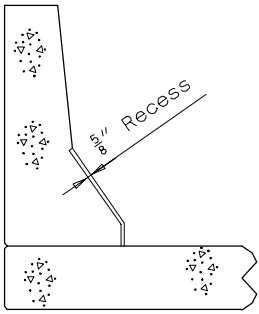

PART SECTION A-A

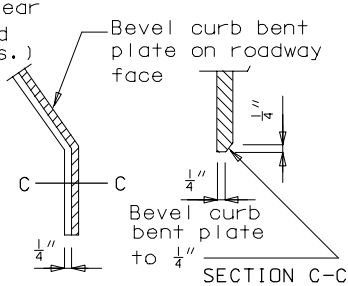

PART ELEVATION AT END OF BEVELED CURB BENT PLATE

SECTION C-C

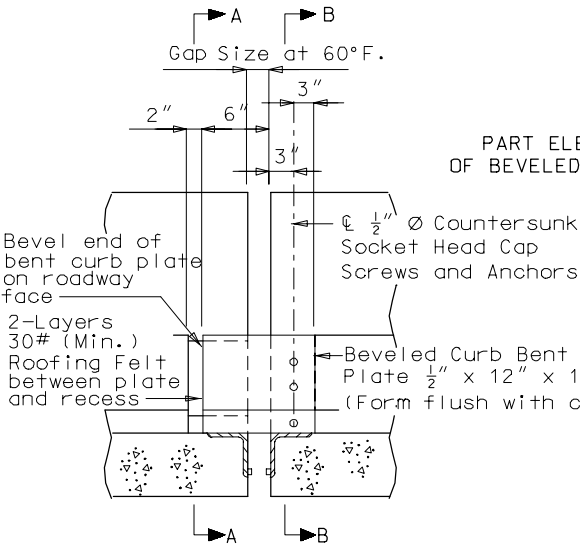

PART ELEVATION OF BARRIER CURB

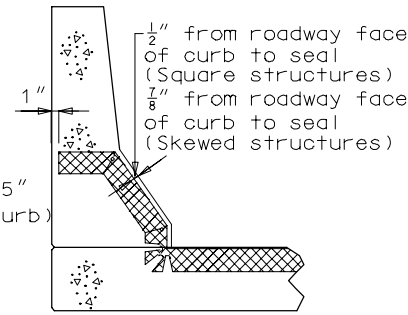

PART SECTION THRU SAFETY BARRIER CURB SHOWING PREFORMED COMPRESSION SEAL

Barrier Curb Details (Cont.)

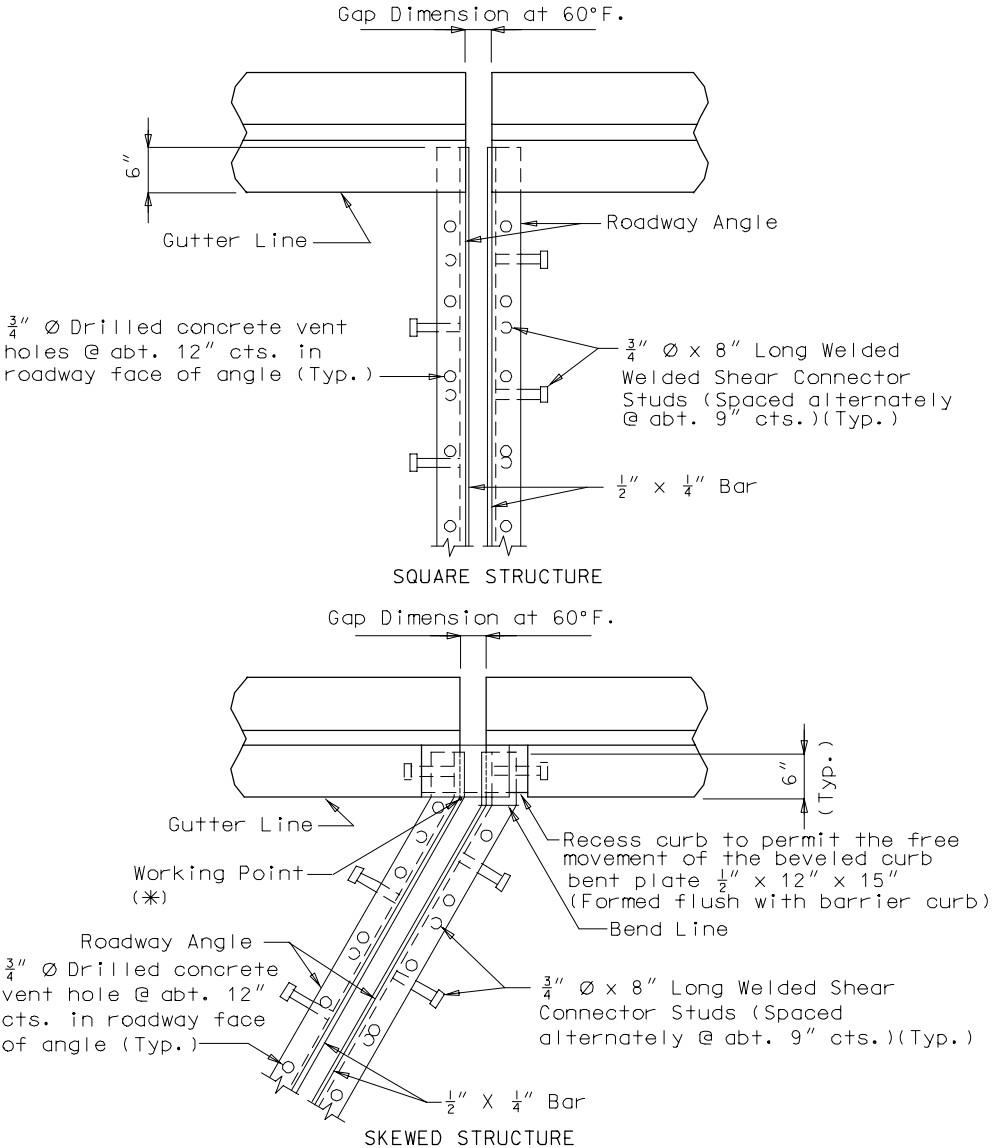

(✳) The working point is always placed on the front face side of backwall at the gutter line.

3.5 Sidewalk Details

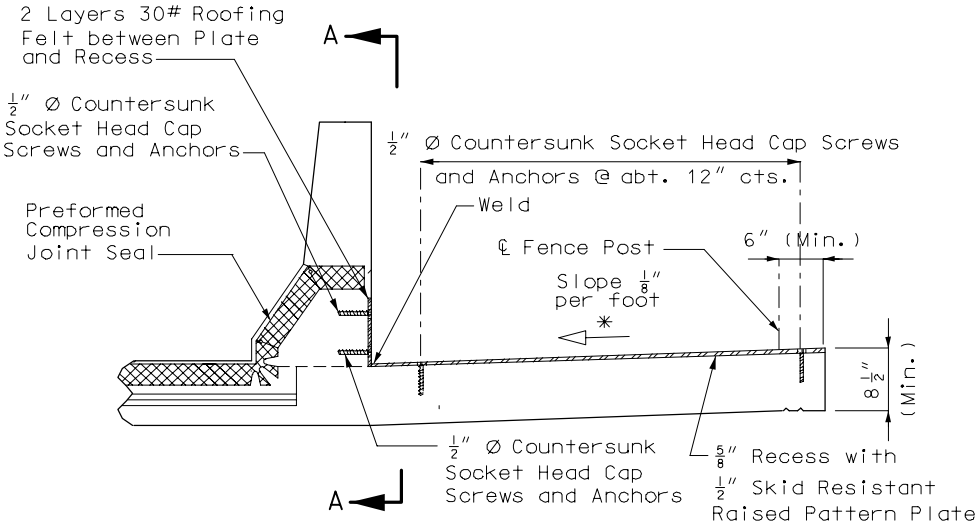

PART SECTION THRU CENTER OF EXPANSION DEVICE

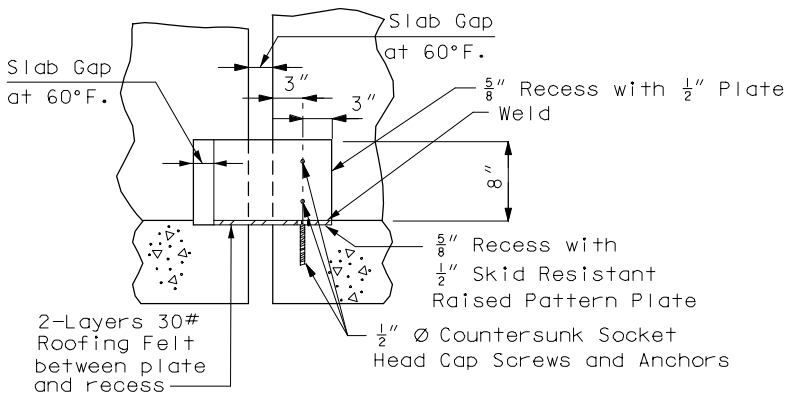

PART SECTION A-A

✳ See Project Manager for direction of slope.

3.6 Double Faced Median Barrier Bridge Curb

For details not shown of median barrier bridge curb, see Sec. 3.32

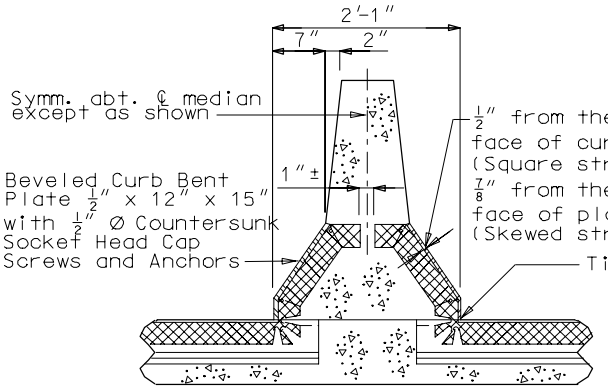

TYPICAL PART SECTION A-A

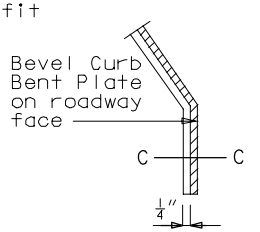

PART ELEVATION AT END OF BEVELED CURB BENT PLATE

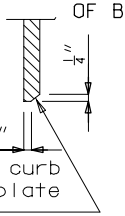

SECTION C-C

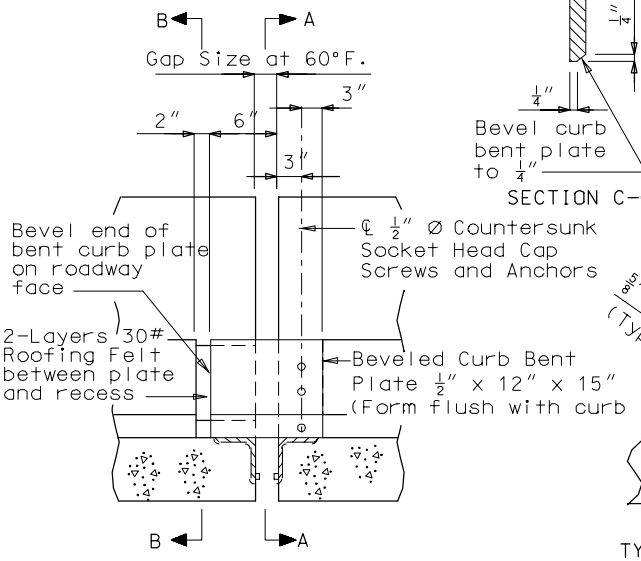

PART ELEVATION OF BARRIER CURB

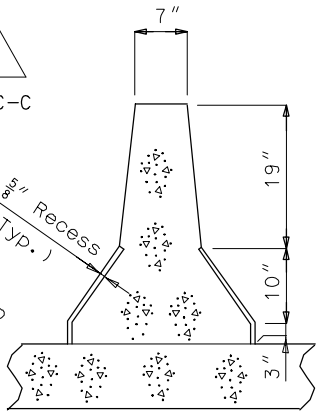

TYPICAL PART SECTION B-B

3.35.4 Strip Seal Expansion Joint System

4.1 General

Strip Seal Expansion Joint Systems should be used for movements greater than 2” and less than 4” for skews ≤ 45°. Use flat plate expansion devices on curved structures and skews over 45°.

The installation width, gap = 2” is based on a design installation temperature of 60°F.

On skew bridges, the strip seal expansion devices must be checked for parallel and perpendicular movements. Parallel movements (Racking) shall be less than 1 ½” for either rise or fall movements. Maximum skew shall be 45°.

Formulas: $M = (\Delta T)(\alpha)(L)$: Bridge total movement or individual rise and fall movements
ΔT = Corresponding temperature range
L = Expansion length
α = Coefficient of linear expansion
$M_{\perp} = M \cos\theta$: Movement perpendicular to joint
$M_{\parallel} = M \sin\theta$: Movement parallel to joint
θ = skew angle

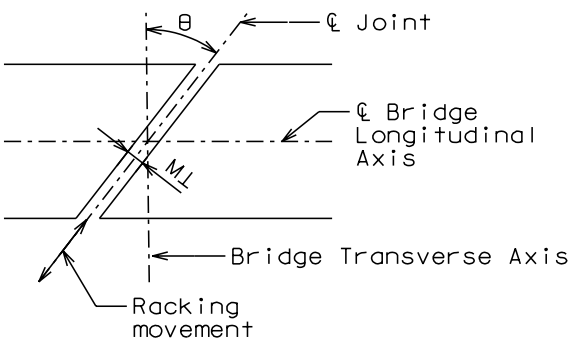

Figure 3.35.4.1.1

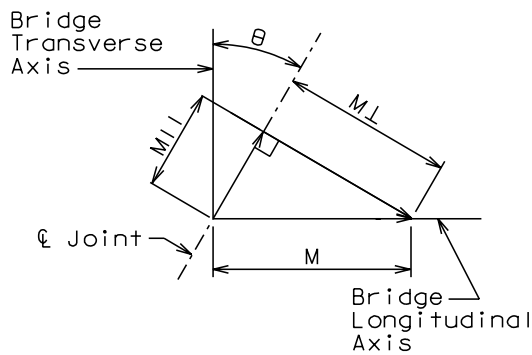

Figure 3.35.4.1.2

Table 3.35.4.1.1 Gland Size

Strip Seal Gland Size	Gap at top Slab (60°F)	Min. Joint Width (⊥ to Joint)	Max. Joint Width (⊥ to Joint)	Max. Gap (II ℄ rdwy)
3”	2”	1”	3”	4”
4”	2”	1”	4”	4”

Table 3.35.4.1.2 Max. Expansion Lengths

	Max. Expansion Length (Skew = 0°)	
	3” Gland	4” Gland
Concrete Bridge	198’	396’
Steel Bridge	160’	280’

4.2 Gland and Steel Armor Details

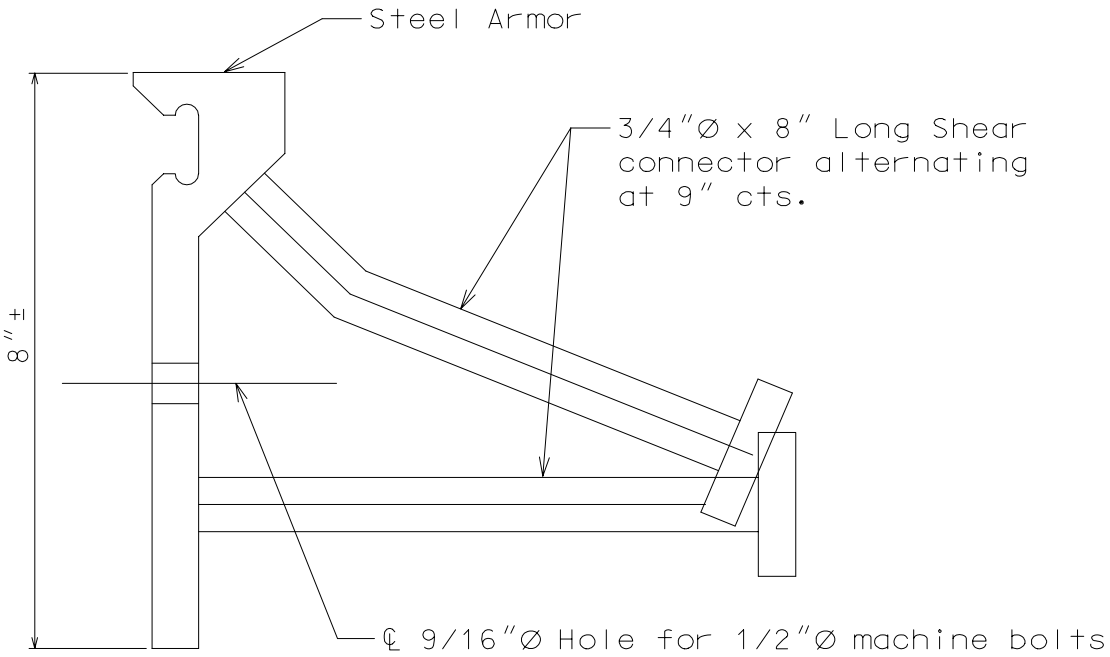

Figure 3.35.4.2.1 Detail of Joint Armor

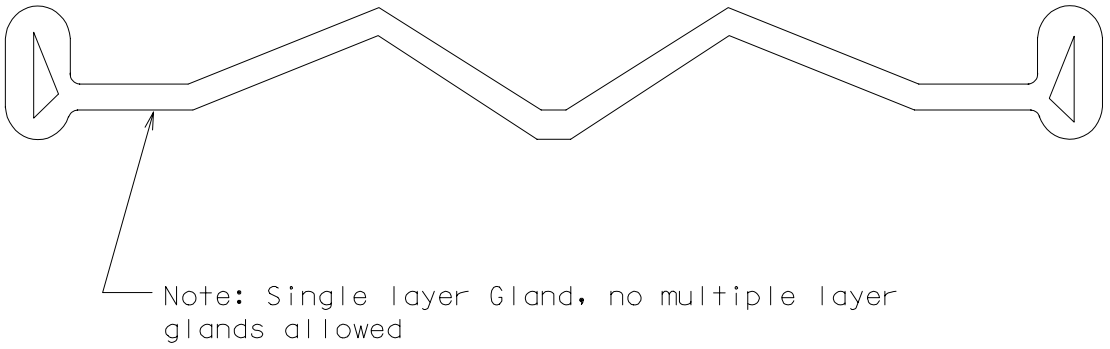

Figure 3.35.4.2.2 Detail of Gland

4.3 Joint System Details (Steel Structures) at End Bent

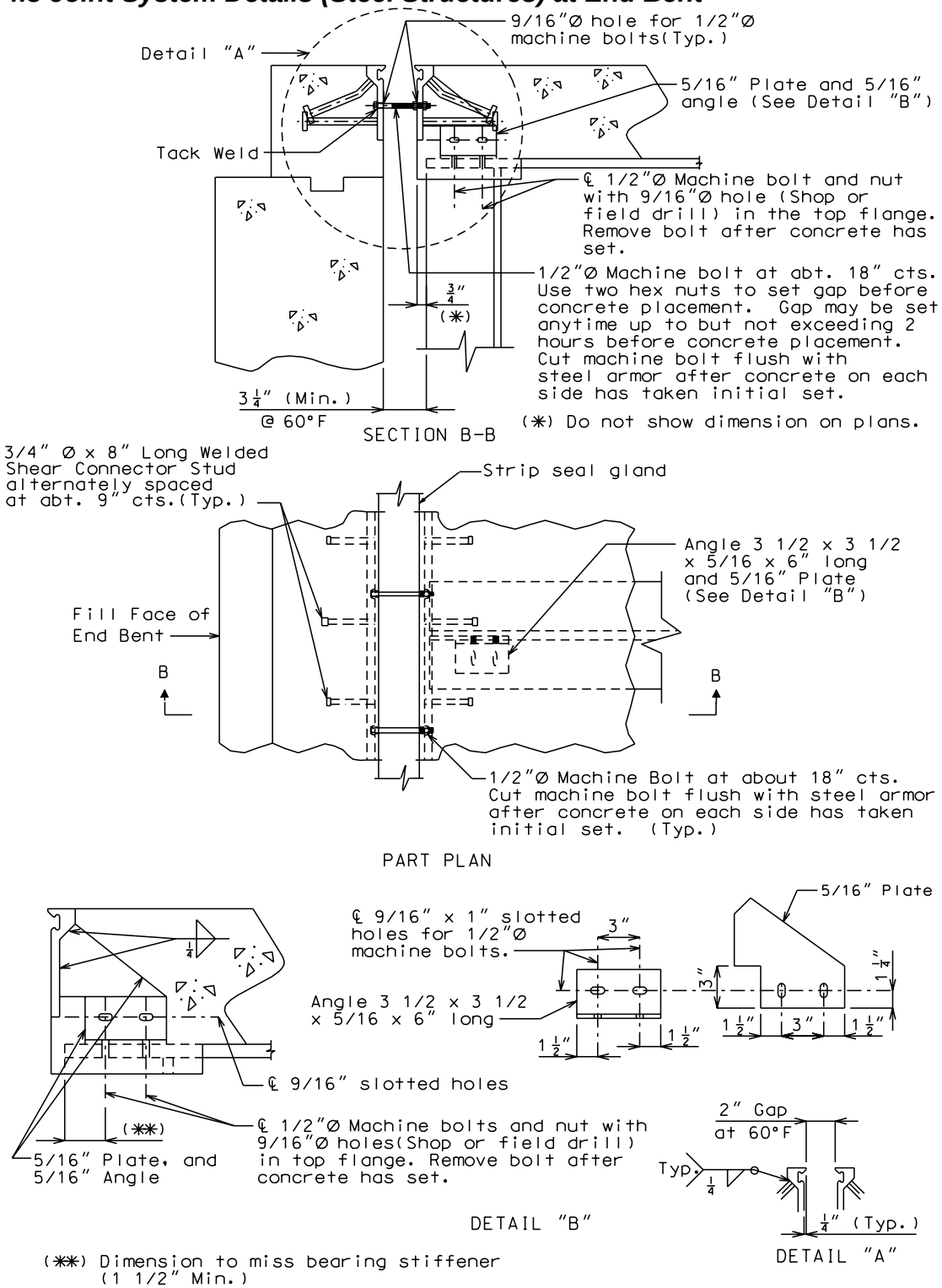

Joint System Details (Steel Structures) at Intermediate Bents

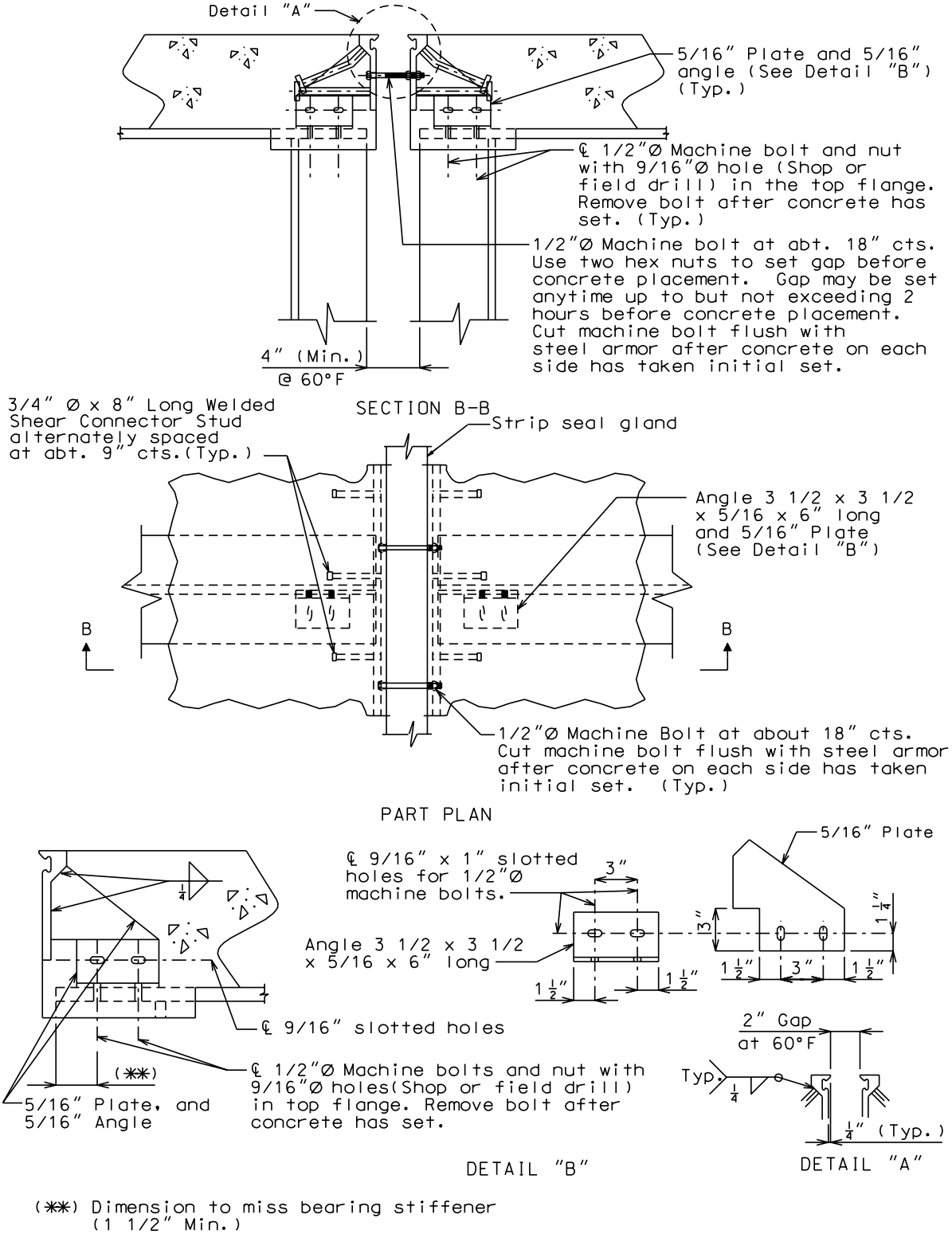

4.4 Joint System Details (Prestressed Structures) at End Bents

(✱✱✱) 1/2″ Ø Machine Bolt @ abt.18″ cts. Use two hex nuts to set gap before concrete placement. Gap may be set anytime up to but not exceeding 2 hours before concrete placement. Cut machine bolt flush with steel armor after concrete on each side has taken initial set.

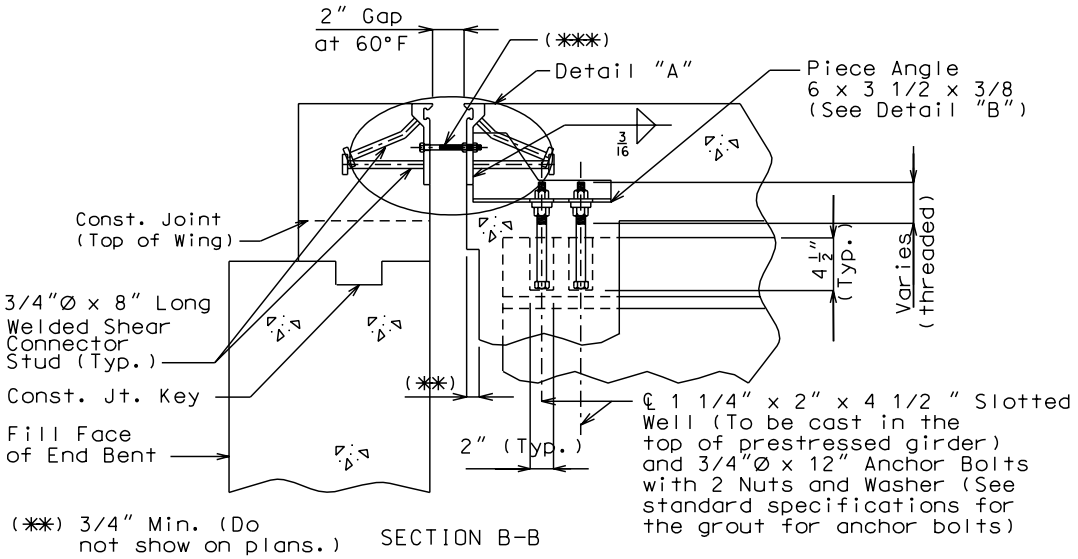

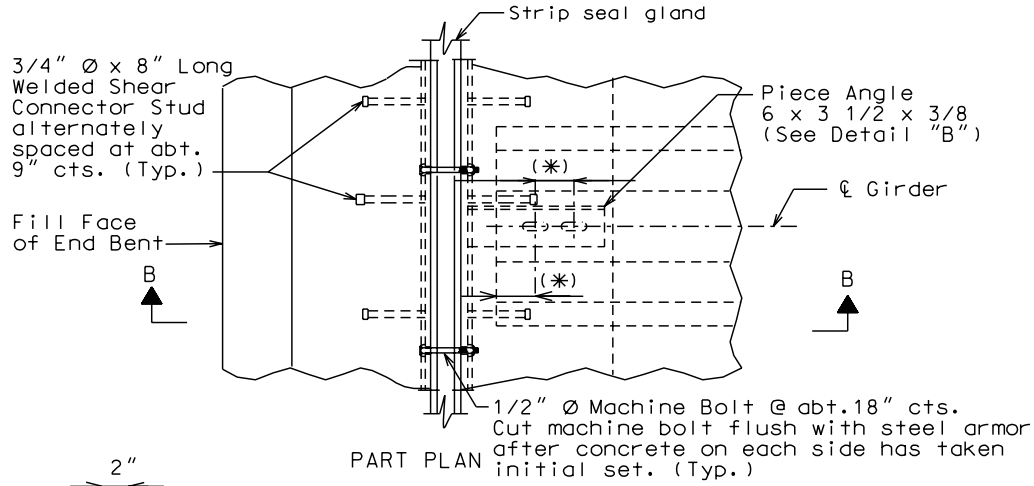

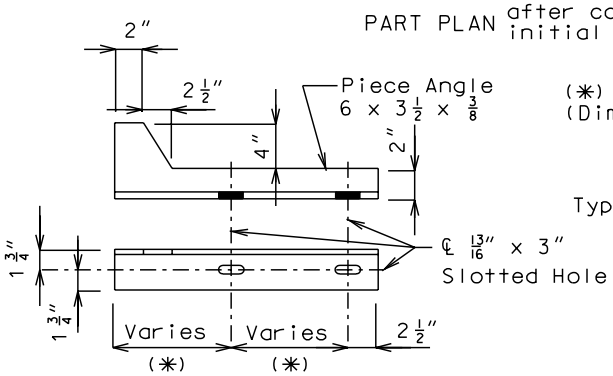

(✱) Dimension along ℄ of girder.
(Dimensions to be shown on plans.)

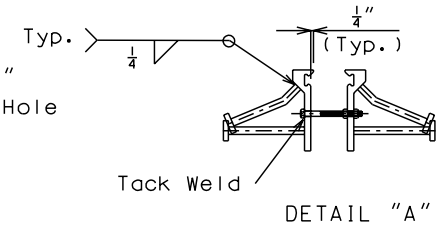

Joint System Details (Prestressed Structures) at End Bents (Cont.)

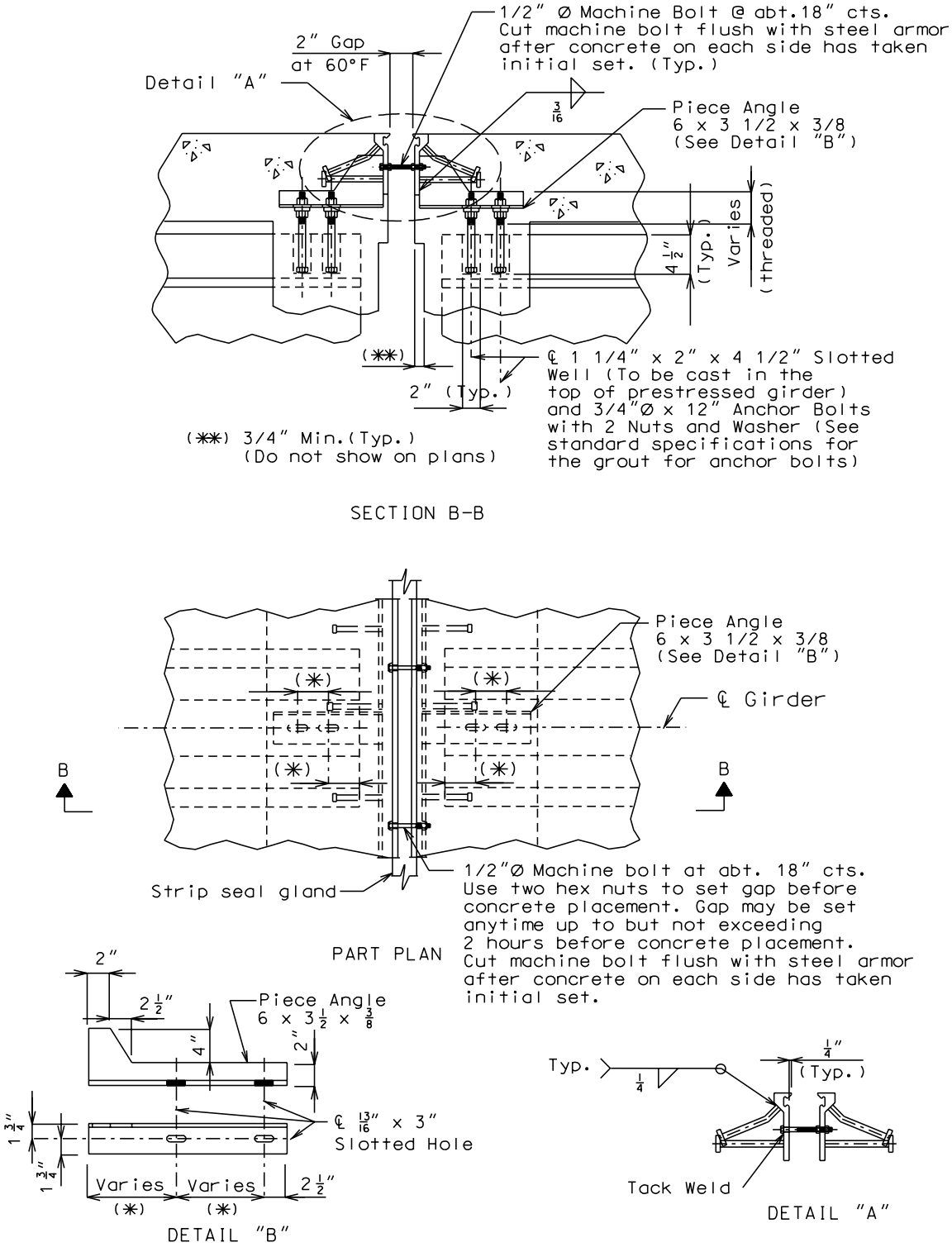

(✱) Dimension along ℄ of Girder (Dimension to be shown on plans).

4.5 Barrier Curb Details

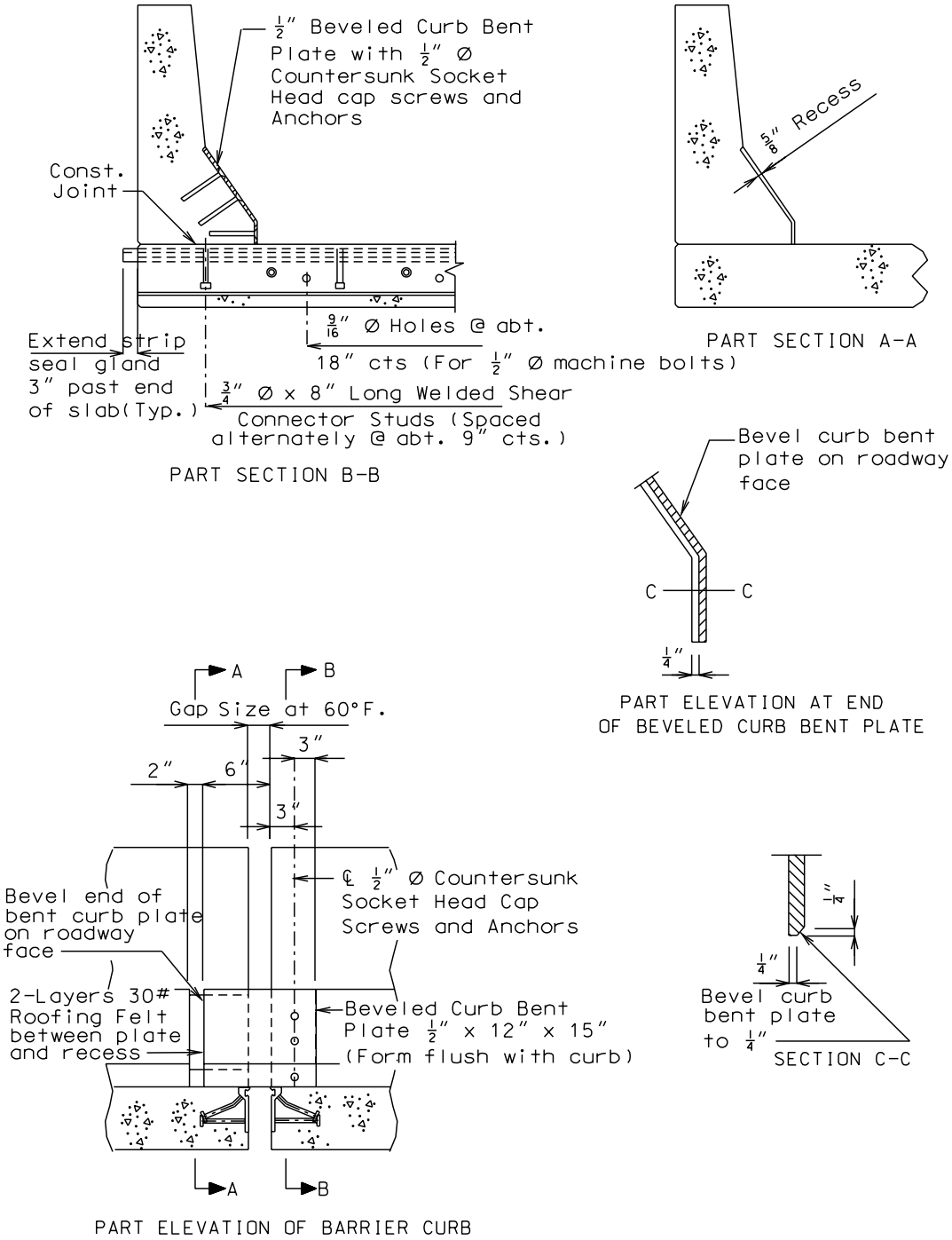

Barrier Curb Details (Cont.)

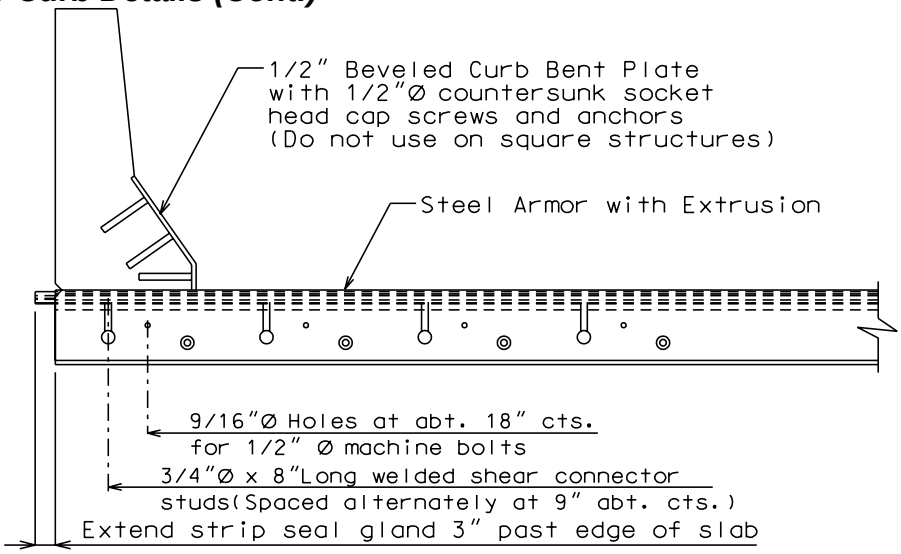

SECTION THRU JOINT

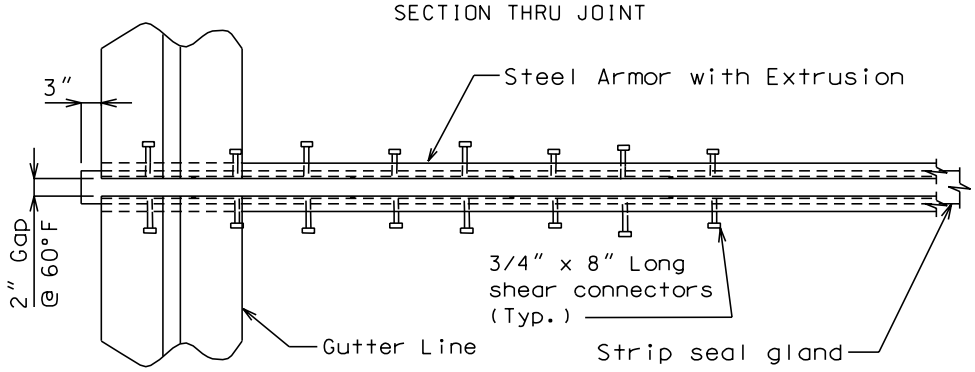

PART PLAN (SQUARE BRIDGE)

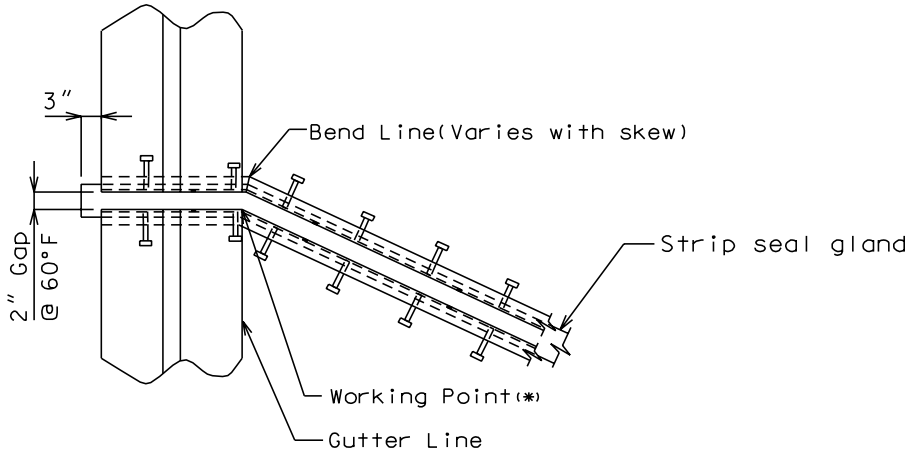

(*) Working Point is always at Front Face of Backwall at gutterline.

PART PLAN (SKEWED BRIDGE)

Barrier Curb Details at End Bents

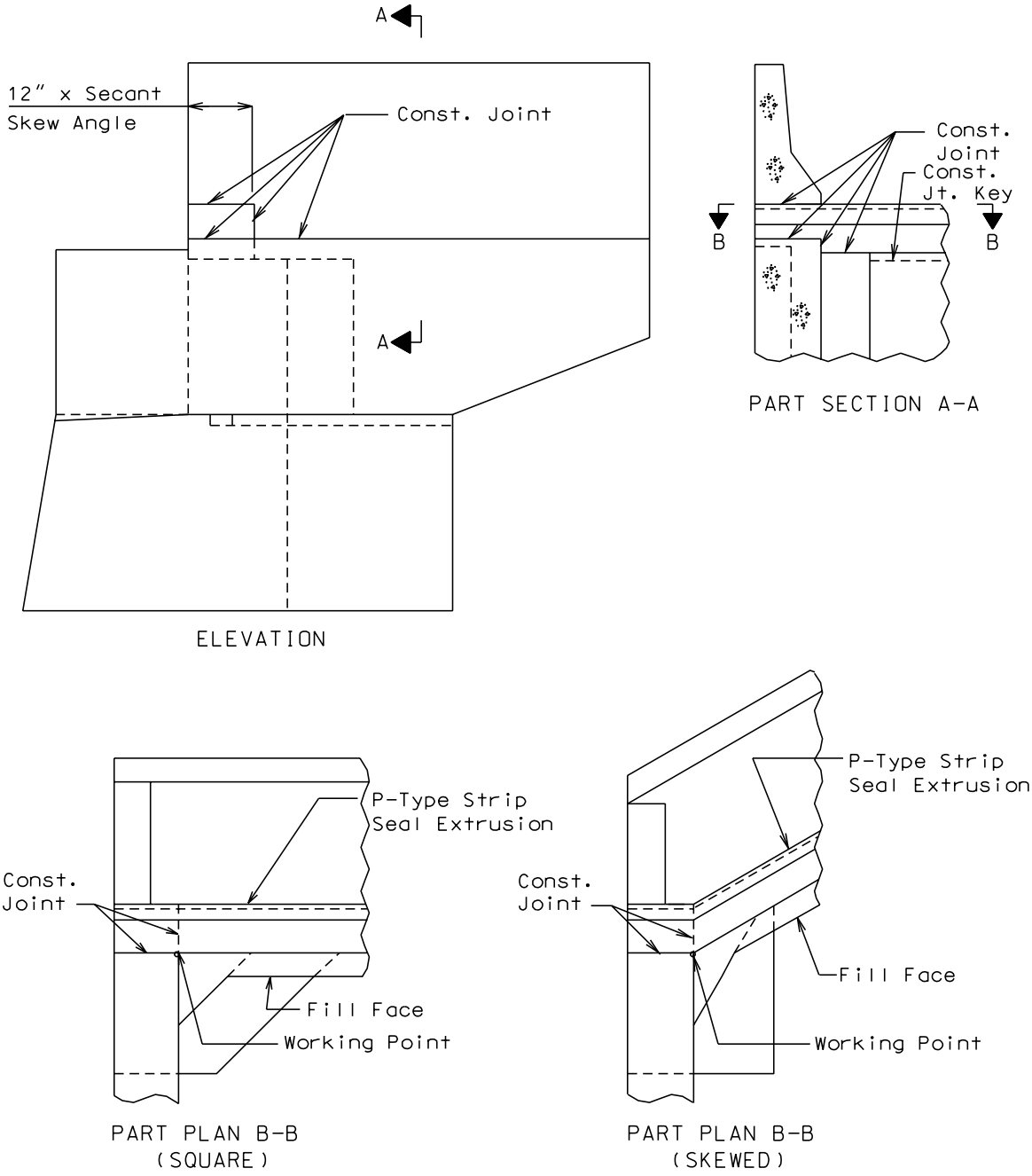

4.6 Double Faced Median Barrier Curb Details

Note:
Do not use barrier curb plate on square structures.

For details not shown of median barrier bridge curb, see the safety barrier curb details LRFD DG Sec. 3.32 , Design Division Standard Plans (Concrete Median Barrier) and Bridge Design Layout.

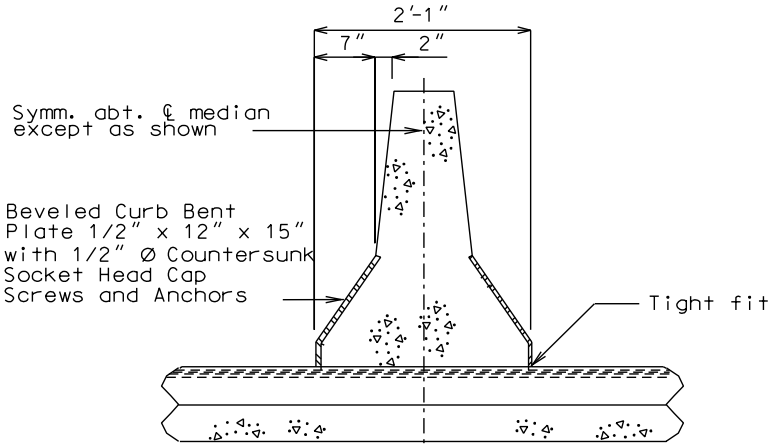

TYPICAL PART SECTION A-A

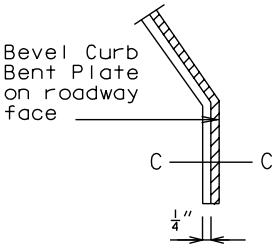

PART ELEVATION AT END OF BEVELED CURB BENT PLATE

Note: Use continuous strip seal thru median curb only when slab cross-slope slopes away from curb or slab is superelevated.

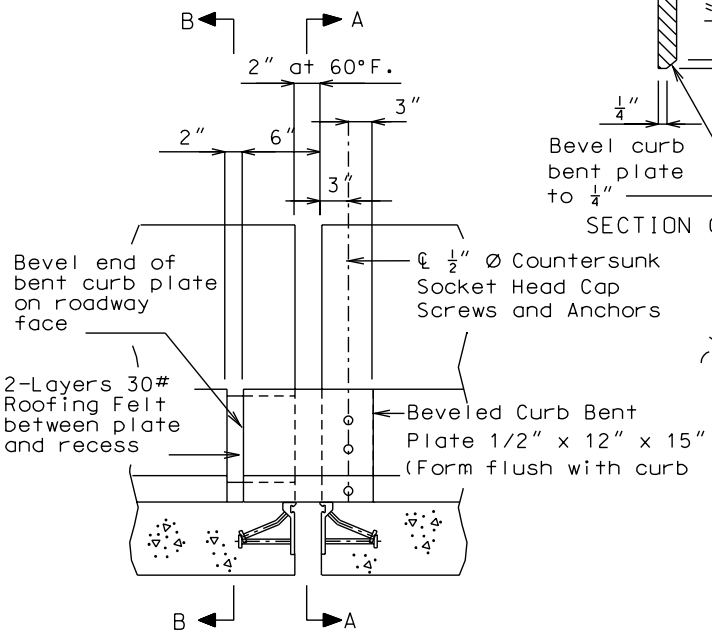

PART ELEVATION OF BARRIER CURB

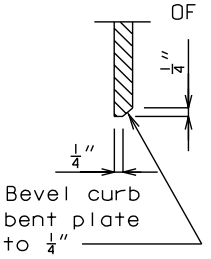

SECTION C-C

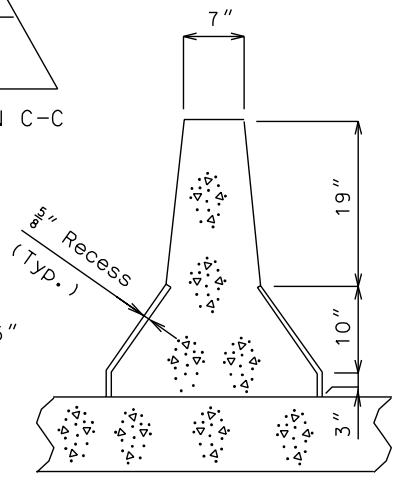

TYPICAL PART SECTION B-B

4.7 Sidewalk Details

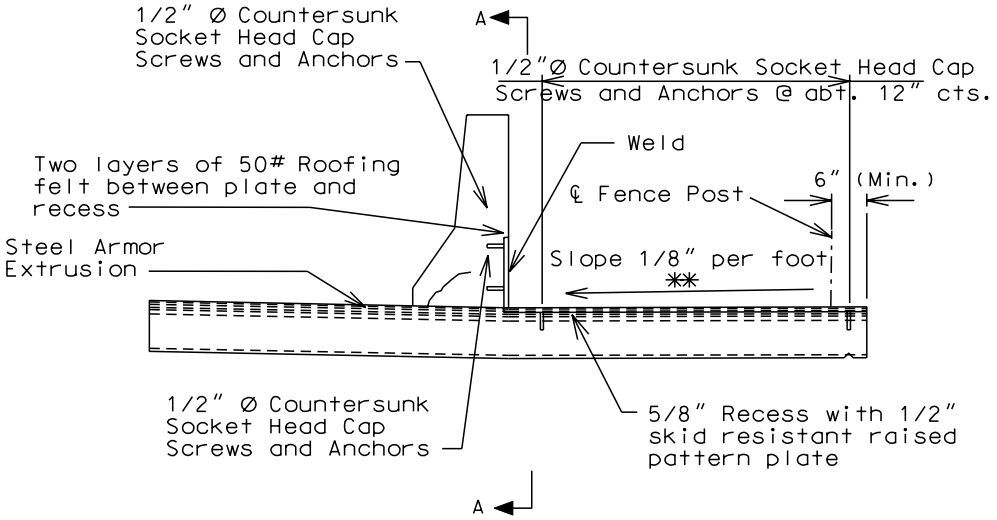

PART SECTION THRU CENTER OF EXPANSION DEVICE

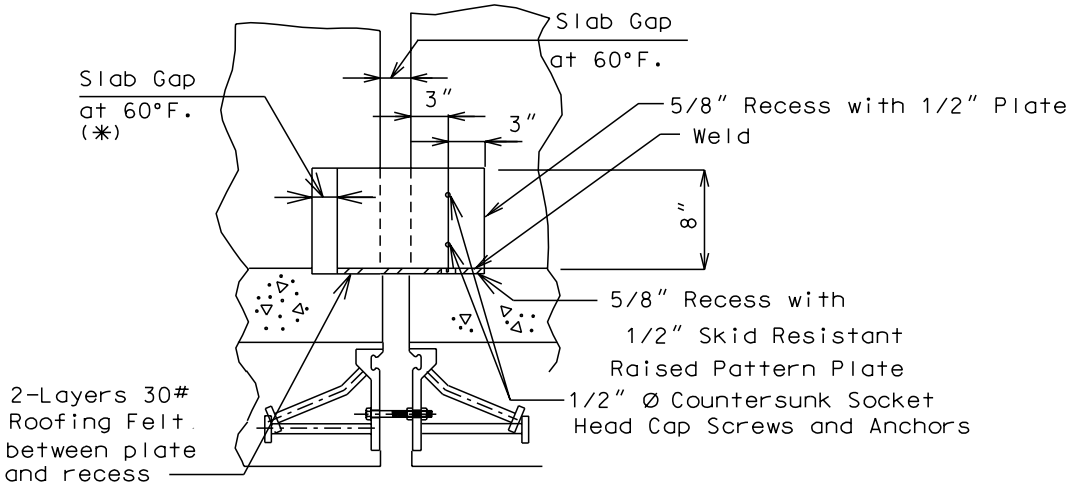

PART SECTION A-A

(*) Max. Walkway Surface Gap = 4".

(**) See Project Manager for direction of slope.

4.8 Drainage Details

In order for strip seal expansion joint systems to function properly the gland must be allowed to drain to prevent build-up of debris. Debris may punch holes in the gland and weight may possibly pull the gland from the extrusions.

To prevent debris buildup on the strip seals the gland should not be turned up at the barrier curb. Instead the steel armor with extrusions should run to the face of the slab through the barrier curb.

Drainage should be handled by one of two methods. The first method is to let the water run off the gland and free fall to the ground below. The gland should extend past the face of the barrier curb by a minimum of 3 inches. At intermediate bents, the bent cap should have a protective coating applied to prevent moisture saturation of the concrete. On structures where there is an adjacent structure separated by a median barrier curb with an open joint (Type D or Split median) the gland should be terminated at some point in the curb at all bent types and protective coating should be applied at all faces exposed to moisture.

The second method of drainage is to provide a fiberglass pipe drainage system to collect water at the bents.

See the Structural Project Manager for the method of drainage to be used.

The following pages provide some possible details that may be used for strip seal expansion joint drainage systems.

If the fiberglass pipe drainage system is used, payment will be made under the pay item. Drainage System (On structure), Lump Sum.

Option #1 - No Drainage System, End Bents

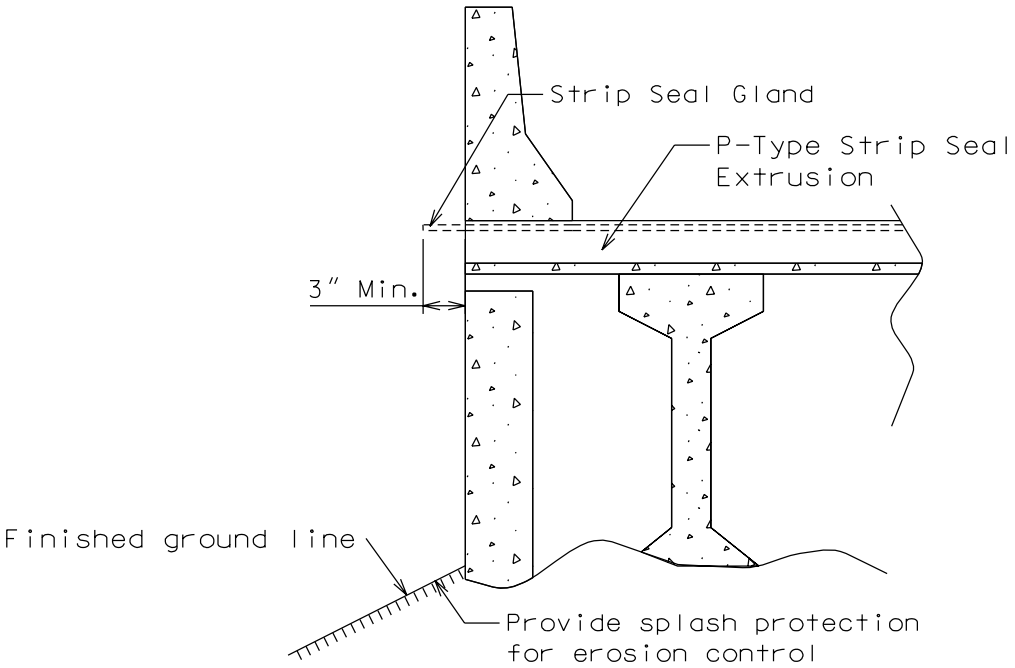

Option #1 – No Drainage System, Split Median Barrier Curb

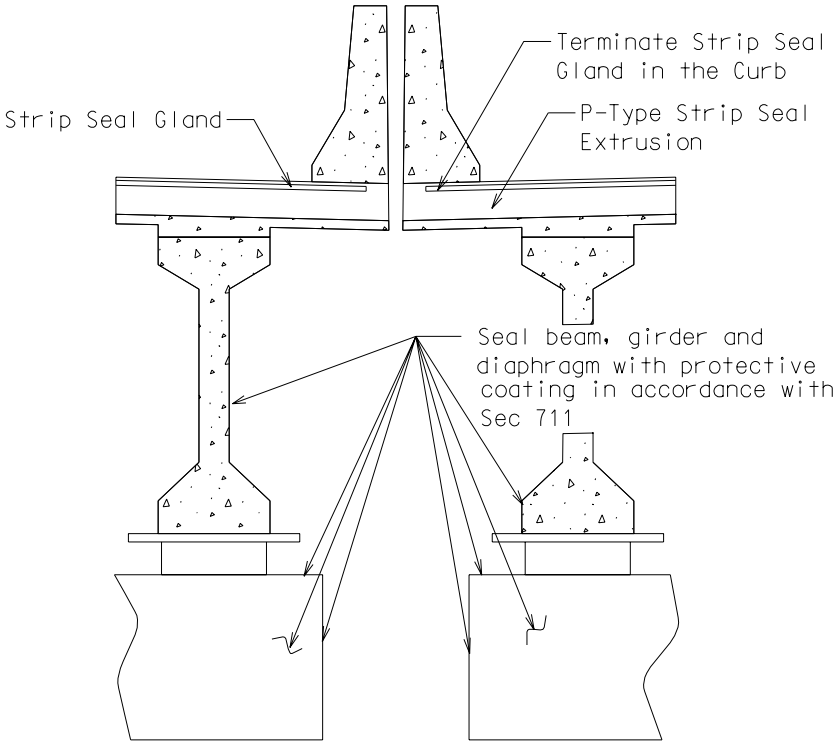

Option #2 – One Piece Drain System, End Bent

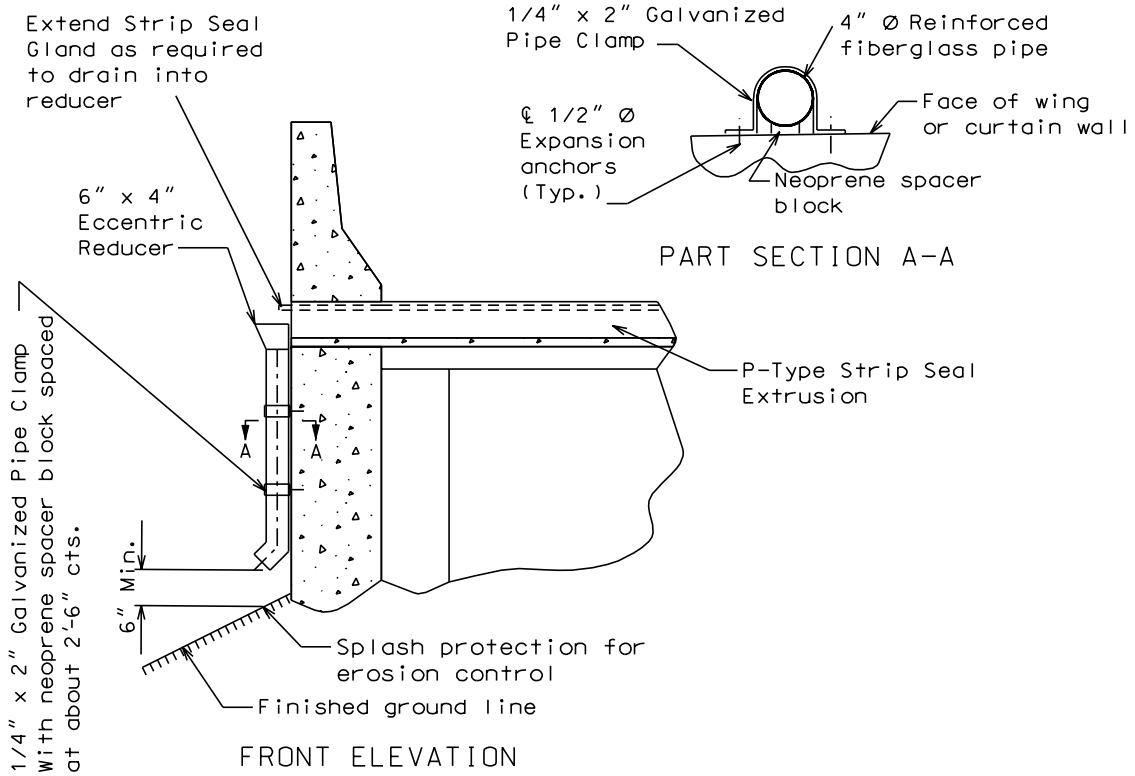

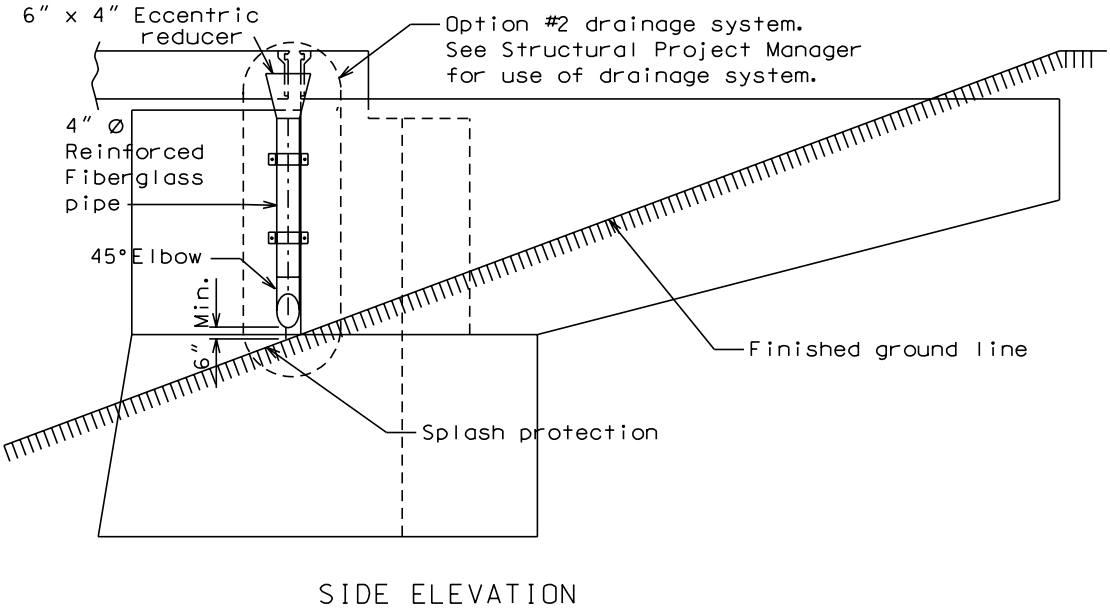

Option #2 – One Piece Drain System, Split Median Barrier Curb at End Bent

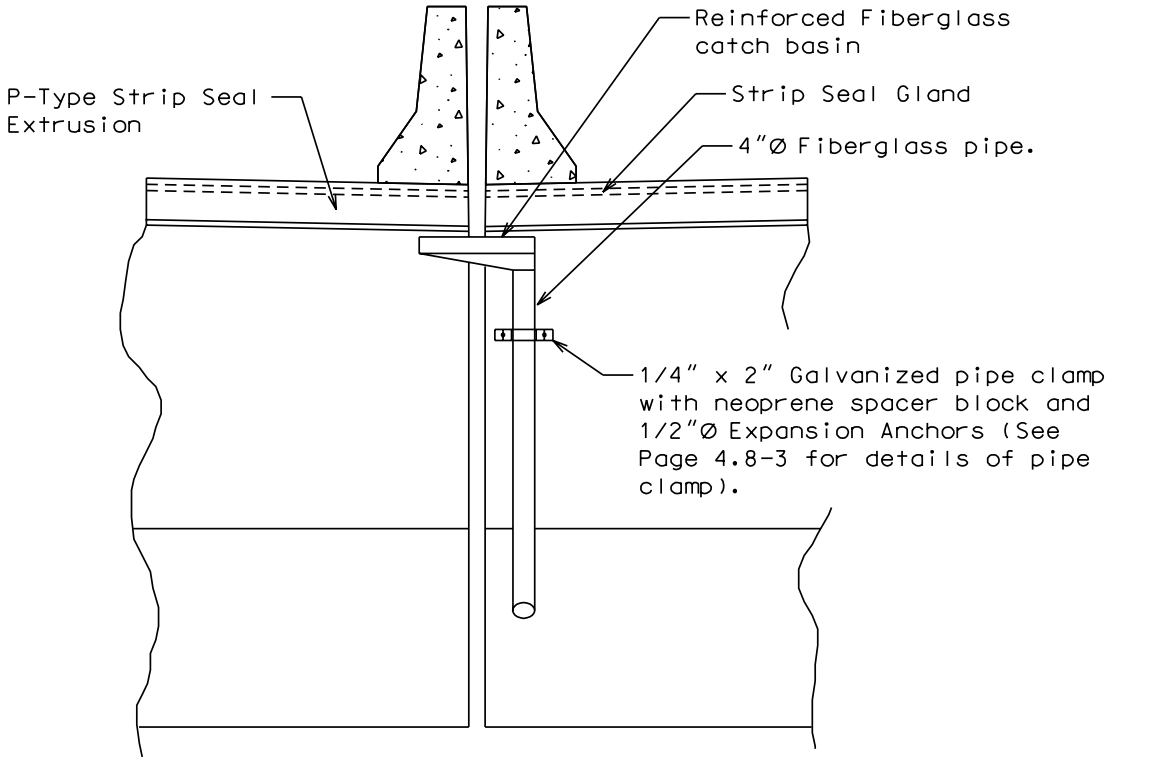

FRONT ELEVATION

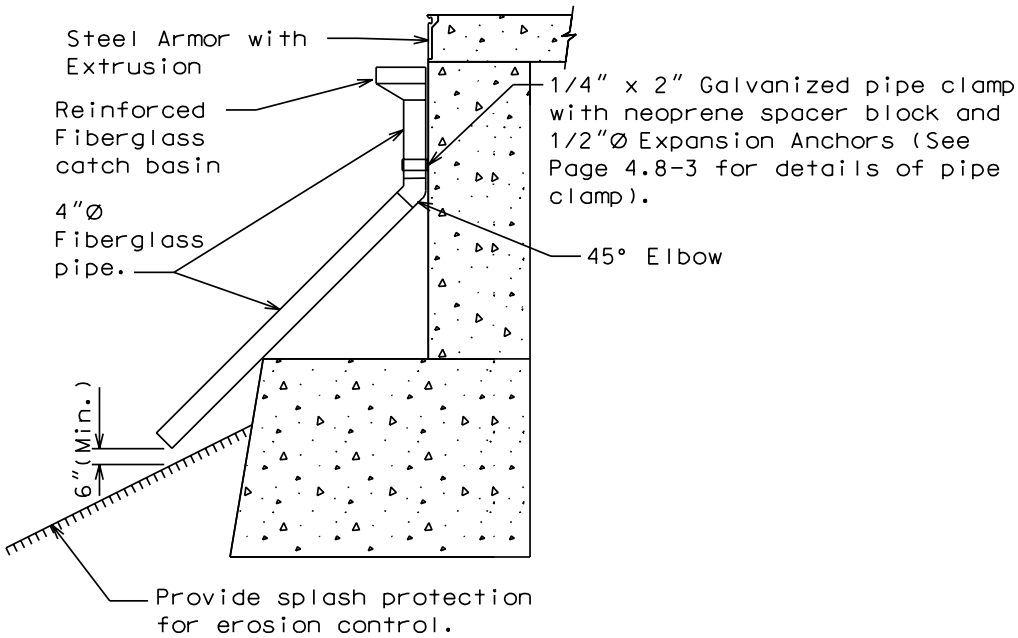

SECTION THRU BENT

Option #2 – One Piece Drain System, Intermediate Bent

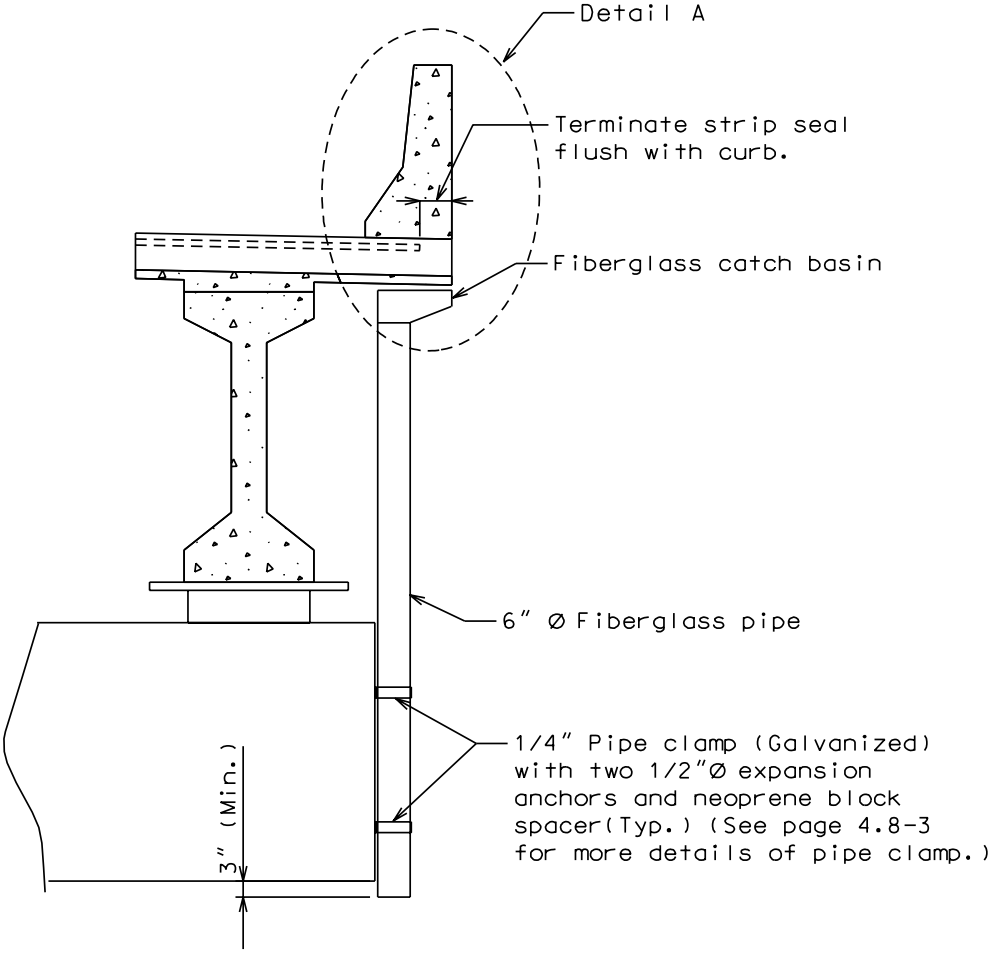

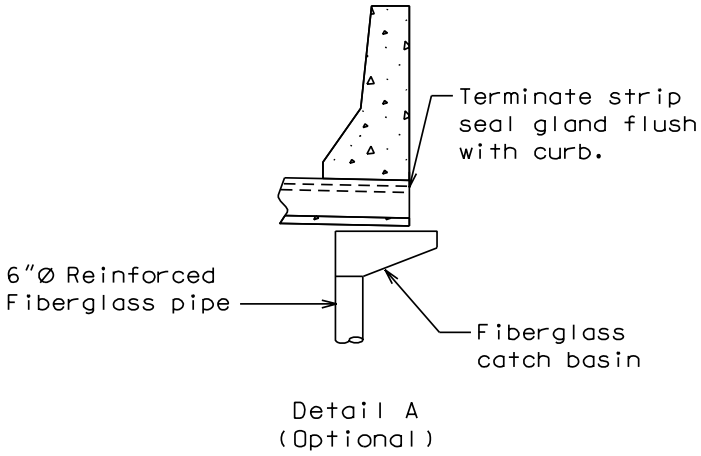

Option #2 – One Piece Drain System, Split Median Barrier Curb at Intermediate Bent

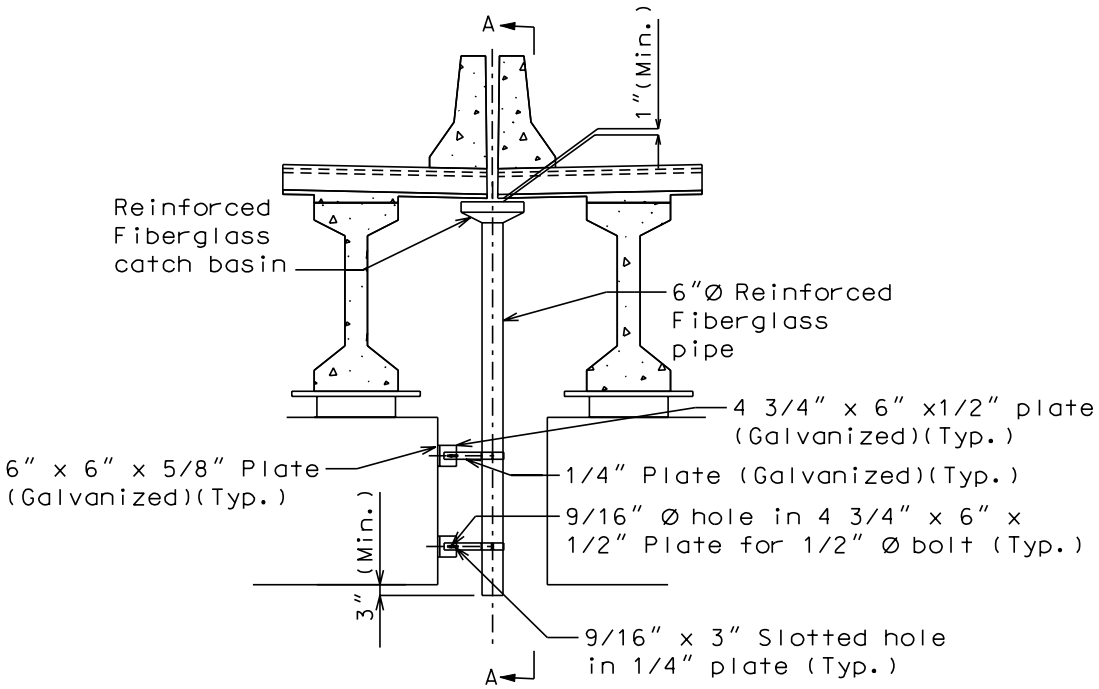

SECTION THRU JOINT

Note: If dropping water to ground from bottom of beam is not allowed, an additional pipe system shall be used.

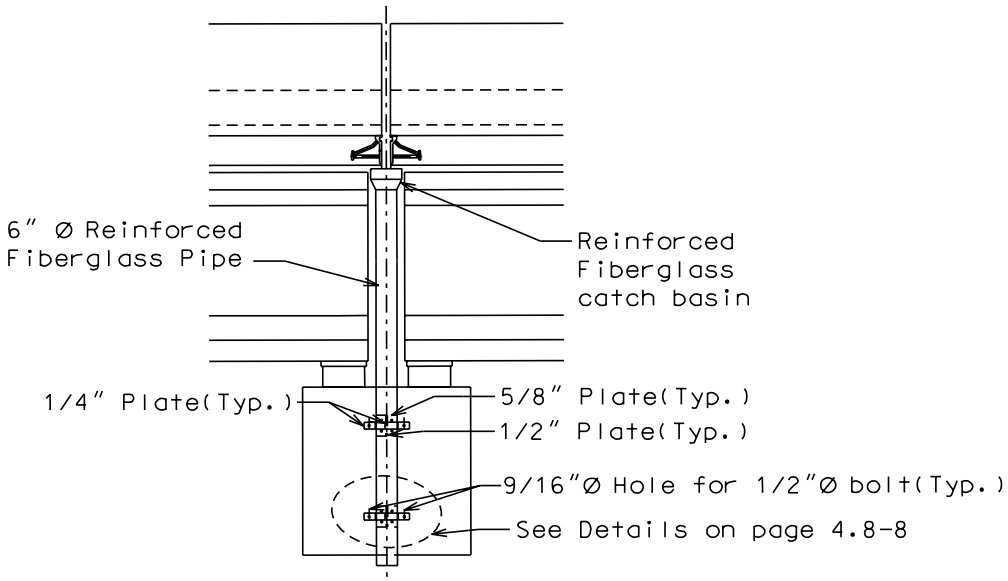

SECTION A-A

Option #3 – Three Piece Drain System, Split Median Barrier Curb at Intermediate Bent

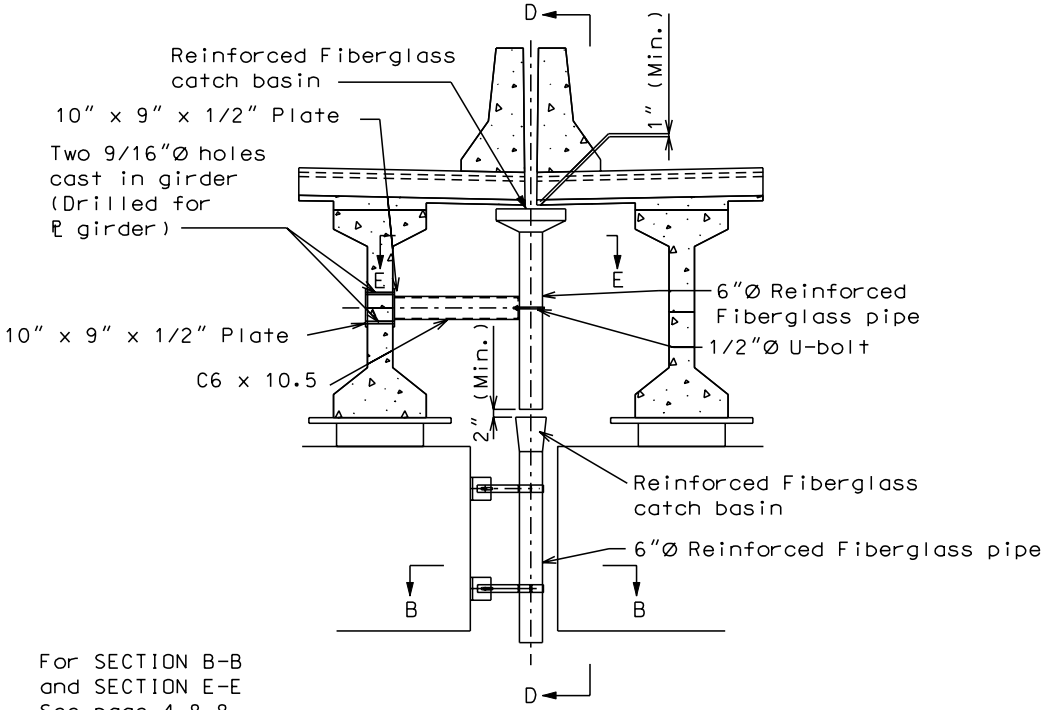

For SECTION B-B and SECTION E-E See page 4.8-8

SECTION THRU JOINT

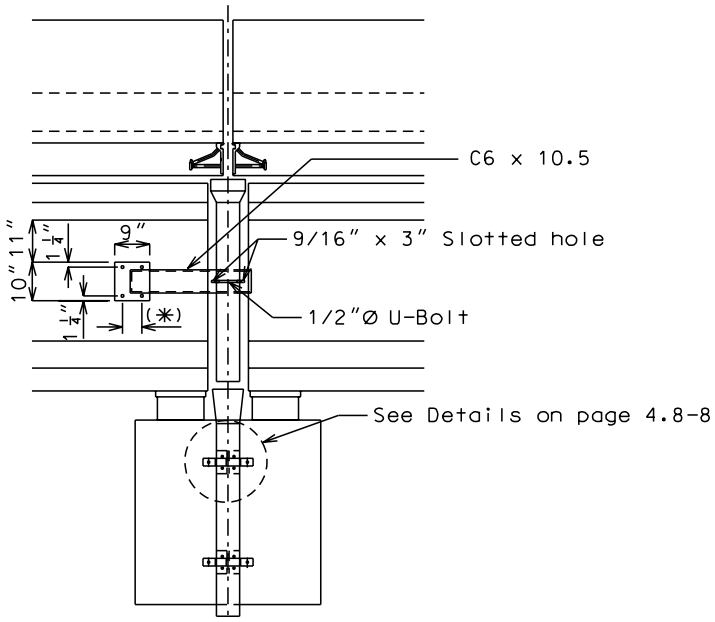

✳ Varies (Space holes to clear B1 bars in P/S gdrs. Use 6" for plate gdrs.)

SECTION D - D

Option #3 – Three Piece Drain System, Split Median Barrier Curb at Intermediate Bent

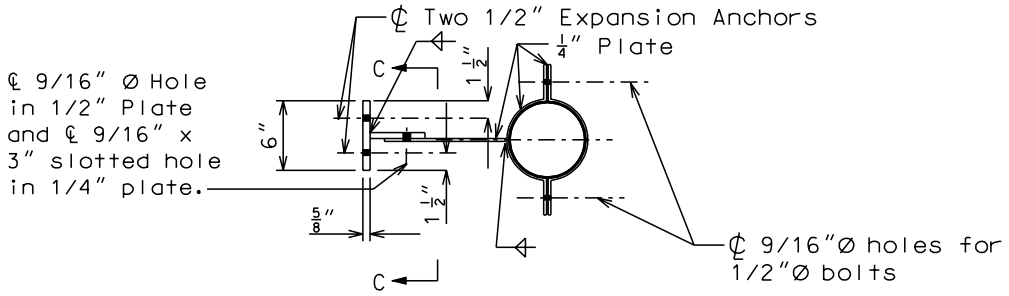

SECTION B-B

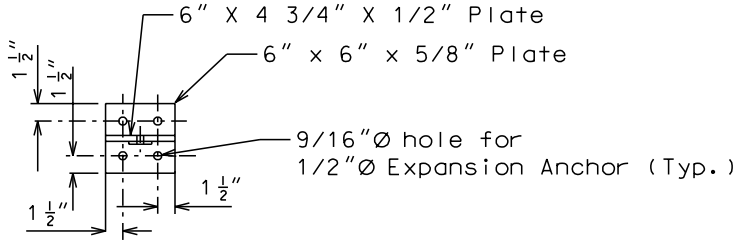

SECTION C-C

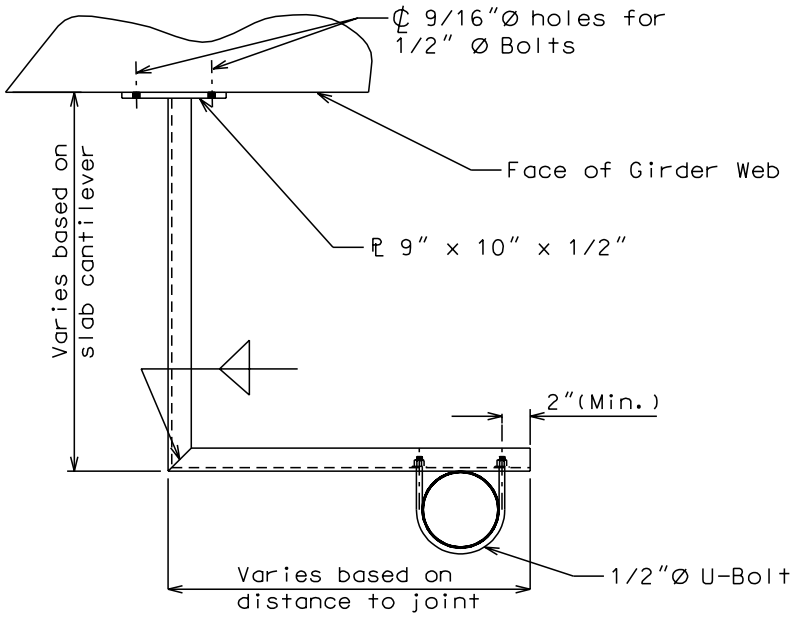

SECTION E-E

4.9 Polymer Concrete

Strip Seal Expansion Joint System may be used on rehabilitation projects where other expansion devices need to be replaced. Consult with Structural Project Manager about the use of polymer concrete with strip seals. Strip seal is to be designed with the same requirements as a normal strip seal expansion joint system.

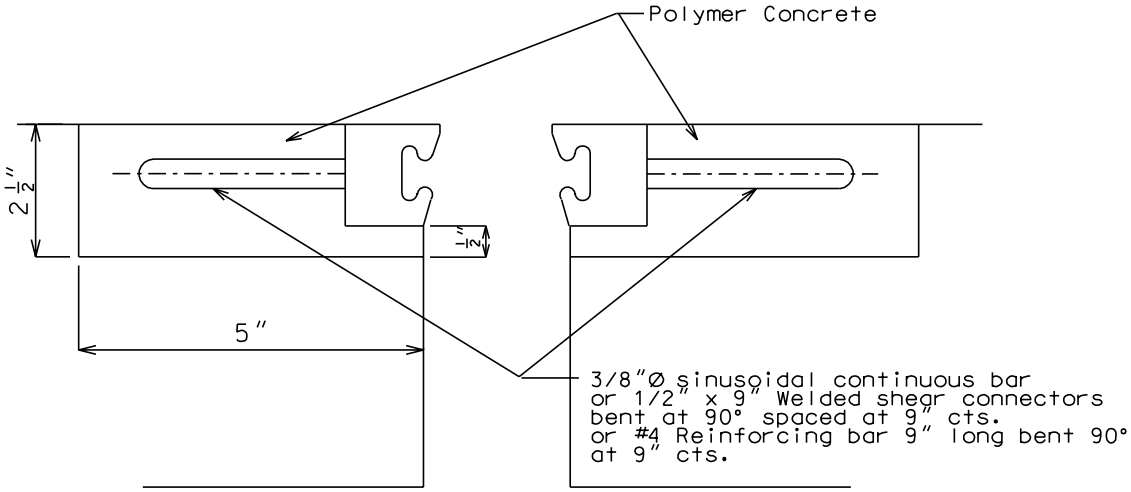

Note: Anchorage system shall be welded to strip seal steel armor with appropriate weld to meet AASHTO Fatigue for connection.

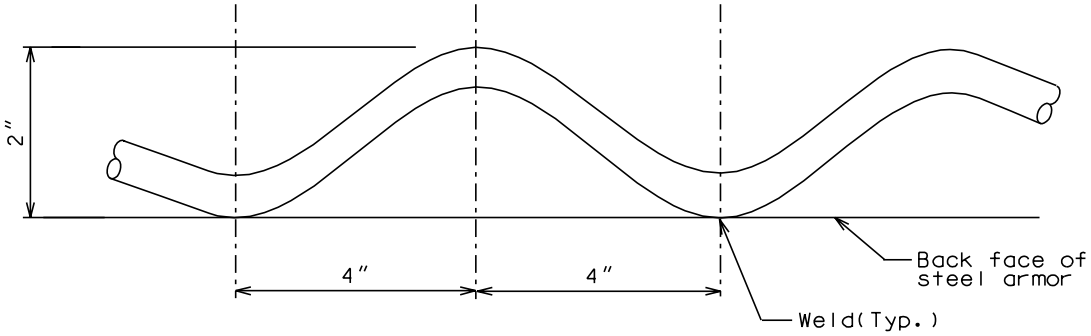

DETAIL OF SINUSOIDAL BAR

Note: A pay item exists for this type of expansion joint system. The system will be paid for under Strip Seal Expansion Joint System per linear foot. Polymer concrete will be paid for under Polymer Concrete per Cubic Foot.

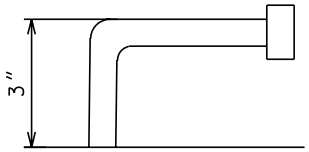

DETAIL OF SHEAR CONNECTOR
(#4 Reinforcing bar shall be bent in a similar manner)

3.55.5 Expansion Joint System (Flat Plate)

5.1 General

Flat Plate Expansion Joint System should be used where Strip Seals and Preformed Compression Joints can not be used due to large expansion lengths or curved structures and skews over 45°.

The installation width, gap = 3 1/2″ is based on a design installation temperature of 60°F.

Flat Plate expansion devices can be used on any skewed bridges.

	Max. Expansion Length (Skew = 0°)	Min. Joint Width (⊥ to Joint)
Concrete Bridge	325′ (✳)	1″
Steel Bridge	263′ (✳)	1″

(✳) Min. opening of 1″ in Flat Plate Expansion trough controls.

The max. surface gap, W ≤ 4″ does not effect flat plate expansion devices due to the fact there are no visible open joints.

5.2 Steel Structure Details

Dimensions shown are perpendicular to centerline of joint and do not vary with skew.

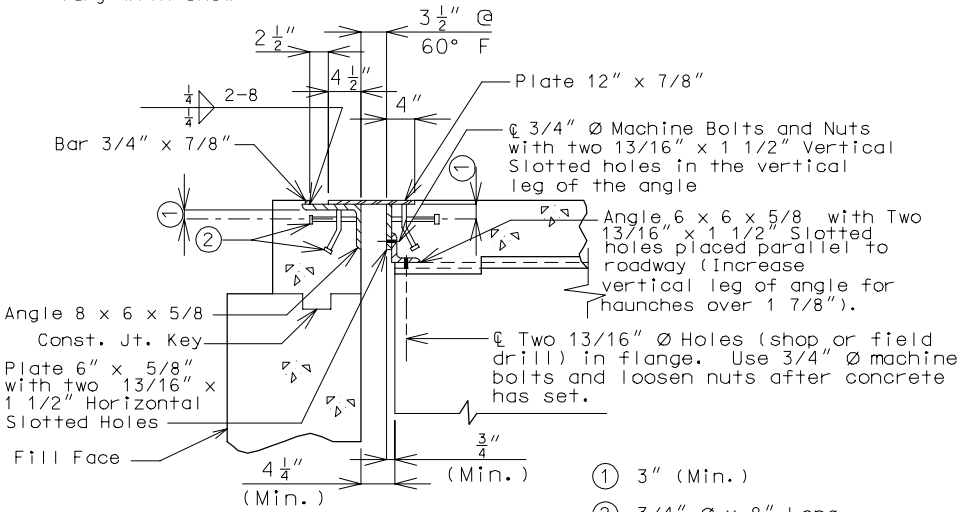

PART SECTION AT END BENT

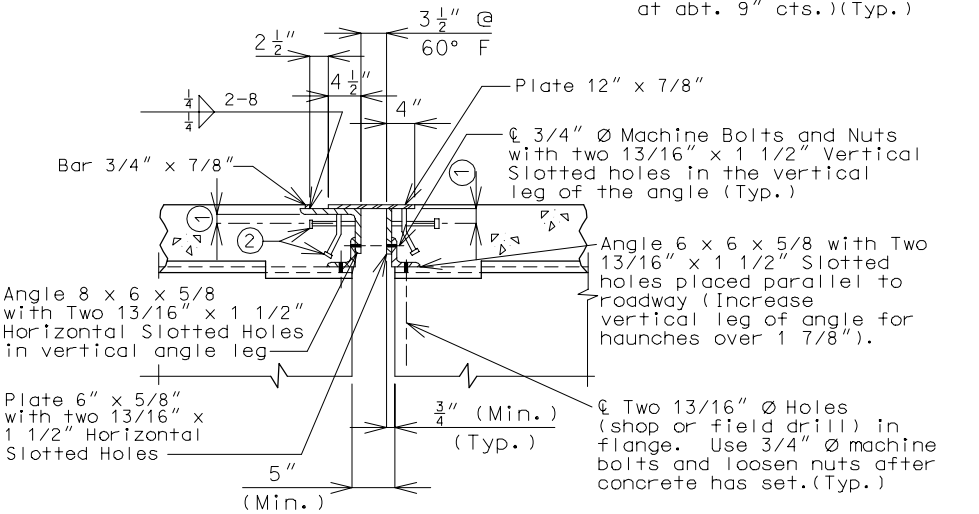

PART SECTION AT INTERMEDIATE BENT

Note:

Part longitudinal sections for bridges on grades or vertical curves having a plate type intermediate expansion device shall be detailed with the expansion plate anchor to the long span side. If equal spans, then place expansion plate anchor on the high side. For bevel plate and permissible field splice details, see this manual section.

5.3 Prestressed Structure Details

Dimensions shown are perpendicular to centerline of joint and do not vary with skew.

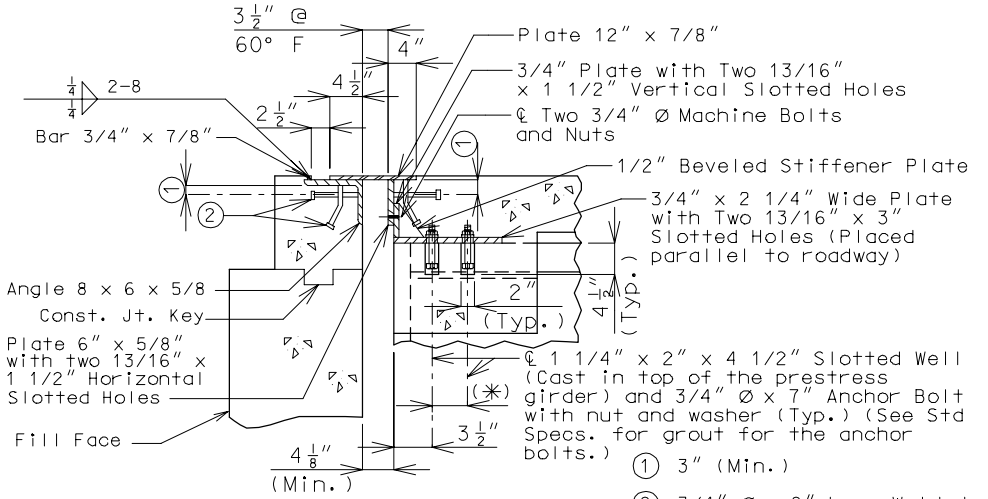

PART SECTION AT END BENT

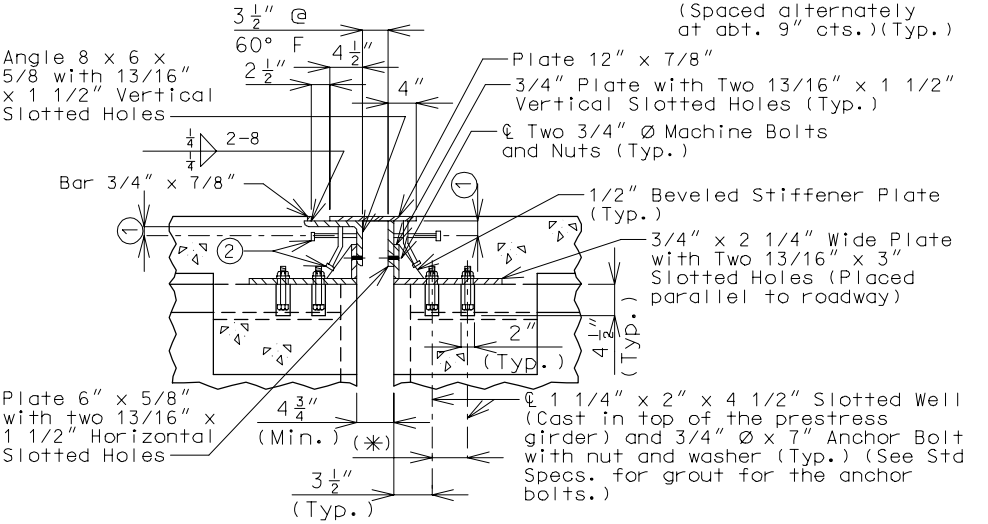

PART SECTION AT INTERMEDIATE BENT

Notes:

For bevel plate and permissible field splice details, see LRFD DG Sec. 5.5 & 5.6.

Part longitudinal sections for bridges on grades or vertical curves having a plate type intermediate expansion device shall be detailed with plate anchor to the long span. If equal spans, then place expansion plate anchor on the high side.

(✳) Spaced between prestress girder reinforcing bars.

5.4 Typical Part Plan Details (Steel Structures)

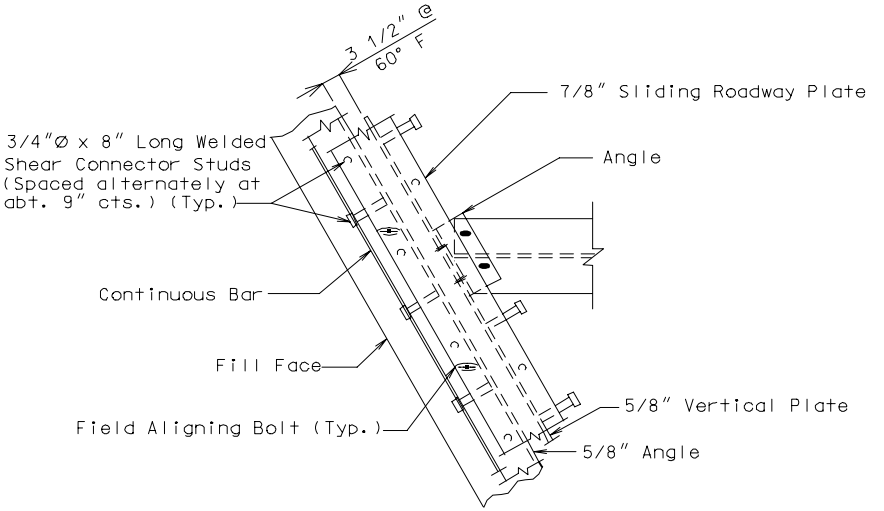

PART PLAN AT END BENT

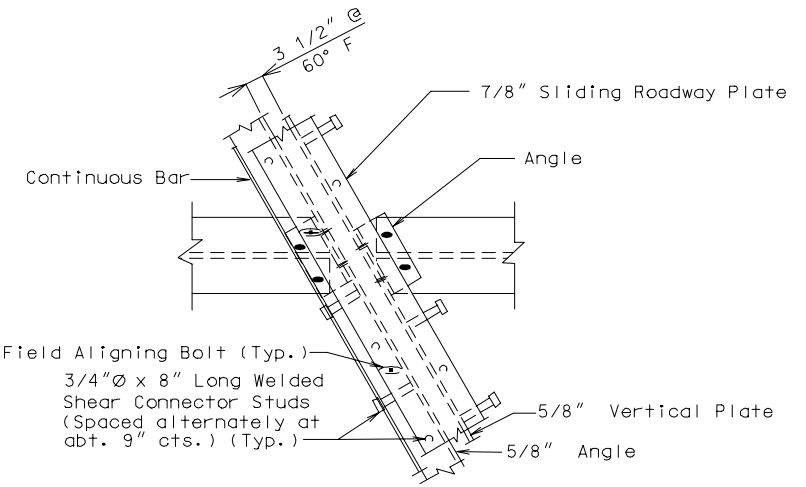

PART PLAN AT INTERMEDIATE BENT

Note: Vent holes not shown for clarity.

Flat Plate Expansion Joint System

Typical Part Plan Details (Prestressed Structures)

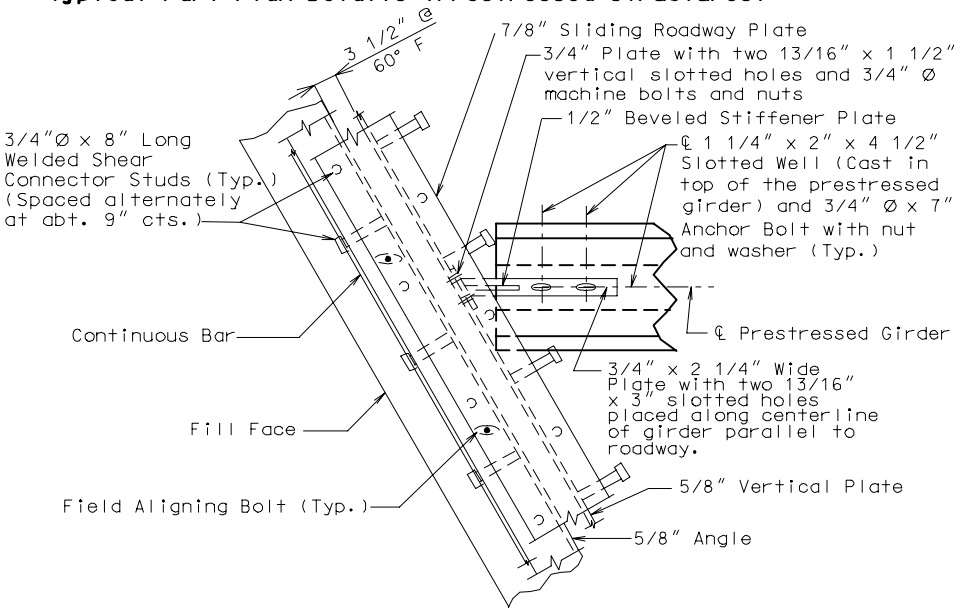

PART PLAN AT END BENT

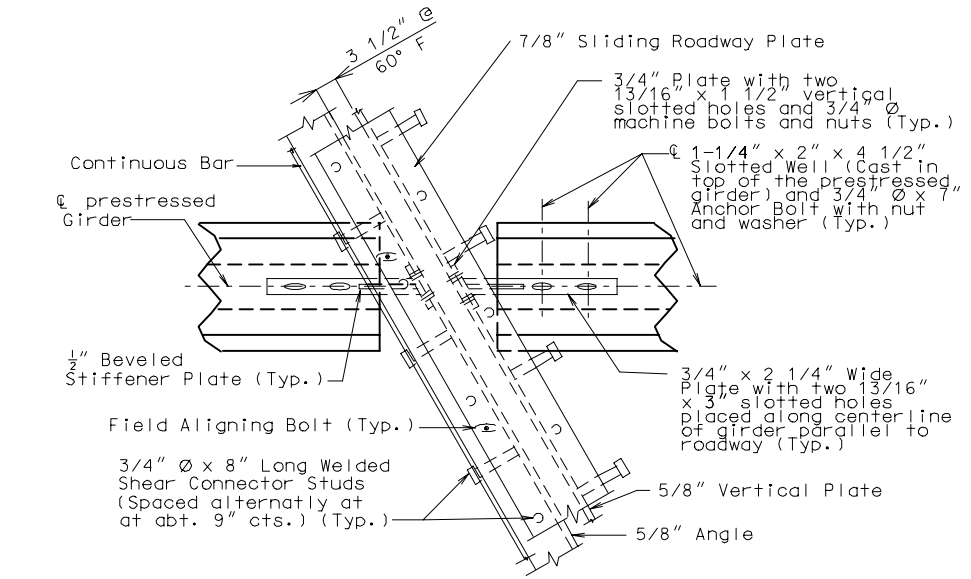

PART PLAN AT INTERMEDIATE BENT

Note: Vent holes not shown for clarity.

5.5 *Typical Aligning Bolt & Bevel Plate Details*

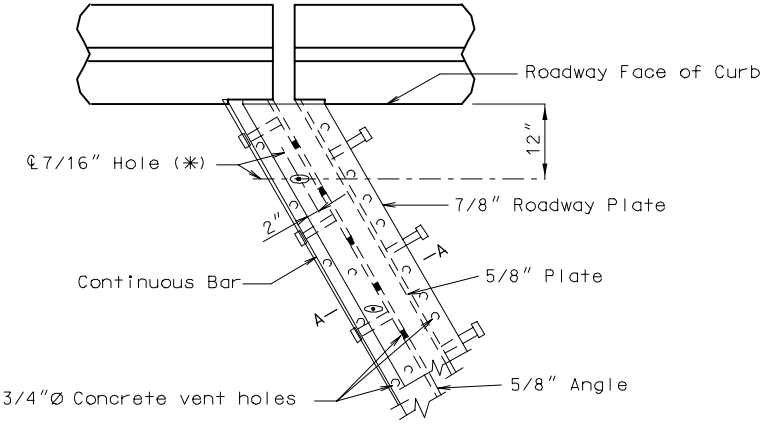

PART PLAN

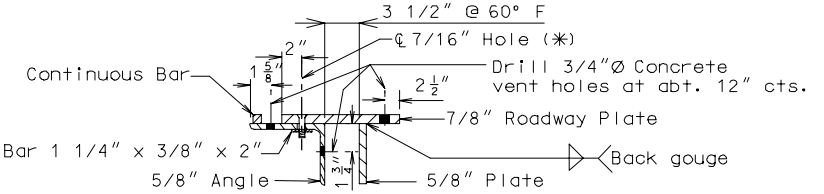

SECTION A-A
(TYPICAL)

(✳) 7/16" Ø Hole, countersunk in the roadway plate; with slotted hole 1/2" x 1" in the angle; and the bar 1 1/4" x 3/8" x 2" tapped for 3/8" Ø flat head stove bolt at about 4'-0" cts. Remove bolt after concrete has set.
Offset vertical and horizontal concrete vent holes in 5/8" angle (Do not alternate)

TYPICAL BEVEL PLATE

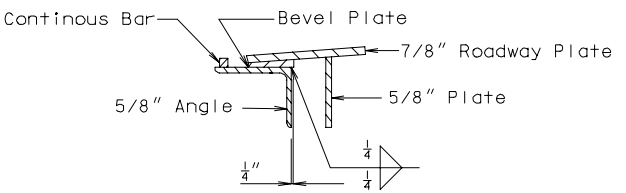

PART SECTION
(TYPICAL)

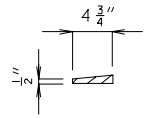

TYPICAL BEVEL PLATE

Note:
Use the bevel plate (At the end bents only) when the grade of the slab is 3.0% or more plate is required.

Modify the roadway plate, the 5/8" vertical plate and the continuous bar when the bevel plate is required.

Flat Plate Expansion Joint System

5.6 *Typical Field Splice Details*

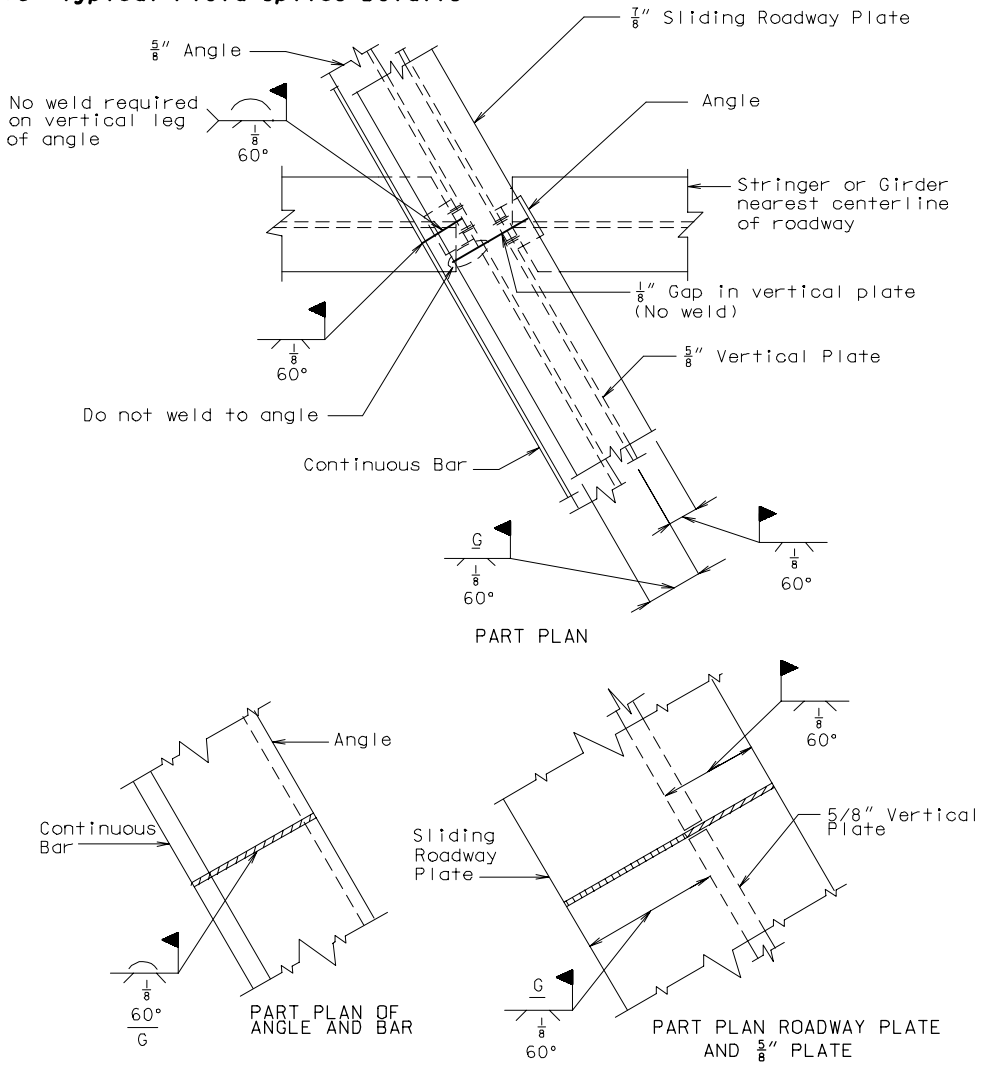

Note:

If the expansion device length is over 60 feet, splicing is permissible.

Details for a steel structure shown, prestress details are similar.

5.7 PLAN OF BEAM AT BEARINGS

Flat Plate Expansion Joint System

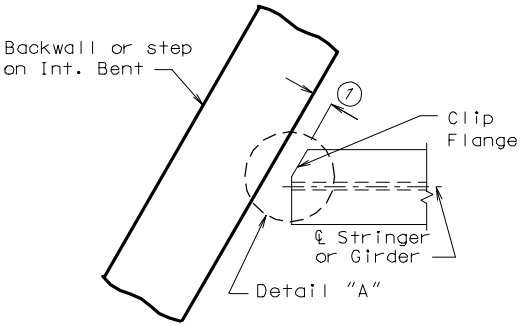

PART PLAN AT BACKWALL

(1) Expansion Device:
Top Flange = Expansion Device Gap plus $\frac{3}{4}$" min.
Bottom Flange = Expansion Device Gap Min.

No Expansion Device:
Bottom Flange = 2" min.
Do not clip top flange

Stepped Int. Bent:
Top and/or Bottom = 2" min.

Note:
Clip of top and bottom flanges need not be the same.

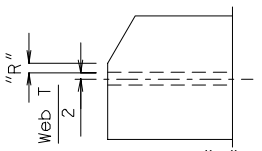

DETAIL "A"
(TYPICAL)

Note:
"R" = $\frac{1}{2}$" (Min.) For plate girder structures.

TABLE FOR "R" - WIDE FLANGE BEAMS						
Nominal Flange Width (✳)	$8\frac{1}{4}$"	9"	10"	$10\frac{1}{2}$"	$11\frac{1}{2}$"	12"
"R"	0.54"	0.54"	0.64"	0.70"	0.75"	0.80"

✳ Note: For wide flange beams with flange widths other than those shown refer to AISC Steel Construction Manual for "R".

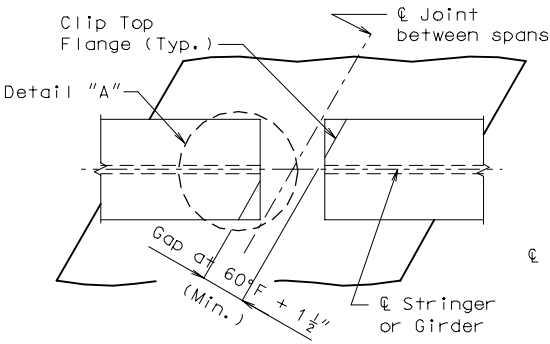

STRINGER OR GIRDER
INTERMEDIATE BENTS

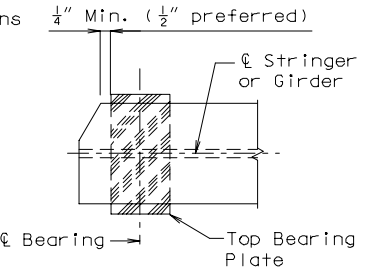

STRINGER OR GIRDER
WITH BEARING AT
END BENTS

Note:
Details for a steel structure shown, details for a prestress structure similar.

5.8 BARRIER CURB DETAILS

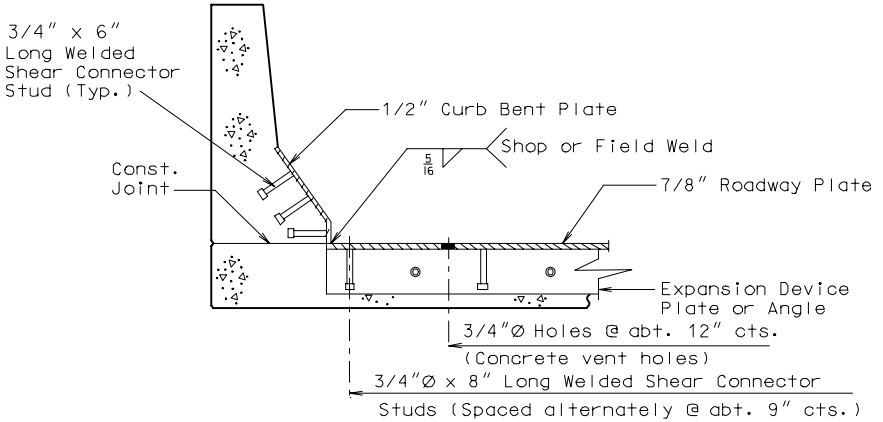

SECTION B-B

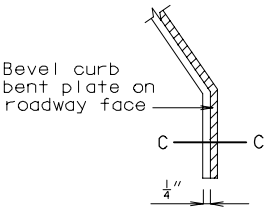

PART ELEVATION AT END
OF BEVELED CURB BENT PLATE

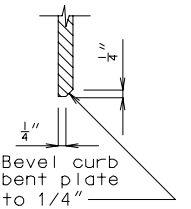

SECTION C-C

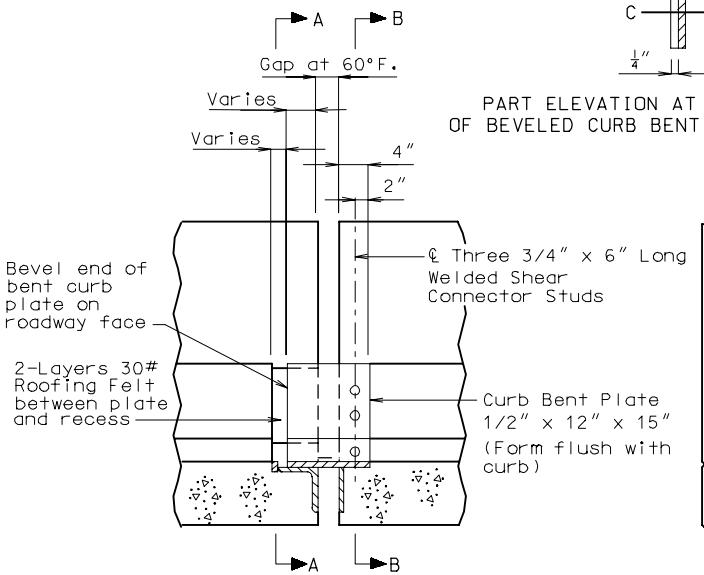

ELEVATION OF BARRIER CURB

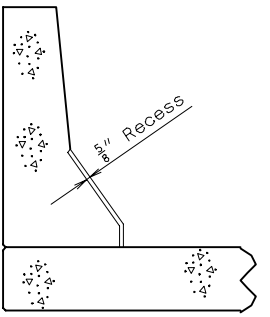

PART SECTION A-A

5.9 Miscellaneous Details

Flat Plate Expansion Joint System

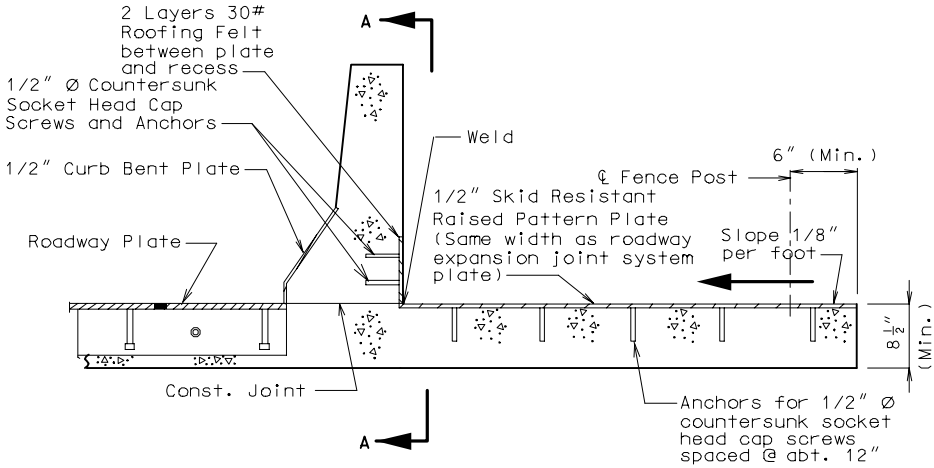

TYPICAL SIDEWALK DETAILS

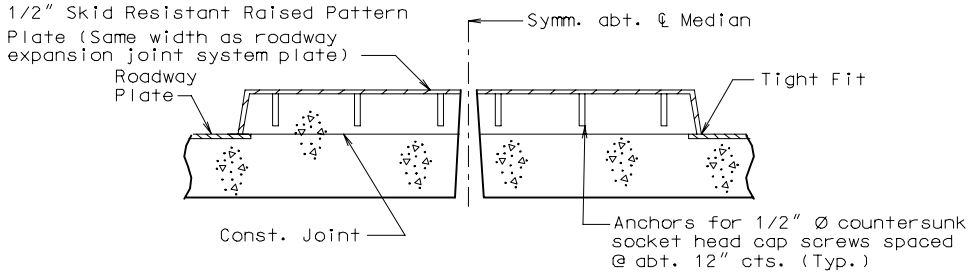

TYPICAL MEDIAN DETAILS

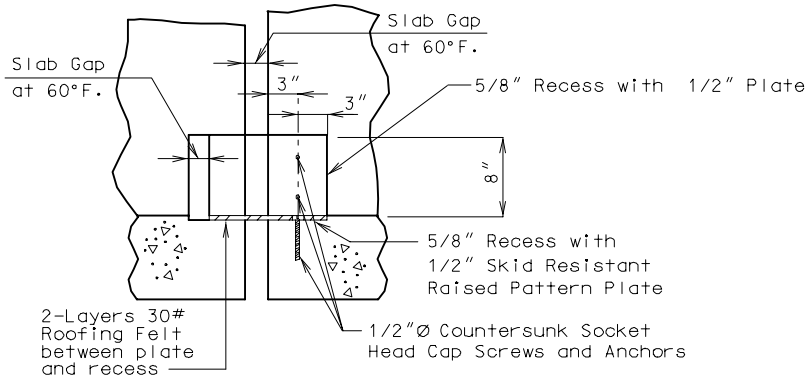

PART SECTION A-A

3.35.6 Expansion Device (Finger Plate)

6.1 GENERAL

The max. roadway surface gap (W) shall meet the following criteria:

LRFD 14.5.3.2 When W(Long.) < 8″, Then W(Tran.) < 3″.

OR

When W(Long.) > 8″, Then W(Tran.) < 2″.

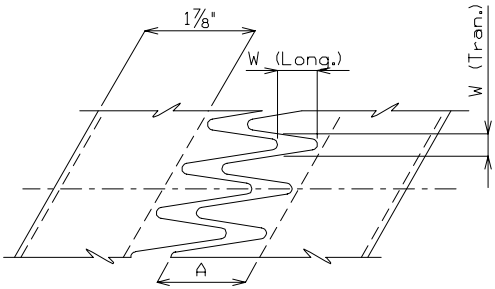

The min. finger overlap = 1.5″

Expansion lengths are calculated from the total movement value by the following equation:

$$\text{Expansion length} = \frac{\text{Movement}}{1.2(\alpha)(T)}$$

Where:
For Concrete:
α = 0.000006 ft/ft/°F
T = 120°F

For Steel:
α = 0.0000065 ft/ft/°F
T = 150°F

Max. Length of Exp. (✳)		Total Movement	Gap at 60° F
Concrete	Steel		
385′	284′	4″	2 3/4″
578′	427′	6″	3 1/2″

(✳) Longer lengths are possible but they must be designed.

6.2 DETAILS AT END BENT

Finger Plate Expansion Joint System

Dimensions shown are perpendicular to centerline of joint and do not vary with skew (Unless otherwise noted).

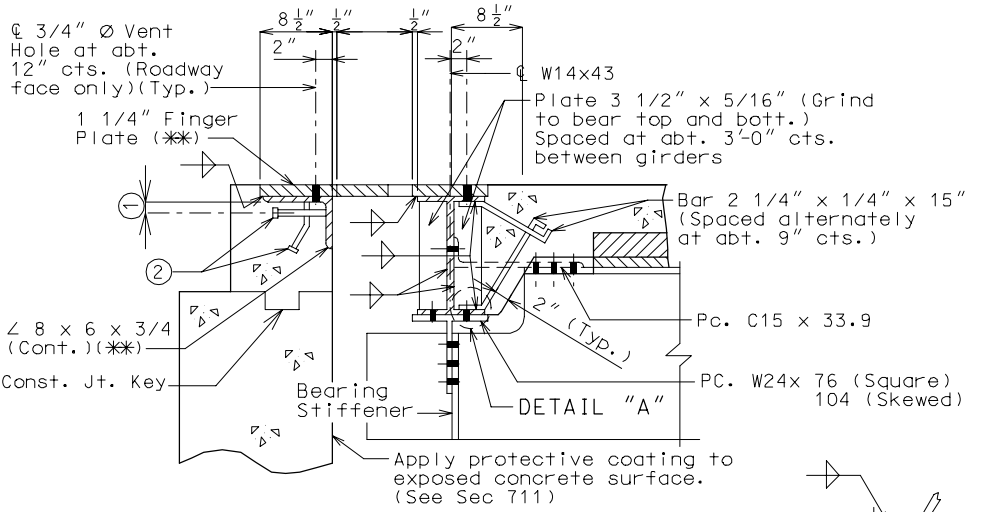

PART SECTION THRU EXPANSION DEVICE
(Steel Structure)

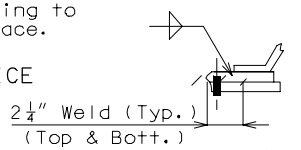

DETAIL "A"

① 3" (Min.)

② 3/4" Ø x 8" Long Welded Shear Connector Studs (Spaced alternately at abt. 9" cts.)(✱✱)

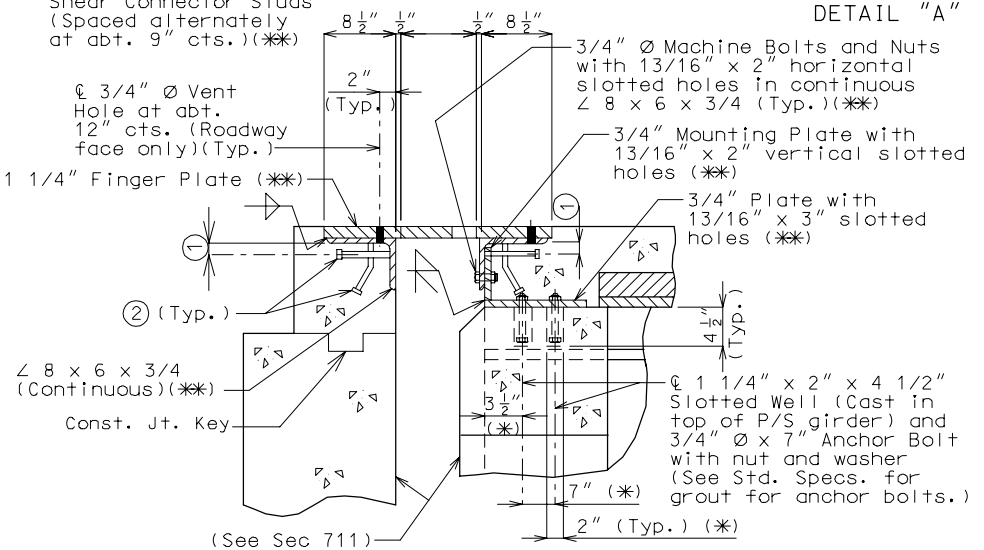

PART SECTION THRU EXPANSION DEVICE
(Prestressed Structure)

(✱) Dimension along ℄ Girder

(✱✱) When distance "A" or "D" shown in LRFD DG Sec. 6.3 is greater than 9" or 12", respectively, then the details of supporting angles, mounting plates, shear studs and finger plate thickness need to be specially designed. Mounting Plates shall not be less than supporting angle in thickness.

DETAILS AT INT. BENT

Finger Plate Expansion Joint System

Dimensions shown are perpendicular to centerline of joint and do not vary with skew (Unless otherwise noted).

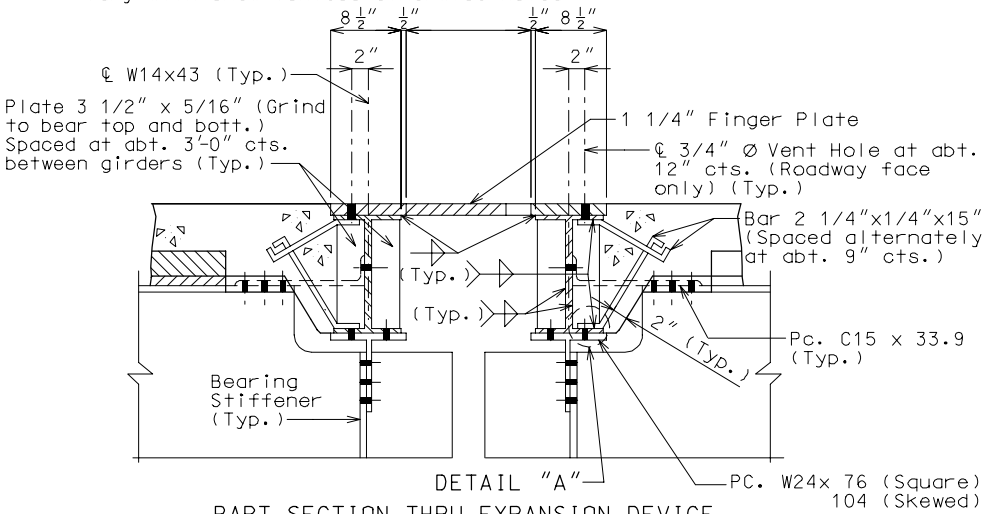

PART SECTION THRU EXPANSION DEVICE
(Steel Structure)

① 3" (Min.)

② 3/4" Ø x 8" Long Welded Shear Connector Studs (Spaced alternately at abt. 9" cts.) (Typ.)(✱✱)

Note: for Details "A" see page 6.2-1.

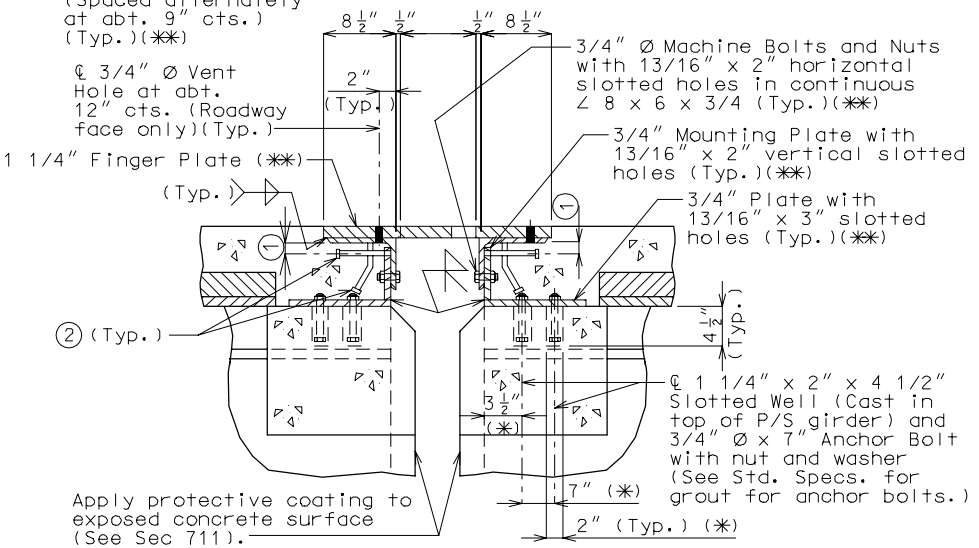

PART SECTION THRU EXPANSION DEVICE
(Prestressed Structure)

(✱) Dimension along ℄ Girder

(✱✱) When distance "A" or "D" shown in LRFD DG Sec. 6.3 is greater than 9" or 12", respectively, then the details of supporting angles, mounting plates, shear studs and finger plate thickness need to be specially designed. Mounting Plates shall not be less than supporting angle in thickness.

DETAILS AT INT. BENT
(Prestressed to Steel)

Finger Plate Expansion Joint System

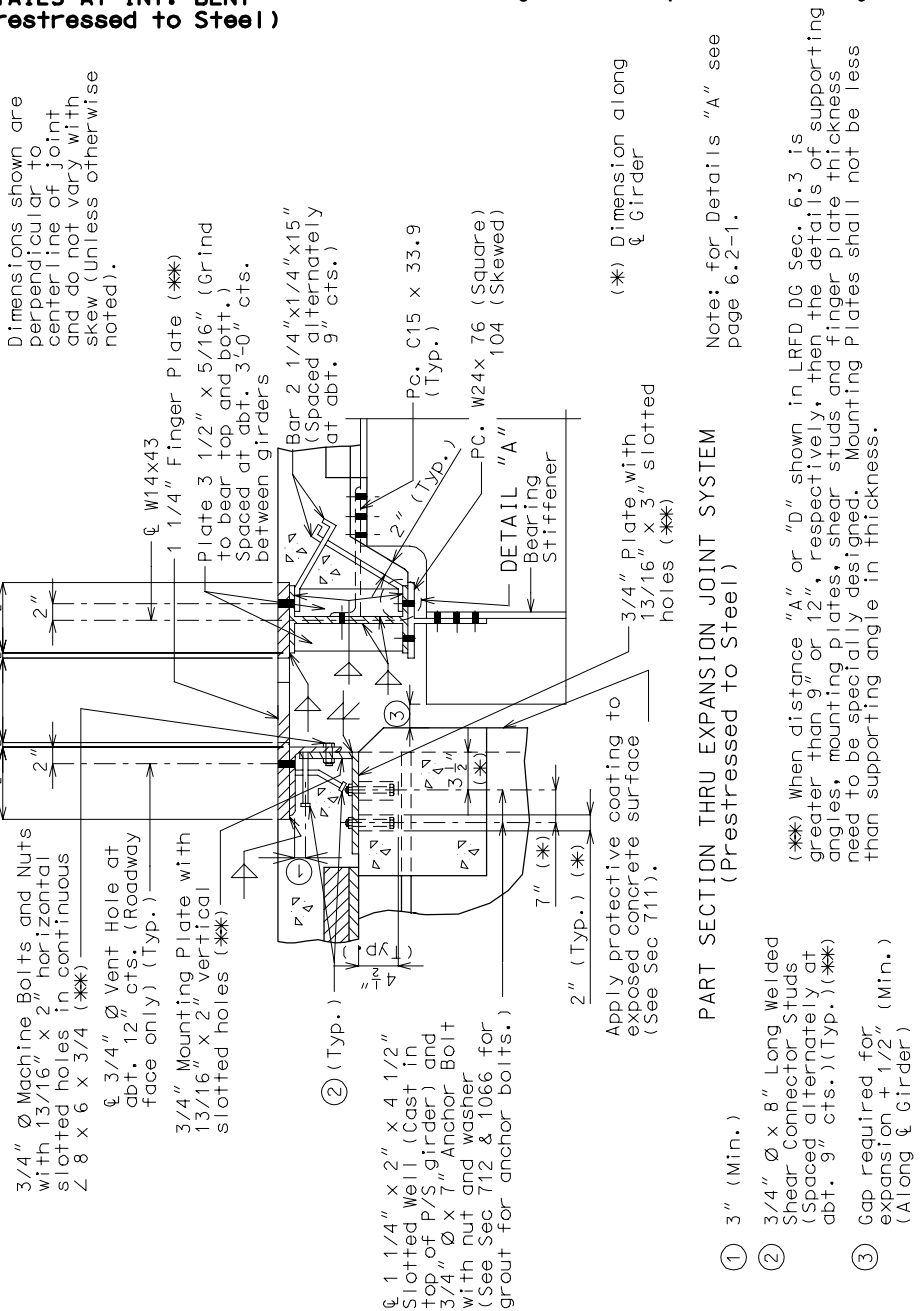

DETAILS OF W24 PIECE

Finger Plate Expansion Joint System

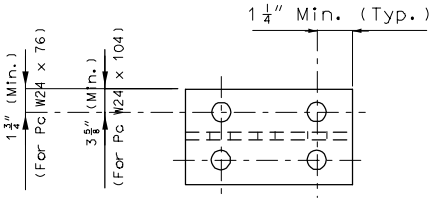

PLAN

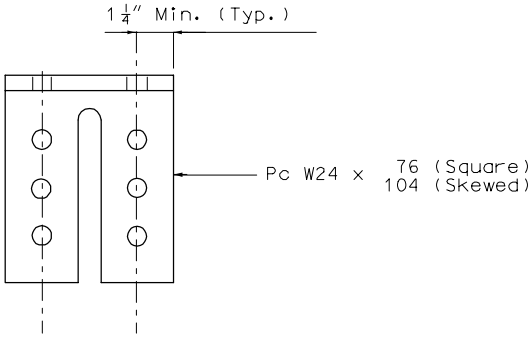

ELEVATION OF PIECE W24 x 76 (SQUARE) / 104 (SKEWED)

Note:
Place the above details near "Part Section Thru Expansion Joint System For Finger Plates".

All holes shown for connections to be subpunched 11/16" Ø (shop or field drill) and reamed to 13/16" Ø in field.

6.3 TYPICAL PLAN OF PLATE

Finger Plate Expansion Joint System

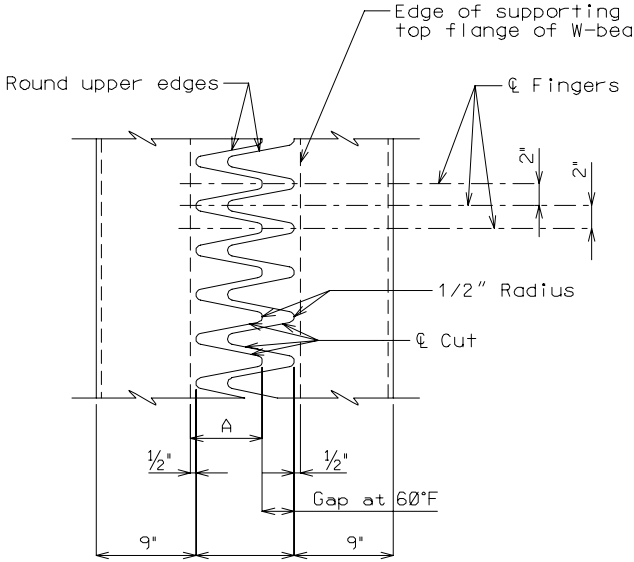

TYPICAL PLAN OF PLATE
(SQUARE)

4" MOVEMENT		
Skew Angle	A	B
Square	$7\frac{1}{2}$"	2"
1° - 13°	$7\frac{1}{2}$"	$2\frac{1}{8}$"
14° - 19°	$7\frac{1}{2}$"	$2\frac{3}{16}$"
20° - 37°	$7\frac{1}{2}$"	$2\frac{1}{4}$"
38° - 46°	7"	$2\frac{5}{16}$"
47° - 53°	$6\frac{1}{2}$"	$2\frac{3}{8}$"
54° - 58°	6"	$2\frac{7}{16}$"
59° - 60°	$5\frac{1}{2}$"	$2\frac{7}{16}$"

6" MOVEMENT		
Skew Angle	A	B
Square	$9\frac{1}{2}$"	2"
1° - 16°	$9\frac{1}{2}$"	$2\frac{1}{16}$"
17° - 29°	$9\frac{1}{2}$"	$2\frac{1}{8}$"
30° - 39°	9"	$2\frac{3}{16}$"
40° - 48°	$8\frac{1}{2}$"	$2\frac{1}{4}$"
49° - 54°	$7\frac{1}{2}$"	$2\frac{5}{16}$"
55° - 60°	7"	$2\frac{3}{8}$"

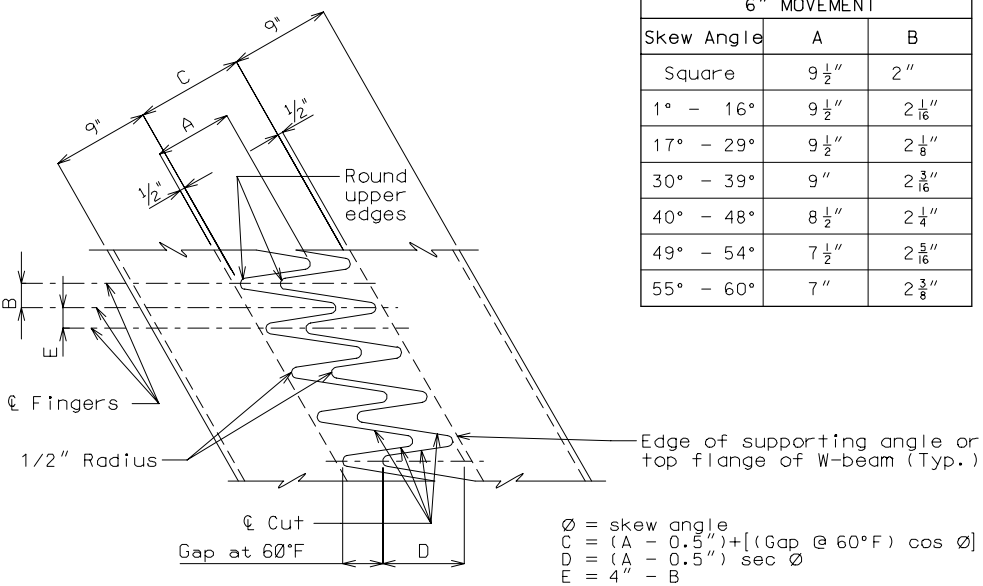

Ø = skew angle
C = (A - 0.5")+[(Gap @ 60°F) cos Ø]
D = (A - 0.5") sec Ø
E = 4" - B

TYPICAL PLAN OF PLATE
(SKEWED)

6.4 BARRIER CURB DETAILS

Finger Plate Expansion Joint System

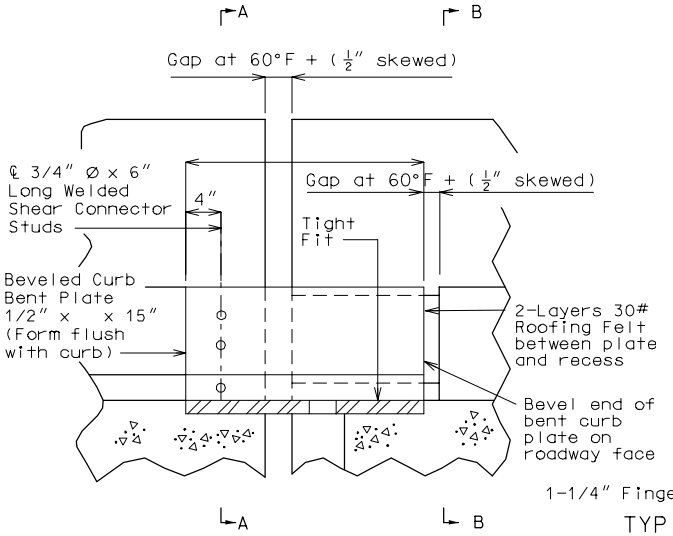

PART ELEVATION OF BARRIER CURB (END BENT)

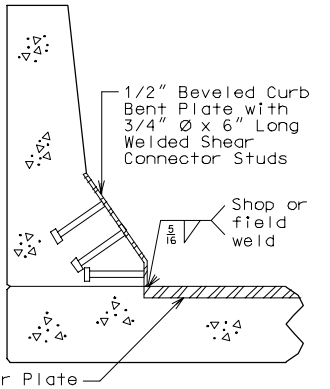

TYPICAL PART SECTION A-A

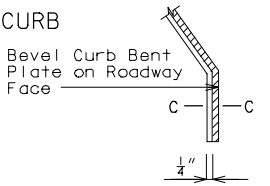

PART ELEVATION AT END OF BEVELED CURB BENT PLATE

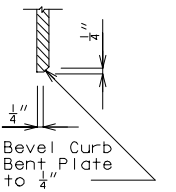

SECTION C-C

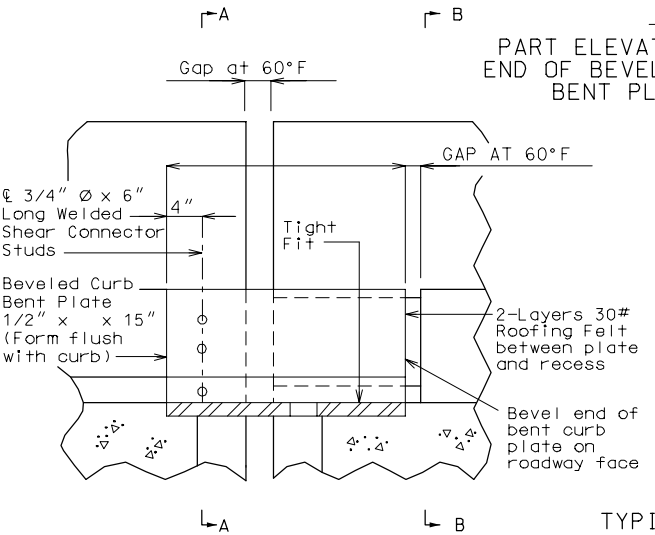

PART ELEVATION OF BARRIER CURB (INTERMEDIATE BENT)

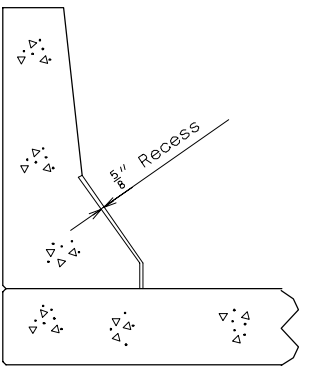

TYPICAL PART SECTION B-B

BARRIER CURB DETAILS (Cont.) **Finger Plate Expansion Joint System**

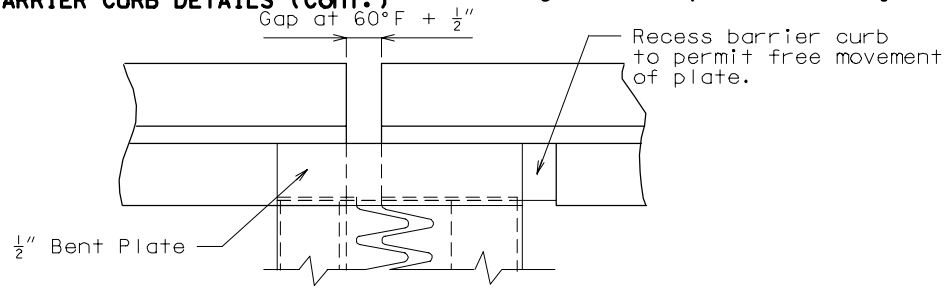

PART PLAN OF CURB AT END BENT (SQUARE)

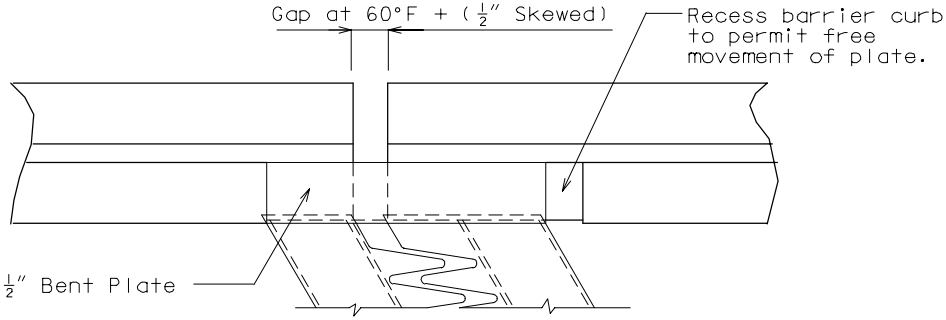

PART PLAN OF CURB AT END BENT (SKEWED)

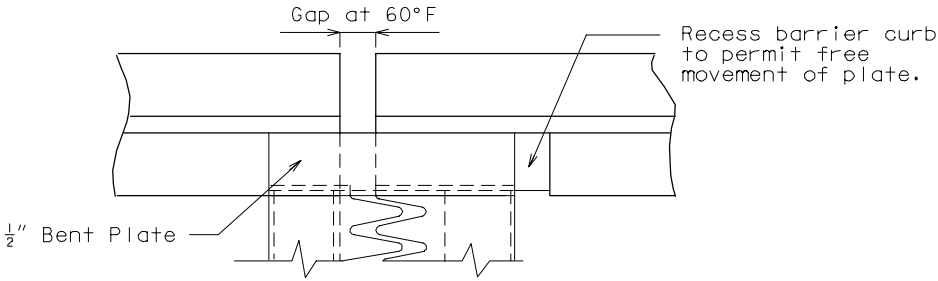

PART PLAN OF CURB AT INT. BENT (SQUARE)

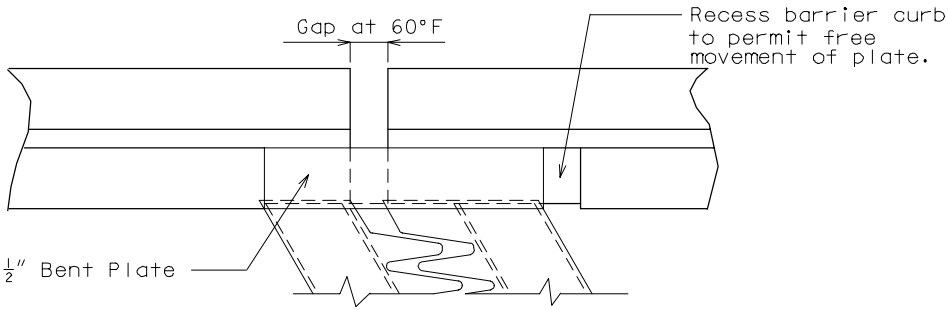

PART PLAN OF CURB AT INT. BENT (SKEWED)

6.5 MEDIAN BARRIER CURB DETAILS

Finger Plate Expansion Joint System

For the details not shown of median barrier bridge curb, see the safety barrier curb details in LRFD DG Sec. 3.32, The Design Devision Standard Plans (Concrete median barrier), and the Bridge Design Layout.

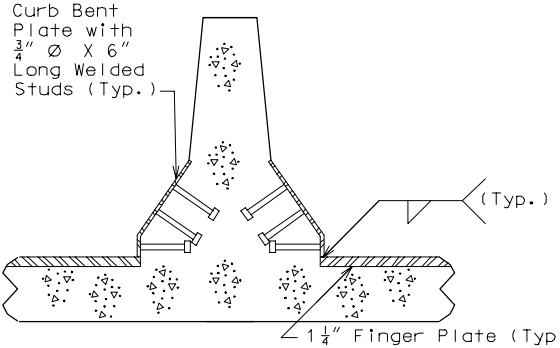

TYPICAL PART SECTION A-A

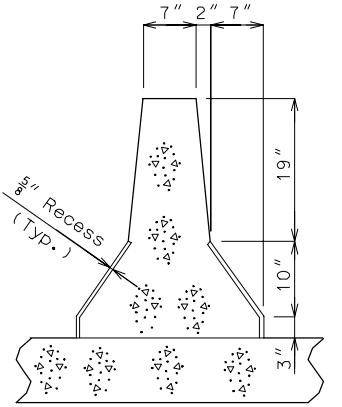

TYPICAL PART SECTION B-B

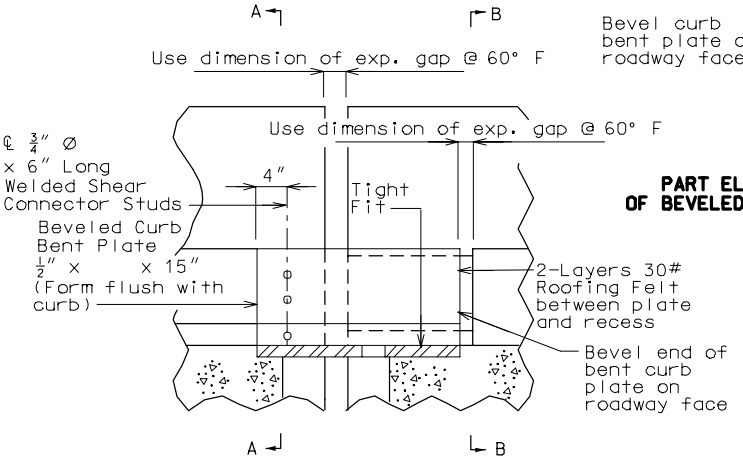

PART ELEVATION OF BARRIER CURB (INTERMEDIATE BENT)

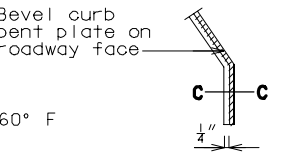

PART ELEVATION AT END OF BEVELED CURB BENT PLATE

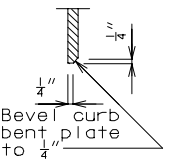

SECTION C-C