LRFD

Section 3.70

New: January 2005

CLICK HERE TO Index

Index

3.70.1 General

3.70.2 Details

2.1 Stub Bents (Non-Integral)

2.2 Stub Bents (Sliding Integral)

GENERAL

For General Information and Design Loadings, refer to LRFD DG Sec. 3.77.

STUB BENTS (NON-INTEGRAL)
COLUMN HEIGHT LESS THAN 5'-0"

Dimensions (Except Deck Girder)

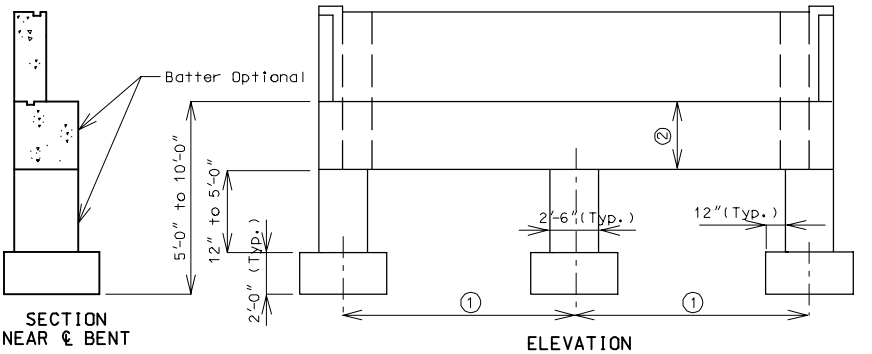

1. Use one more column than would be required for a normal bent, except column spacing should not be less than about 12'-0".
2. Use 2'-0" as a minimum except for bents with deep backwalls (High plate girders) in which case the minimum should be 2'-6".

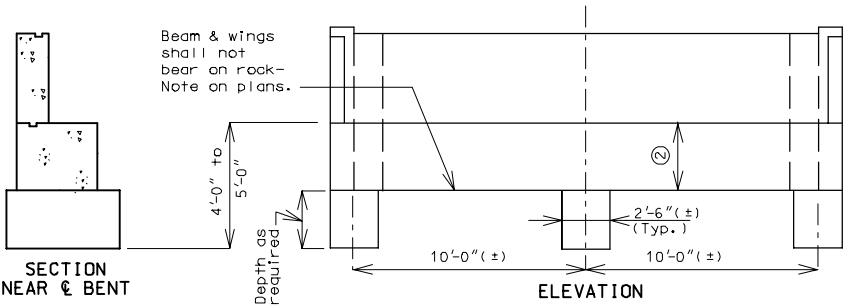

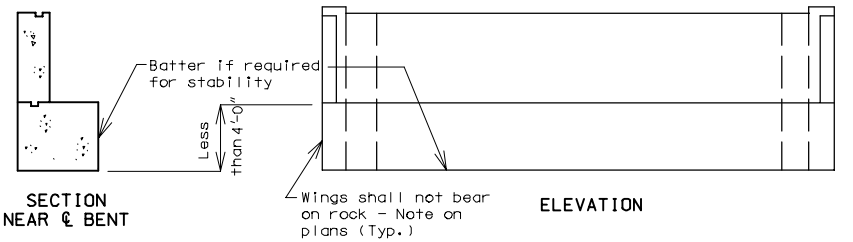

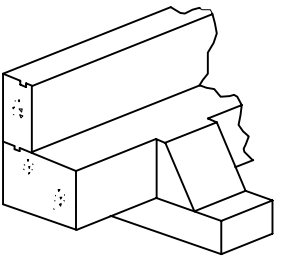

ALTERNATE FOR LONG FOOTINGS

STUB BENT (NON-INTEGRAL)

Reinforcement (Except Deck Girder)

All reinforcement shown on this page is minimum reinforcement.

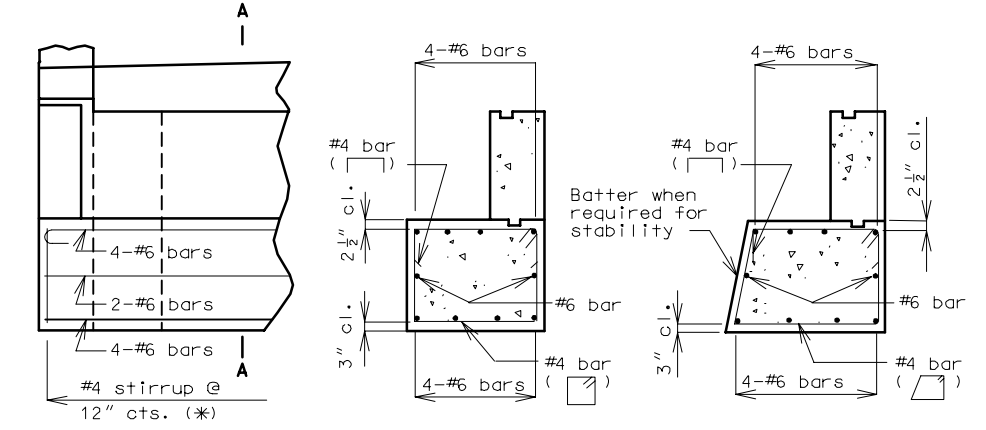

PART ELEVTION

SECTION A-A

SECTION A-A

STUB BENT EMBEDDED IN ROCK

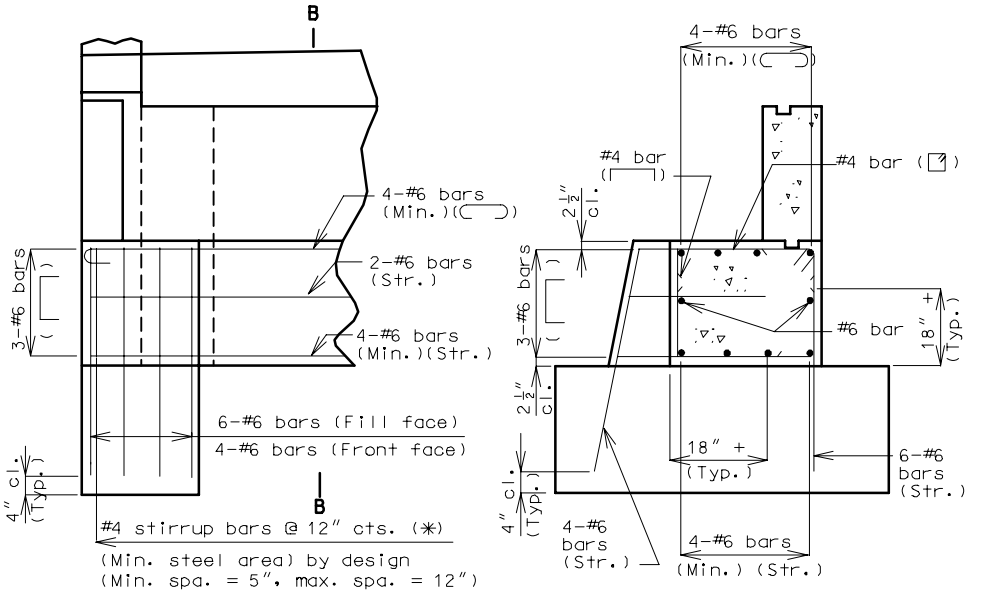

PART ELEVTION

SECTION B-B

STUB BENT ON LONG FOOTINGS

(✳) Use additional #4 (6") hairpin bars under bearings with 6" maximum spacing of combined stirrups and hairpins. (These additional #4 bars are not required for prestress double-tee girder structures.)

STUB BENTS (SLIDING INTEGRAL) ON ROCK

Dimensions (Except Deck Girder)

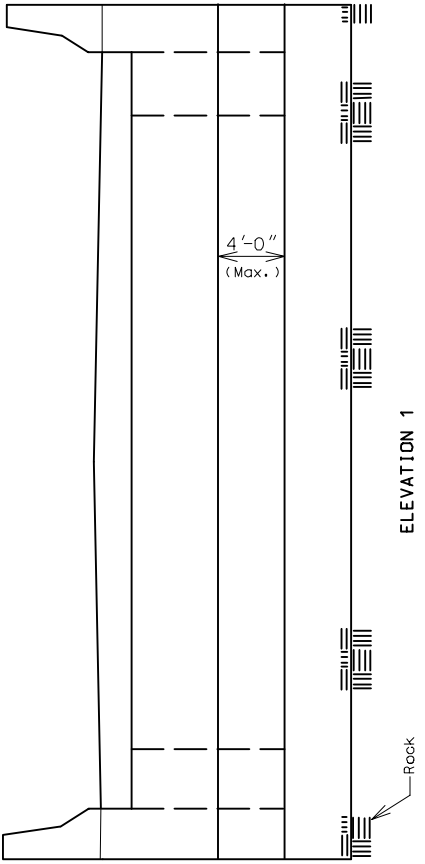

ELEVATION 1

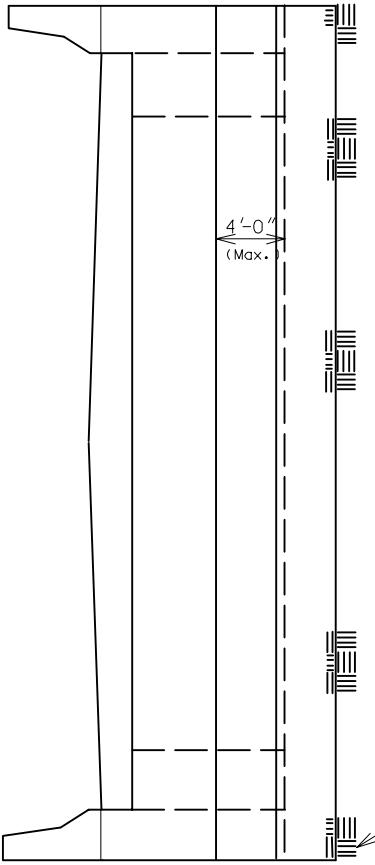

ELEVATION 2

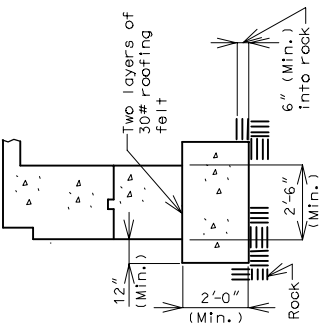

SECTION AT ℄ BENT

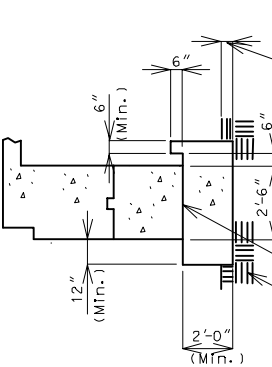

SECTION AT ℄ BENT (Seismic Detail)

STUD BENT (SLIDING INTEGRAL)

Reinforcement (Except Deck Girder)

Bent without Seismic Details

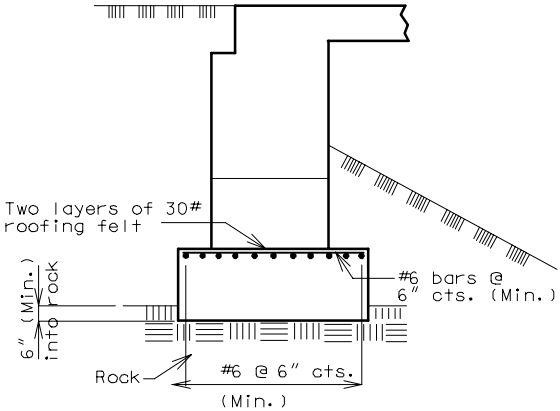

STUB BENT ON ROCK

Bent including Seismic Details

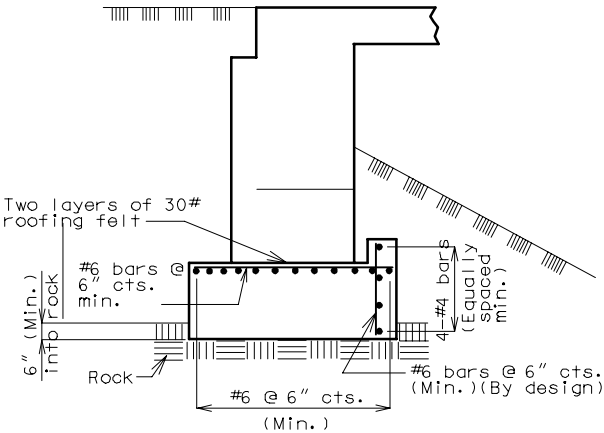

STUB BENT ON ROCK