LRFD

Section 8.1

New: April 2005

CLICK HERE TO Index

8.1.1 Overview
1.1 Introduction
1.2 Bridge Survey
1.3 Beginning Preliminary Design
8.1.2 Bridges/Boxes
2.1 End Slopes/Spill Fills
2.2 Wing Lengths
2.3 Live Load Determination
2.4 Skew Angle
2.5 Structure Type Selection
2.6 Box Culverts
2.7 Girder Type Selection
2.8 Longer Bridges
2.9 Staged Construction
2.9.1 Temporary Barriers
2.10 Earthquake Consideration
2.11 Replacing an Existing Structure
2.12 Temporary Bridges
2.13 Bridges Over Railroads
2.14 Historical Bridge Considerations
2.15 Preliminary Cost Estimate
2.16 Bridge Memorandums (Memos)
2.17 Soundings (Borings)
2.18 Substructure Type
2.19 Type of Footings
2.20 Types of Piling
2.21 Estimating the Lengths of Friction Piles
2.22 Drilled Shafts
2.23 Excavation Datum
2.24 Seal Courses
2.25 Cofferdams
2.26 Webs
2.27 Protection of Spill Slopes
2.28 Design Exceptions
2.29 Finishing Up Design Layout
2.30 FHWA Submittal
2.31 Aesthetic Enhancements

8.1.3 Overlays/Rehabs/Redecks/Widenings
3.1 Overview
3.2 Bridges on Resurfacing Projects
3.3 Curb Type and Height
3.4 Bridge Rehab Checklist

8.1.4 Retaining Walls
4.1 Overview
4.2 Types of Walls
4.3 MSE Walls
4.4 CIP Concrete Walls
4.5 Obstructions

8.1.1 Overview

8.1.1.1 Introduction

The Preliminary Design of a structure begins with the district submitting a Bridge Survey and Preliminary Geotechnical Report indicating their need for a structure, and ends with the completion of the Design Layout or TS&L submittal (type, size and location). This section is intended to be a guide for those individuals assigned the task of performing the Preliminary Design or "laying out" of a structure.

The types of structures can be broken into five categories:

1.) Bridge Over Water
2.) Bridge Over Roadway or Railroad
3.) Box Culvert Over Water
4.) Retaining Wall
5.) Rehabilitation or Overlay of Existing Structure

This guide is intended to assist the Preliminary Designer in all areas of Preliminary Design except hydraulics. That topic is covered in great detail in LRFD DG Sec. 8.2 .

Project Development Manual

Several references are made to the Project Development Manual (PDM). This was referred to in the past as either the Design Manual or Policy Procedure and Design Manual (PPDM). It is available in Adobe Acrobat format on the network at the following location: http://www.modot.mo.gov/business/manuals/projectdevelopment.htm

8.1.1.2 Bridge Survey

The Preliminary Design process starts with the receipt of the Bridge Survey. The Structural Resource Manager records the receipt date in his file and then passes the Bridge Survey on to the Bridge Survey Processor. The following is a list of steps that are taken by the Bridge Survey Processor.

Assign a Bridge Number to the Structure

Use the next number in the Bridge Index. Book 1 is for bridge numbers that start with an "A", while book 2 is for all other state bridge numbers. The "UIP" book is for off-system bridges. Anytime a bridge is rehabilitated or changed in any way, it will receive a new bridge number. For example, bridge no. A-1234 would become A12341 for the first rehab. And A12342 for the second rehab. Another example is that bridge no. L-123R would become L01232 for its next rehab. New timber bridges start with the letter "T" in book 2.

Enter the Bridge No. and other required information in the Bridge Survey Book.

Enter the Bridge No. in the Survey Received database – Microsoft Access (J:\Brhist\survrec.mdb) The password required to do this is available from the Office clerk.

Enter the Bridge No., survey received date and feature crossed in the Bloodhound 2000 database – Access

(T:\br-proj\bloodhound2000\bloodhound-2000.mdb).

Write Bridge No. on the plat and profile sheets as well as the cover letter from the district.

Create Job Folders

Check to see if a Correspondence File has been created. If the Correspondence File has been created, record the Bridge No. and make a Design Layout File for each structure received. If the Correspondence File has not been created, make a Correspondence File, an outer folder and a Design Layout File for each structure received. Here is the information for each type of folder/file:

Folder Type	Required Information on Folder
Outer (pink label)	County, Route and Job No.
Correspondence	County, Route and Job No.
Design Layout	County, Route, Bridge No., Location and Job No.

Also be sure to notify the Structural Resource Manager and appropriate Structural Project Manager (SPM) or Structural Liaison Engineer when a new Correspondence File is created. Include in your note Job No., County, Route, Bridge No. and the Bridge Division contact.

The Bridge Division contact is either the Structural Project Manager (SPM) or Structural Liaison Engineer.

Fill Out Bridge Survey Report (BR 105R)

If the district did not include a completed form BR 105R for the structure, complete one yourself T:\br-proj\A_prelim_ design\Br-Survey_Reports\). English and Metric versions are available. This form is not necessary on rehabs, overlays and retaining walls.

Send an acknowledgement letter to the district informing them that we received the Bridge Survey. Include the Bridge No. and the name of the Bridge Division contact. The next page shows an example cover letter.

MEMORANDUM

Missouri Department of Transportation
Bridge Division
Central Office

TO: *Name – District #*

FROM: *Name*
Senior Structural Technician

DATE: *Date*

SUBJECT: Bridge Survey Receipt
Job No. _____, Route ___, _____County

Receipt is acknowledged of the Bridge Survey sheets sent *date*, for the following proposed structure:

Bridge No. A____ Over _____

The Structural Project Manager assigned to this job is _____. Please contact *him/her* at your earliest convenience to discuss the work scheduling for the structural items on this job.

Initial

File location

Our mission is to provide a world-class transportation experience that delights our customers and promotes a prosperous Missouri.

Locate the Structure on the County Map

Pull out the map for the county this particular structure is in, circle the location and write the Bridge No. on the map (Bridges only, not walls and culverts).

Calculate Drainage Information

For structures over streams or waterways, calculate the drainage area, length of stream, 10% elevation, 85% elevation and slope from topographic maps. Record this information on Form BR 105R in the Design Layout folder. If the district's calculations indicate that the drainage area is less than 1.5 sq. miles, do not calculate the drainage area. The accuracy of the drainage area should be to the nearest 0.10 sq. mile for drainage areas less than 10 sq. miles and to the nearest 1.0 sq. mile for drainage areas greater than or equal to 10 sq. miles.

Process Electronic Files

If electronic files of the Bridge Survey plat and profile sheets were not included, contact the Transportation Project Manager (TPM) in the district or the Roadway Consultant to arrange for the files to be sent. Consult with the SPM or Bloodhound 2000 to determine who the district TPM is. When the electronic files are received, verify that the scale is 1"=10' and that the necessary reference files are included. The Bridge Survey Processor may have to work with the district to correct any errors. Save these files under the following directory –
T:\br-proj\A_prelim_design\district\job no.\bridge no..

Final Step for Bridge Survey Processor

Once all of these steps are completed, the Bridge Survey Processor should deliver the Correspondence File, outer folder and the Design Layout Folder to the Structural Resource Manager. The Structural Resource Manager will then pass the files to the SPM. The SPM then requests the Structural Resource Manager to assign a Preliminary Designer.

8.1.1.3 Beginning Preliminary Design

Once the Preliminary Designer is assigned to a structure, they should meet with the Structural Project Manager to go over the Correspondence and Layout files to see if anything out of the ordinary has come up at Core Team Meetings prior to that date. It is important that any correspondence or calculations used in the laying out of the structure should be included in the bound portion of the Layout Folder.

The Preliminary Designer should then examine the Bridge Survey closely for any errors or omissions. Consult Chapter V of the Project Development Manual (PDM). Pay special attention to the scales used. Make sure the district's submittal includes photographs and details of staging and/or bypasses (if applicable). Contact the district to resolve any discrepancies or questions. Look at the Bridge Survey cover letter to determine who the District Contact is.

A visit to the bridge site by the Preliminary Designer may be warranted to help determine Manning's "n" values, examine adjacent properties, etc. If you decide to make this trip, advise the Structural Project Manager and the District Contact since they may also want to attend.

8.1.2 Bridges/Boxes

8.1.2.1 End Slopes/Spill Fills

The end slopes are determined by the Construction and Materials Division and are supplied to the Bridge Division by way of the Preliminary Geotechnical Report. If this report is not in the Correspondence file, contact the District to get a copy of it. The Bridge Division has made a commitment to the districts that we will have the bridge plans, specials and estimate completed 12 months after the date the Bridge Survey and Preliminary Geotechnical Report are received. The "12 month clock" does not start ticking until both the Bridge Survey and the Preliminary Geotechnical Report are in the Bridge Division.

When laying out a skewed structure, adjust the end slope for the skew angle. On higher skews, this will have a significant effect on the lengths of the spans. Often the slope of the spill fills will be steeper than the roadway side slopes. On a skewed structure, this makes it necessary to "warp" the slopes. See Figure 4-09.1 in the Project Development Manual (PDM).

Whenever there will be a berm under any of the spans, its elevation should be such that there is a minimum of 4 feet clear between the ground line and the bottom of the girder as shown in Figure 8.1.2-1.

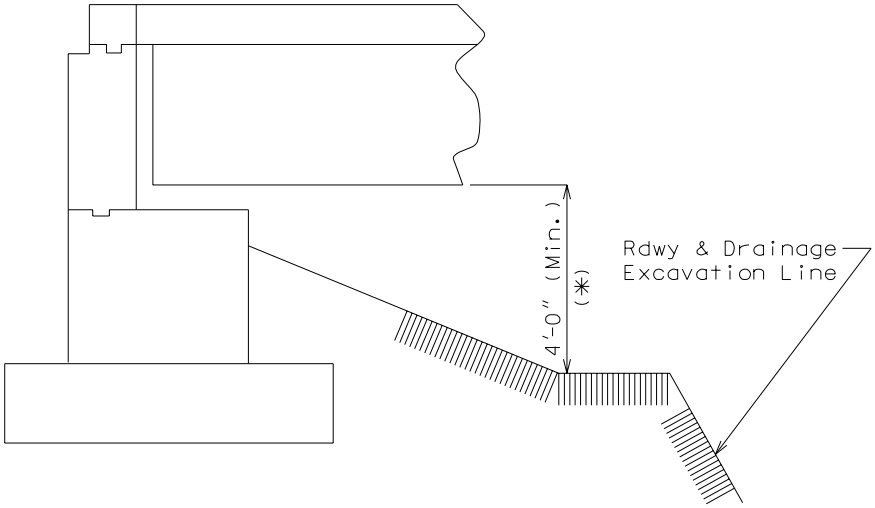

(*) Specify berm elevation or 4'-0" minimum clearance.

Figure 8.1.2-1 Berm Elevation

If a rock cut is encountered in the spill slope, a slope of 1:1 may be used to the top of the rock.

8.1.2.2 Wing Lengths

The lengths of the wings at the end bents is to be determined prior to the issuance of the Bridge Memorandum. There are two reasons for this. First, the district will use these lengths to determine the placement of their guardrail (bridge anchor section). Second, if the lengths of the wings exceed 22 feet, they will have to be broken into a stub wing and a detached wing wall. If this happens, then you will need to include this extra cost in your Preliminary Cost Estimate and request soundings for the wall. The request for soundings for the wall should include a request for the determination of the allowable bearing of the soil (if in cut - assume piling if it is in fill) and the angle of internal friction for the material retained by the detached wing wall. Also include the bottom of wing footing elevation.

On divided highway bridges with high skews and shallow end slopes, the wing lengths on the median side of the bridge may be less than the other side due to the difference in sideslope between the median and the outside.

8.1.2.3 Live Load Determination

The live load requirements for a structure shall be HL-93

On box culverts, the actual live load applied to the structure is dependent upon the amount of fill on top of the box; however, see Structural Project Manager for the live load that goes on the Bridge Memorandum.

8.1.2.4 Skew Angle

Determining the most appropriate skew angle for the structure involves some judgement. On bridges over streams, pick the angle that will allow floodwater to pass through the bridge opening with the least amount of interference from intermediate bent columns. Another consideration on meandering streams is to avoid a skew which will cause the spill fill – side slope transition from blocking the stream. Often a trip to the field may be justified just for determining the angle (you can even ask the district to stake some different skews for you to observe in the field).

On stream crossings, avoid skews between zero and five degrees and try to use five degree increments. On grade separations, often the skew must be accurate to the nearest second to maintain minimum horizontal clearances.

Keep all bents on a bridge parallel whenever possible and avoid skews over 55 degrees. Also keep in mind that the higher the skew, the higher the Preliminary Cost Estimate due to the beam caps and wings being longer.

8.1.2.5 Structure Type Selection

As the size of the creek/river increases, here is a rough approximation of structure type selection:

Box Culvert (single, double or triple)
Prestressed I-Girder (type 2, 3, 4 or 6)
Prestressed Bulb-Tee Girder (63.5” or 72.5")
Plate Girder

Sometimes a Solid Slab, Voided Slab, Prestressed Box Girders or Prestressed Voided Slab Beams bridge will need to be used instead of a Prestressed I-Girder due to limited vertical clearance or freeboard. Other times a Plate Girder or Wide Flange may need to be used instead of a Prestressed I-Girder for the same reason. Higher strength concrete girders may allow you to span further with shallower girders.

Higher strength concrete prestressed I-girders should also be considered as a means to save money by eliminating girder lines.

Prestressed concrete double-tee girders should be avoided if possible due to the redecking concerns for future maintenance.

On grade separations with high skews, you may want to consider using a 4 span bridge with integral end bents rather than a 2 span bridge with semi-deep abutments. This should be considered if the semi-deep slab length exceeds 30’.

On Prestressed I-Girder bridges, it is usually more cost effective to shorten the end spans of a 3 span Prestressed I-Girder bridge rather than having all spans the same length. The optimum span ratio is 1.1 to 1.0. For example, a span layout of (67’ - 76’ - 67’) is structurally more efficient than (70’-70’-70’).

8.1.2.6 Box Culverts

A general rule of thumb for whether or not a culvert may be used in place of a bridge is...
The most a culvert can handle is about 1,000 cfs per cell with 3 cells being the usual maximum. This can vary if the slope of the streambed is unusually flat or steep. Another rule of thumb is that the water from a drainage area of less than 5 square miles can usually be handled by a concrete box culvert.

Most districts prefer a box culvert to a bridge because of the lower maintenance costs; however, if a stream crossing is on the borderline between a box culvert and a bridge, each option should be explored and presented to the district. The presentation to the district should include the cost estimate for each option as well as a recommendation as to which option is preferred by the Bridge Division. Keep in mind that box culverts should be avoided on streams with medium to heavy drift, as shown on the Bridge Survey.

Hydraulics for some small box culverts are handled by the district. For drainage areas of 1,000 acres (approx. 1.5 sq. miles or 2.5 sq. kilometers) or less, the district will do the hydraulics (PDM 9-01.1 and 9-10.2 (4)). For drainage areas larger than this, the Bridge Division will do the hydraulics.

If you must curve or kink your concrete box culvert, try to limit each bend to 15 degrees. The FHWA publication HDS-5 “Hydraulic Design of Highway Culverts” recommends that you space these bends a minimum of 50 feet apart. If this is not practical, you will need to account for the head loss resulting from the sharper bend.

The Final Design of box culverts (structural calculations and contract plans preparation) will be done by the Bridge Division unless it is a single cell box culvert, in which case the plans are done by the district.

When sizing the proposed concrete box culvert, use the standard cell sizes whenever possible. Consult the most recent set of Missouri Standard Plans to determine the current standard cell sizes (section 703).

Locate the inside face of the headwalls of the culvert at or beyond the edge of the roadway clear zone. The edge of the clear zone can be found in the PDM (4-09.14); however, it is best to confirm this with the district because they may have gotten a design exception to use something less. If the headwalls cannot be placed beyond the clear zone, common in the situation of a very low fill, then guardrail will need to be attached to the top slab at least 10” from the headwall of the culvert.

Check the Preliminary Geotechnical Report for recommendations concerning the use of collars on longer box culverts. These are called for in the Preliminary Geotechnical Report when substantial differential settlement is expected.

Section 9-10.12 of the PDM addresses box culvert extensions. Do not allow the precast option on box culvert extensions or other "oddball" situations.

8.1.2.7 Girder Type Selection

Once you have determined that your structure will have girders, you must decide what types of girders to use. For checking your vertical clearance or freeboard, you will need to know the maximum span length of each type of girder. Page (LRFD DG Sec. 3.55.1.3) of the Bridge Manual should be used to help you determine this for Prestressed I-Girders while page (LRFD DG Sec. 3.43.1.2) should be used for Plate Girders. You will need to make adjustments if the span ratios get over 1.25.

Notify the District Contact as soon as you know that the profile grade will need to be raised to meet the minimum vertical clearance or freeboard requirements. If the district says the profile grade can't be raised, consider using more girder lines, using higher strength concrete if Prestressed I-Girders are being used, or switching to a voided slab bridge. As a last resort, request a Design Exception for the substandard item.

Prestressed I-Girder types 2, 3 and 4 cost roughly the same per foot ($100) and even the type 6 girders cost only slightly more ($130/ft.).

If you decide to go with a Prestressed Bulb-Tee Girder, try to limit the maximum span to 125'. We have gone as far as 133' but the strands had to be at 1-1/2" centers. Also keep in mind that these types of girders are very heavy and will often require two or three cranes to set them and may be difficult to transport to the site.

If you decide to use Plate Girders, then you have to decide if the girders should be painted or not. The use of weathering steel (ASTM A709 Grades 50W and HPS70W) is preferred due to the lower maintenance costs; however, there are situations where the use of weathering steel is not advisable. Here is a brief list of times when weathering steel should NOT be used (based on FHWA Technical Advisory T5140.22):

1.) If the distance from Ordinary High Water to low steel is less than 8' (or 3' between Des. High Water and low steel).
2.) If the bridge is located in either the St. Louis or Kansas City urban areas.
3.) If the bridge is over a road with an ADT greater than 10,000.
4.) If the bridge is over a road with an ADTT greater than 1,200.

If the vertical clearance is at least 25', the limitations of 2.), 3.) and 4.) do not apply.

If weathering steel cannot be used, the girders should be painted gray (Federal Standard #26373). If the district doesn't want gray, they can choose brown (Federal Standard #30045). If the district or the local municipality wants a color other than gray or brown, they must meet the requirements of PDM section 4-09.1 (5). System H paint should be used on weathering steel while System G should be used on all other steel plate girders.

8.1.2.8 Longer Bridges

For bridges that are longer than normal (more than 6 spans being a general rule of thumb), other items must be considered. If the feature you are crossing allows flexibility in bent placement, the most cost efficient span length is one that will result in the cost of one span's superstructure being equal to the cost of one bent. For example, calculate the cost of one intermediate bent, and then adjust the length of the span until the cost of the girders, slab and curb equal the cost of the bent. The use of higher strength concrete in Prestressed I-Girders can allow spans to be increased 16% to 21% as a means to eliminate intermediate bents.

Another item to consider is the placement of expansion devices. Page (LRFD DG Sec. 3.35.4.1-1) gives the maximum series lengths for both steel and concrete girders. Bridges close to or longer than these lengths should include expansion devices. These are guidelines only and should be reduced if you have short - stubby columns. Be sure to include the costs of the expansion devices and deadman anchors (if applicable) in your Preliminary Cost Estimate.

8.1.2.9 Staged Construction

If the new structure you are laying out replaces an existing structure, the exact details of the staging must be coordinated with the District Contact. If the new structure is on a new alignment, there is little cause for concern. However, if the new structure is on the same or slightly different alignment, the location of the bents for the new structure should be spaced to avoid the existing substructure units if at all possible.

Also, if the new structure is on the same or slightly different alignment, the question of traffic handling will need to be addressed. If the district wants to use a temporary bypass, then you need to determine if the district can size some drainage-diversion pipes for the bypass. If the district decides pipes cannot be used, then a temporary bridge is necessary. A separate Bridge Survey/Memo/Bridge No. is required.

If the district does not want to use a temporary bypass, and they want to maintain traffic on the existing bridge while the new one is constructed, then the new structure will have to be staged. One important item to verify in this situation is that the new girders will clear the existing substructure. Another item to consider in setting up the staging is the temporary barrier curb and required minimum horizontal distance from the edge of the deck based on whether the temporary barrier curb is attached to the slab. Refer to the following page.

8.1.2.9-1.1 Temporary Barriers

Bridge Plans must include reference to Temporary Barrier attachment if required. Coordination required with Design.

a. No attachment (Sufficient distance available to accommodate lateral deflection of barriers)

b. Tie down strap system. (Refer to Standard Drawing 617.20B) Coordinate with Design to provide minimum of 4 temporary barrier Sections on approach slab roadway.

c. Bolt through deck system (To be used only on existing decks, with sufficient strength, that will be removed.) (Refer to Standard Drawing 617.20B) Coordinate with Design for required transition barrier attachments

Lateral deflection requirements due to traffic impact on barriers must be considered if a project requires the use of Temporary Barriers. When the Temporary Barrier is used in a free standing mode immediately adjacent to the edge of a bridge deck, the distance from the edge of the bridge slab to the center of gravity of the barrier shall be 45.3 inches minimum. 45.3 inches minimum shall be used where vertical displacement of traffic at edge of pavement is a safety issue.

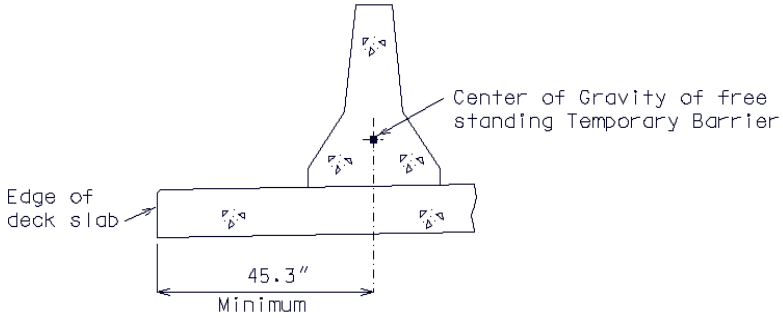

For all other applications of a free standing Temporary Barrier, the design lateral deflection of the barrier shall be 24 inches minimum.

Regardless of deflection distance available, if the bridge deck is super elevated or has a large roadway slope, a free standing Temporary Barrier should not be used because the barrier has the potential for movement due to gravity forces on the barrier.

When the Temporary Barrier is adequately attached to the bridge deck (Refer to Standard Drawing 617.20B) minimum distance of 6 inches shall exist from the edge of the bridge slab to the face of the barrier.

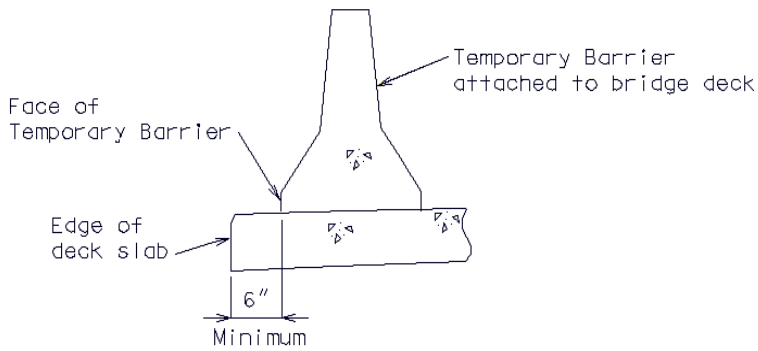

8.1.2.10 Earthquake Consideration

If the structure you are laying out falls in seismic performance category B, C or D, there are a few items to keep in mind. Box culverts are preferable to bridges on stream crossings because they are exempt from seismic design. Pile cap intermediate bents are preferable to open column bents on footings because footings can grow quite large due to seismic forces. Minimize the number of expansion joints in the deck because each of these locations may require earthquake restrainers which are very costly. Make the superstructure as light as possible, which usually means use steel plate girders or wide flanges instead of prestressed concrete girders where ever possible. For shorter spans, voided and solid slab bridges perform well.

8.1.2.11 Replacing an Existing Structure

If you are replacing an existing structure with a new one, you may have to calculate a cost estimate for rehabilitating the old bridge. The sufficiency rating, which can be found on the SI&A form (Structure, Inventory & Appraisal), will determine your course of action:

Sufficiency Rating (SR)	Status	Comment
SR < 50	Deficient	Qualifies for full federal bridge replacement funds.
50 < SR < 80	Deficient	Qualifies for partial fed. bridge replacement funds.
80 < SR < 100	Not Deficient	Federal bridge replacement funds can not be used; however, other federal funds could possibly be used.

If the sufficiency rating is greater than 50 but less than 80, then a cost analysis will need to be included in the layout folder showing that it is more cost effective to replace the bridge than it is to rehab/widen it. If rehab/widen is more cost effective, you may still replace the bridge; however, federal bridge replacement funds will be capped at 80% of the rehab/widen cost estimate. See the FHWA letter on pages 2.11-4 through 2.11-6 for a more detailed explanation. The SI&A form can be requested from a Bridge Inventory Analyst in the Rating Section. Include a copy of this form in the Layout Folder.

An interstate job (job no. with an “I” in it) is an example of using federal funds to replace a bridge without worrying about the sufficiency rating of the existing bridge. The reason this is acceptable is because you are using federal “interstate” funds, not federal “bridge replacement” funds.

An example of an SIA form can be seen on the next page, followed by a letter form FHWA explaining guidelines for use of federal bridge replacement money.

Missouri Department of Transportation
Bridge Inventory and Inspection System
Structural Inventory & Appraisal sheet

January 26, 2005
1:33:48pm

COUNTY : PIKE	BRIDGE NO. A3497	REVIEW STATUS :	APPROVED	NBI STATUS :	P
RECORD TYPE :	ROUTE CARRIED 'ON' STRUCT	RUN DATE :	3/2/2004	SUBMITTAL YEAR :	2003

GENERAL STRUCTURE INFORMATION

1	State	MISSOURI
2	District	03
3	County	PIKE
8	Federal ID No.	2931
27	Year Built	1996
106	Year Reconstructed	0
42A	Type of Service On	HIGHWAY
21	Structure Maintenance	STATE HIGHWAY AGENCY
22	Structure Owner	STATE HIGHWAY AGENCY
33	Br. Median Code	NO MEDIAN
37	Historical Significance	NOT ELIGIBLE FOR NR OF HP
101	Parallel Struc Desg	LEFT
103	Temporary Structure	NOT TEMPORARY
112	NBIS Bridge Length	YES

ROUTE DESIGNATION INFORMATION

5A	Record Type	ROUTE CARRIED 'ON' STRUCT
5B	Route Signing Prefix	US
5C	Designated Level of Service	MAINLINE
5D	Route Number	00061
5E	Directional Suffix	NOT APPLICABLE
7	Facility Carried	US 61 S
12	Base Hwy. Network	YES
13A	LRS Inventory Route No.	0000000011
13B	Subroute No.	00
20	Toll Status	ON FREE ROAD
26	Functional Classification	02-RU PRINCPL ARTRIAL-OTH
28A	Lanes on Structure	02
100	STRAHNET Designation	RTE NOT A DEFENSE HWY
104	National Highway System	ON NHS
105	Federal Lands Highway	NOT APPLICABLE
110	Designated Nat. Network	YES

STRUCTURE LOCATION INFORMATION

4	Place	CUIVRE
	Code	17704
9	Location	S 24 T 53 N R 3 W
11	Milepoint	56.18 miles
16	Latitude	39 D 21 M 24 S
17	Longitude	91 D 11 M 54 S

STRUCTURE TRAFFIC INFORMATION

29	AADT	1547
30	AADT Year	2002
102	Direction of Traffic	1-WAY TRAFFIC
109	AADT Truck Percent	16%
114	Future AADT	2939
115	Future AADT Year	2024

UNDERRECORD INFORMATION

6	Features Intersected	CRD OLD US 54
42B	Type of Service Under	HIGHWAY
28B	Lanes Under Structure	02
54A	Vert. Clearance Ref.	HIGHWAY
54B	Vert. Clearance	27 Ft. 5 In.
55A	Rt. Lat Clear Ref.	HIGHWAY
55B	Rt. Lat Clearance	21 Ft. 7 In.
56	Left Lat Clearance	0 Ft. 0 In.
38	Navigation Control	N/A
39	Nav Vertical Clear	0 Ft. 0 In.
40	Nav Horizontal Clear	0 Ft. 0 In.
111	Nav. Pier Protection	
116	Nav. Cl. Vert. Clear	

STRUCTURE GEOMETRIC INFORMATION

10	Inventory Rte. Vert. Clear	99 Ft. 99 In.
19	By pass Detour Length	3.10 miles
32	Approach Roadway Width	40 Ft. 0 In.
34	Skew	7.00 Degrees
35	Struct. Flared	NO
47	Total Horiz. Clear	46 Ft. 10 In.
48	Maximum Span Length	74 Ft. 5 In.
49	Structure Length	223 Ft. 0 In.
50A	Left Curb/Sidewalk Width	0 Ft. 7 In.
50B	Right Curb/Sidewalk Width	0 Ft. 7 In.
51	Curb to Curb Br. Width	46 Ft. 10 In.
52	Deck Width (Out-Out)	49 Ft. 6 In.
53	Vert.Clearance Over Deck	99 Ft. 99 In.

Page: 1

MoDOT

Missouri Department of Transportation
Bridge Inventory and Inspection System
Structural Inventory & Appraisal sheet

January 26, 2005
1:33:48pm

COUNTY : PIKE	BRIDGE NO. A3497	REVIEW STATUS : APPROVED	NBI STATUS : P
RECORD TYPE :	ROUTE CARRIED 'ON' STRUCT	RUN DATE : 3/2/2004	SUBMITTAL YEAR : 2003

LOAD RATING AND POSTING INFORMATION

31	Design Load	HS 25
41	Structure Status	A - OPEN NO RESTRICTIONS
63	Oper. Rating Meth.	LOAD FACTOR
64	Operating Rating	95 Tons.
65	Inventory Rating Meth.	LOAD FACTOR
66	Inventory Rating	57 Tons.
70	Bridge Posting Code	=>LEGAL LOADS

PROPOSED IMPROVEMENT INFORMATION

	Sufficiency Rating	99.4 Percent
	Deficiency Rating	NOT DEFICIENT
	Funding Eligibility	
75A	Proposed Work	
75B	Work Done By	
76	New Struc Length	0 Ft. 0 In.
94	Struc Improve Cost	$ 0,000
95	Roadway Improve Cost	$ 0,000
96	Total Project Cost	$ 0,000
97	Year of Cost Estimates	0

APPRAISAL RATING INFORMATION

36A	Br. Rail App. Rating	MEETS ACCEPTBLE STND
36B	Transition Rail App. Rating	MEETS ACCEPTBLE STND
36C	Approach Rail App. Rating	MEETS ACCEPTBLE STND
36D	Rail End Treat. App. Rating	MEETS ACCEPTBLE STND
67	Struc Eval App. Rating	9
68	Deck Geometry App. Rating	9
69	Underclearance App. Rating	9
71	Waterway Adeq. App. Rating	N
72	Approach Road App. Rating	8
113	Scour Assess App. Rating	N

MATERIAL/CONSTRUCTION INFORMATION

43A	Main Struc. Mat type	PRESTRSED CONCRETE CONTIN
43B	Main struc Constr. Type	STRINGER/MULTIBEAM - GRD
45	# of Main Spans	3
44A	Appr Struc. Mat type	
44B	Appr Struc. Cnstr. type	
46	# of Approach Spans	0
107	Deck Mat/Constr.	2 CONCRETE PRECAST
108A	Wear Surf Mat/Constr.	1 MONO CONCRETE
108B	Membrane Mat/Constr.	0 NONE
108C	Deck Protect Mat/Constr.	1 EPOXY

CONDITION RATING INFORMATION

58	Deck Cond. Rating	9
59	Superstructure Cond. Rating	9
60	Substructure Cond. Rating	9
61	Channel /Channel Protection Cond. Rating	N
62	Culvert Cond. Rating	N

INSPECTION INFORMATION

90	Gen. Insp Date	10 / 02	
91	Gen. Insp. Frequency	24	Months
92A	Frac. Critical Insp. Date	N	Months
93A	Frac. Critical Insp. Date		
92B	Underwater Inspection	N	Months
93B	Underwater Insp. Date		
92C	Special Inspection	N	Months
93C	Special Inspection Date		

BORDER BRIDGE INFORMATION

98	Neighboring State Code
98B	Neighboring State % Respon
99	Neighboring State Struc. No.

APPROVED POSTING INFORMATION

Approved Posting Category S-1

Ton1 Ton2 Ton3

Tonnage Values for Posting Sign

General Text for Posting Sign

NO POSTING REQUIRED

FIELD POSTING INFORMATION

Field Posting Category S-1

Ton1 Ton2 Ton3

Tonnage Values for Posting Sign

General Text for Posting Sign

NO POSTING REQUIRED

Page: 2

U.S. Department of Transportation
Federal Highway Administration

Region 7
Iowa, Kansas
Missouri, Nebraska

P. O. Box 1787
Jefferson City, Missouri 65102

February 25, 1993

DESIGN / BRIDGE
Highway Bridge Replacement and
Rehabilitation Program (HBRRP)
Proper Use of Funds

Mr. Wayne Muri, Chief Engineer
Missouri Highway and Transportation Department
Jefferson City, Missouri

Dear Mr. Muri:

We have received several PS&E's recently that have had estimates indicating improper usage of HBRRP funds. Since this was not an isolated case, we feel it is necessary to again explain the criteria for use of these funds.

The following steps outline the eligibility determination for use of HBRRP funds for bridge replacement or rehabilitation:

1. In order to qualify for HBRRP funds, the existing bridge must be on the list of eligible bridges. This list is compiled by our Washington Office each year and is based on the bridge inventory data submitted by the State. A copy of the updated list of bridges is provided to the State each year.

2. In order to qualify for the eligibility list, the existing bridge must ***first*** be deficient. A deficient bridge is either structurally deficient or functionally obsolete. These are defined as follows:

   To be ***structurally deficient*** (SD) the bridge must have:

   a. a condition rating of 4 or less for:
      Item 58, deck; or
      Item 59, superstructure; or
      Item 60, substructure; or
      Item 62, culverts; ***or***

☐ CHIEF ENGR
☒ BRIDGE
☐ CONST
☒ DESIGN
☐ FISCAL
☐ IRAS
☐ LEGAL
M & T
M & R
☐ PLANNING
☐ R/W
☐ TRANSP
☐ _____

b. an appraisal rating of 2 or less for:
Item 67, structural condition; or
Item 71, waterway adequacy.

To be ***functionally obsolete*** (FO) the bridge must have:

a. an appraisal rating of 3 or less for:
Item 68, deck geometry; or
Item 69, underclearances; or
Item 72, approach roadway alignment; ***or***

b. an appraisal rating of 3 for:
Item 67, structural condition; or
Item 71, waterway adequacy.

Any bridge classified as structurally deficient is excluded from the functionally obsolete category.

3. After the deficiency status of a bridge is established, a check is made to determine whether any construction or reconstruction of the bridge occurred in the past ten years. If either Item 27, Year Built, or Item 106, Year Reconstructed, indicate a date within the past ten years, the bridge is not eligible for HBRRP funding.

3. After the eligibility of the bridge is established, the sufficiency rating (SR) of the bridge is used to determine whether it is eligible for replacement or rehabilitation. To be ***eligible for replacement, the SR must be less than 50***, and to be ***eligible for rehabilitation the SR must be 80 or less***. The SR is only used to determine eligibility, it should not be used to dictate what the appropriate corrective strategy is for a particular structure. This should be done with cost analyses that account for the potential life of the bridge under each alternative. A bridge with a SR between 50 and 80 could qualify for replacement, if it is documented that replacement is more cost-effective than rehabilitation. Likewise, replacement is not always the appropriate strategy for a bridge with a SR less than 50.

4. Once the eligibility and appropriate strategy are determined, the scope of work must address the deficiencies of the bridge. When the proposed work does not bring the deficiencies up to current standards, the bridge work is not eligible for HBRRP funds. State standards approved by FHWA are to be used for National Highway System (NHS) projects. For non-NHS projects, State standards are to be used. A bridge that is deficient due to its narrow roadway width is not eligible for HBRRP funding unless the project widens the bridge to current standards. Providing only an overlay of the bridge deck would not qualify for HBRRP funding, because it does not address the deficiency.

The Intermodal Surface Transportation Efficiency Act (ISTEA) did make an exception to this requirement for painting, seismic retrofitting, and calcium magnesium acetate application. HBRRP funds may be used for each of these three items of work on a deficient bridge without addressing the deficiencies of the bridge. For example, a narrow bridge could be painted with HBRRP funds without widening the bridge as part of the project.

The above criteria should be used for bridges on and off the NHS. For non-NHS projects, which are now exempt from Federal Highway Administration oversight, the State is responsible for monitoring the proper use of HBRRP funds. This information should be provided to those individuals responsible for project development and for preparation of estimates.

If there are any questions on the eligibility policy for HBRRP funds, please let us know.

Sincerely yours,

Gerald J. Reihsen, P.E.
for Division Administrator

8.1.2.12 Temporary Bridges

If the district will be using a bypass on stream crossings, a temporary bridge may be necessary. The district should first consider using large drainage-diversion pipes to carry the water under the bypass, if the district determines this is not practical, they should submit a Bridge Survey for a temporary bridge on the bypass. Check with the Structural Project Manager for hydraulic design frequency.

Once the number of 40' spans has been determined, the district should be contacted so they can locate the pieces necessary for the construction of the bridge. Make sure the pieces the district intends to use have the "new" beam caps that take 14" H-pile. The district should provide you with the location of where the pieces are coming from and where they should be taken by the contractor at the end of the project. If the district is unable to find the pieces, then they will need to be contractor furnished. This has a big impact on costs. (See subsection 2.15, Preliminary Cost Estimate.)

8.1.2.13 Bridges Over Railroads

Consult the AREA (American Railway Engineers Associations) Manuals located in the Development Section for more detailed information. Here are some basic points to keep in mind:

- Railroads often raise their tracks so provide some cushion in your vertical clearance.
- Will the railroad want room for an extra track or maintenance roadway?
- Keep the ballast free drained.
- Drainage needs to be designed for 100 year storm.
- Slope protection shall consist of 1'-0" thick rock blanket (Type 2) placed on top of permanent erosion control geotextile. Some railroads may require changes to this; however, this will be determined on a "case-by-case" basis.
- Some railroads also now require the barrier curbs and slab overhangs to be designed to accommodate fences that may be added in the future.

If the face of the columns of an intermediate bent falls within 25 feet of the centerline of the railroad track, a collision wall is required. The elevation for the top of the collision wall is set at 6 feet above top of rail.

The Railroad Liaison in the Multimodal Operations Division is a very good resource for answering questions at any stage of the layout. It typically takes a very long time to receive approval of a layout from the railroad. The Railroad has to approve both the Preliminary Design and the Final Plans!

When making a submittal to the Railroad Liaison for approval of the Preliminary Design, include two sets of full-sized and two sets of half-sized plat and profile sheets, as well as a copy of the Design Layout Sheet. The next page contains an example cover letter.

MEMORANDUM

Missouri Department of Transportation
Bridge Division
Central Office

TO: *Name-District #*

CC: *Name*

FROM: *Name*
Structural Project Manager

DATE: *Date*

SUBJECT: Bridge No. _____, Rte. _ (____) Over _____-
Job No. _____, Route _____, _____County

Please find enclosed three sets of half-sized prints of the plat and profile sheets, as well as a copy of the Design Layout sheet for the above referenced bridge.

We request that you submit this information to the railroad for their preliminary approval such that we may proceed to the final design phase. This project is currently in the _____ letting.

If you have any questions or comments, please do not hesitate to call me at (573) _____-

Initials

Enclosure

File location

Our mission is to provide a world-class transportation experience that delights our customers and promotes a prosperous Missouri.

8.1.2.14 Historical Bridge Considerations

You also need to check with the Historical Bridge Coordinator in the Design Division when replacing a bridge. There is not a magic age for a bridge for it to become "historical". Age does not matter. All "Bridge Resources" that will be impacted by MoDOT need to be cleared through the Department of Natural Resources (DNR) Historic Preservation Program (HPP) before they can be replaced, demolished, extensively rehabilitated or deeded to a new owner (county, city, etc.). The following is a definition of "Bridge Resources":

> "Bridge Resources are both public and privately owned highway, railroad and pedestrian bridges, viaducts and culverts. This does not include metal and plastic pipes, unless they are encased in an older concrete, stone or brick structure."

The following is the information on this topic supplied to the district (FYI):

> "Bridge Resources on any given job or location study need to be checked out and cleared just like historic buildings (architecture) and archaeological sites. Standard size color photographs can be submitted to the Historic Bridge Coordinator directly and/or attached to the Request for Environmental Assessment (RES) or Questionnaire to Determine Need for Cultural Resources Assessment. The Historic Bridge Coordinator will then determine and execute procedures for clearance, if required."

Bridges that are older than 50 years stand a better chance of being evaluated as eligible for the National Register of Historic Places (NRHP) in Clayton Fraser's 1996 draft *Missouri Historic Bridge Inventory*. This is a study that was undertaken under STURAA (Surface Transportation and Uniform Relocation Assistance Act of 1987) in order to inventory all potentially NRHP eligible historic bridges in the state. Any of these that are determined NRHP eligible by the HPP will require special mitigation (or avoidance) if they are to be affected by project activities. For this reason, it is important that all bridge resources be identified early in the process.

Usually, bridge resources do not stand in the way of right of way acquisition (A-dates) because they are generally located on roadways that the state already owns; however, there are cases in which bridge resources are privately owned and located on private property. In these rare cases, bridge resources would need to be checked out prior to our right of way acquisition approval.

8.1.2.15 Preliminary Cost Estimate

The Preliminary Cost Estimate should be neat, legible and dated since a copy of it is included with the Bridge Memo.

The accepted method of calculating the Preliminary Cost Estimate is to actually calculate some approximate quantities for the bridge and then multiply them by the unit prices supplied by the Review Section. A spreadsheet should be used to calculate these quantities. To estimate the pounds of reinforcing steel in a structure, multiply the number of cubic yards of concrete in the structure by 125 (135 on boxes).

The Preliminary Cost Estimate,should be increased for the following items: (PDM Fig. 1-02.1) (do not compound the increases and use your judgment).

Item	% Increase
Staged Construction	10
Horizontally Curved	5
Seismic Performance Cat. B	10 *
Seismic Performance Cat. C	25 *
Seismic Performance Cat. D	40 *
Tight Site/Limited Access	3

* These factors assume estimated quantities have not been increased due to seismic forces.

Here are some guidelines for estimating the cost of the removal of existing bridges:

Type of Bridge Removal	Cost per Square Foot
Simple Structures Over Streams	$ 5
Girder Structures Over Roads	$ 7
Conc. Slab Structures Over Interstates (quick opening of lanes to traffic)	$25

After you calculate the Preliminary Cost Estimate, divide it by the area of the deck and compare the price per sq. ft. to this table:

The average costs vary. Usually they fall within these ranges.

Type of Bridge	Avg. Price/Sq. Ft. of Deck
Prestressed I-Girder	$50 - $70
Prestressed Bulb-Tee	$60 - $80
Plate Girder	$65 - $90
Voided/Solid Slab	$80 - $95
Temp. Bridge(state furn.)	$40 - $45
Temp. Bridge(cont. furn.)	$100 - $125
Major Lake Crossing	$150 - $175
Major River Crossing	$175 - $200

The cost estimate spreadsheet should be stored at T:\br-proj\current estimates after being reviewed by the Structural Project Manager.

8.1.2.16 Bridge Memorandums (Memos)

The Bridge Memo is the document sent to the District that tells them where we plan to put the bridge, what kind of structure it will be, the Preliminary Cost Estimate and any other pertinent information. Examples are on pages 2.16-5 through 2.16-7. More information is required on more complicated structures. If you are not sure if the District needs to have a certain piece of information concerning the structure, include it on the Bridge Memo to be safe. Too much information is better than too little.

Here is a sample listing of what to include on the Bridge Memorandum:

1.) Identify type of structure, span lengths, skew, loading, roadway width, wing lengths and special end fill considerations. For curved structures, specify how the design span lengths are to be measured i.e., "measured along the CL of Roadway".
2.) Indicate all pertinent profile grade, alignment and superelevation transition information.
3.) Identify the fill exception stations or ends of the bridge. The district uses this to coordinate the bridge with their roadway design features such as guardrail. On PSI-Girder bridges take into account the information found on page 3.1-3 of Sec. 3.55 when calculating these stations.
4.) Identify slopes at end bents.
5.) Indicate elevation of any berms to be constructed at the end bents.
6.) If applicable, call for old roadway fill to be removed to natural ground line.
7.) For box culverts, indicate the location of the headwalls and the type of wings to be provided (flared or straight). Also include the upper and lower flow line elevations along the CL of the box.
8.) Identify any bridge related items that the district will need to address in their plans or special provisions as a "Roadway Item".
9.) Include the cost estimate for construction (Preliminary Cost Estimate). Include supporting calculations with the Bridge Memo packet sent to the district.
10.) Include the method of traffic handling while construction is underway. Attach sketches for staged construction when appropriate.
11.) For stream crossings, show all pertinent hydrologic data used for the layout of the structure:
    - Drainage Area and Terrain Description
    - Design Frequency
    - Design Discharge
    - Velocity thru Bridge Opening
    - Design High Water Elevation
    - Estimated Backwater
    - Overtopping Frequency
12.) For grade separations, include all minimum vertical and horizontal clearances (final and construction).
13.) Quite often, the district will add items to a bridge late in the final design process because they "didn't think of them" earlier. This often causes extra work due to the necessary redesigns. Include a statement similar to the following to reduce this occurrence:

"No conduit, lighting, utility supports or sidewalks are to be included in the final plans for this bridge."

If the district has already indicated that they want special items attached to the bridge, include the specifics on the Bridge Memorandum and modify the above note.

14.) The design year ADT (average daily traffic) and ADTT (average daily truck traffic). Request this from the district if it is not shown on the plat sheet. On grade separations, get the ADT and ADTT for both roads.

15.) For box culverts, include the following notes:

"Provide grading of the channel bottom with the R/W limits as needed for culvert flowline elevations and transition of the channel bed to the culvert openings. Taper channel banks to match the ends of the culvert opening as required (Roadway Item)."

"Roadway width is _____ from outside of shoulder to outside of shoulder. The __ :1 roadway sideslopes are to be 'rolled up and over' the culvert to provide minimum cover on the barrel (see road plans)."

(Use this note when the headwalls are placed to satisfy clear zone requirements and/or when the fill height on top of the culvert is very shallow resulting in a flatter sideslope than that indicated on the roadway typical section).

16.) Also for box culverts, state if guardrail (Roadway Item) is to be provided in lieu of meeting the clear zone requirements. If there will be guardrail over the box culvert and the fill height is less than 2 feet, indicate that attachment of the guardrail to the top slab will be handled in the bridge plans, even though the guardrail itself is a roadway item.

Once the Preliminary Designer has the Bridge Memo completed, they should submit it to the Structural Project Manager for their review. The SPM will then request a Bridge Memo Conference with the Senior Technical Support Engineer and the Structural Resource Manager. After this review and/or conference, the Preliminary Designer will then proceed with preparing the Bridge Memo package for delivery to the district.

The Bridge Memo should be signed and dated the day you send it out. You should include spaces for two signatures from the District. When you send the Bridge Memo, you need to send three copies; one on blue paper and two on white paper. Your original signature should appear on each of these three copies.

The cover letter accompanying the Bridge Memo should be addressed to the Transportation Project Manager. A cover letter is more desirable than a Letter of Transmittal. The packet sent to the district should include a minimum of the following:

3 Copies of the Bridge Memo (1 blue, 2 white)

1 Copy of the Calculations used for the Preliminary Cost Estimate

1 Copy of the Constructability Questionnaire

1 Copy of the Layout for Soundings

An example of the Constructability Questionnaire can be found on page 2.16-8, but you may add, delete or modify the questions to suit the structure.

Once the signed Bridge Memo is received from the District, one copy should be sent to the State Design Engineer. Once again it is preferable for a cover letter to be used for this instead of a Letter of Transmittal. The reason for this is that as of December of 1998, you need to include information pertaining to floodplains in this cover letter. Specifically you need to state whether or not the bridge is in a Floodway or Zone A or other designation. You should also include a statement stating that a Floodplain Development Permit is/is not required and that the Bridge Division will request such a permit if necessary. Example of this letter can be found on page 2.16-10.

The original blue Bridge Memo should be placed in the Layout folder upon its return from the district.

MEMORANDUM

Missouri Department of Transportation
Bridge Division
Central Office

TO: *Name-District #*

FROM: *Name*
Senior Engineer, Location and Layout

DATE: *Date*

SUBJECT: Bridge No. A____ over _____
Job No. _____, Route____, _____County

Attached for your review are the original and two copies of the Bridge Memorandum for the above noted structure. If you agree with the information shown, please sign and return the original and one signed copy of the memorandum to the Bridge Division. If any modifications have been made to the plat and profile sheets submitted in your original Bridge Survey, please resubmit these drawings by electronic and hard copy means at the same time as your return of the signed memorandum.

Also attached is a copy of the calculations we used to determine the Preliminary Cost Estimate for this structure and a copy of the Layout for Soundings sent to the Materials Division.

In addition, please complete and return the attached Constructability Questionnaire. Your detailed response will aid us in addressing the issue of constructability and any additional costs associated with the structure.

If you have any questions or comments, please do not hesitate to call me at (573)_____.

Initials

Attachments

File location

Our mission is to provide a world-class transportation experience that delights our customers and promotes a prosperous Missouri.

Bridge Memorandum

Job No: JXXXXXX **Bridge No: XXXX**
XXXXXX County **Rte. XX over XXXXXX**

Final Layout: (60 ft. – 75 ft. – 60 ft.) P/S Concrete I-Girders with 15 ft. wings

Roadway Width: 40 ft. plus 16 in. Safety Barrier Curbs

Alignment: Curve SP1 P.I. Sta. 828+27.40 SC Sta. 823+50.16 CS Sta. 832+65.06
Delta 3° 30' 00.0" (LT) R 1637.02 ft. S.E. 5.8 ft/ft

Skew: 0 degrees to a radial line at Sta. 823+67.67 CL Rte. 15
All bents parallel.

Loading: HL-93

Profile Grade: 0.00 % ahead from Sta. 823+00.00 (Elev. 745.00) across structure

Tie Station: Fillface Bent No. 1 = Sta. 823+67.67 CL Rte. 15

Fill Exception: Sta. 823+67.67 to Sta. 825+65.17+/-

Traffic Handling: Use existing bridge H-550 during construction.

Existing Bridge: Remove existing bridge H-550 per standard specifications, cost $18,500 (Bridge Item).

General Notes:
Profile Grade and Stationing is located @ CL Route 15.
End fills shall be 2.5:1 normal to end bents (Rdwy. Item)
Provide 2 ft. thick rock blanket from toe of end slopes to Elev. 728.35 (Rdwy. Item).
Extend rock blanket from toe of slope toward channel 20 ft. (Rdwy. Item).
Use Geotextile material under rock blanket to accommodate slab drains (Rdwy. Item).
Provide Bridge Approach Slabs (Bridge Item).
Provide right-of-way as required for construction.
Remove existing fillslopes to natural ground line within new bridge limits (Rdwy. Item).
An NFIP Flood Study (Panel 295267 0003 B, February 16, 1983) shows this construction site in a "Zone A2" floodway area subject to 100-year flooding: therefore, a floodplain development permit and a no-rise certificate will be needed. (Bridge Engineering Unit will obtain).

Hydrologic Data:
D.A. = 51.0 sq. mi. (Rolling)
Design Frequency = 100 yrs.
Q(100) = 10,439 cfs
D.H.W. = 735.9
Est. Backwater = 0.79 ft.

Overtopping Flood Data:
Q(500) = 13,872 cfs
Q(OT) = 11,800 cfs.
Overtopping Frequency ~ 258 yrs.

Bridge _____ Date _____
Name

New Bridge: **$xxxxxxxxx**
Bridge Removal: **$xxxxxxxx**
Total Estimate: **$xxxxxxxxx**

District _____ Date _____

District _____ Date _____

Bridge Memorandum

Job No: JXXXXX **Bridge No: AXXXX**
XXXXXX County **Route XXXXX Over XXXXXXXX**

Final Layout: 3 (11' x 10') Concrete Box Culvert with Straight Wings
Roadway Width: 30' out-to-out of shoulders
Alignment: Tangent
Skew: square
Loading: HS20-44
Profile Grade: VPI Sta. 237+49.00 (Elev. 883.26), –0.27% Back across structure
Tie Station: CL Box Culvert = Sta. 237+82.95 CL Rte. D
Flowline Elevations: Upper Flowline Elev. = 870.40
Lower Flowline Elev. = 869.94
Flowline elevations are located at the CL of the box culvert.
Traffic Handling: Road closed
Existing Bridge: Remove existing bridge G-401 per Standard Specifications, Cost $XXXX (Bridge Item).
Channel Cleanout: Provide grading of the channel bottom within the limits of the R/W as needed for culvert flowline elevations and transition of the channel bed to the culvert opening. Taper channel banks to match end of culvert opening as required. (Roadway Item).

General Notes:

Profile Grade and Stationing is located @ CL Rte. D.

Provide right-of-way as required for construction.

Relocate all utilities as required for construction.

Use 4:1 sideslope from the outside shoulder for a distance of 3' and then use 3:1 sideslope down to headwalls. Upstream headwall shall be offset approximately 20.3' LT from CL Rte. along CL Box. Downstream headwall shall be offset approximately 21.0' RT from CL Rte. D along CL Box.

Hydrologic Data:

Drainage Area = 3.4 sq. mi.
Design Frequency = 100 years
Design Discharge = 2,700 cfs
Design High Water Elevation = 881.11
Estimated Backwater = 1.51 ft.
Overtopping Frequency ~ 200 years
100 year culvert outlet velocity = 8.18 fps
500 year culvert outlet velocity = 6.62 fps
Streambed and embankment protection to be determined by District (Roadway Item)

This structure is not in an NFIP regulated floodway.

Note: A design exception will be initiated by Bridge Unit for the 1.51' of backwater. The design exception for the roadway width will be initiated by the District.

Estimated Construction Cost	**$XXXX**
Bridge Removal	**XXXX**
	$XXXX

Bridge _____ Date _____
Name

District _____ Date _____

District _____ Date _____

J:\MCEUED\J1S0573\A7070bm.doc

Constructability Questionnaire

County: Howell
Job No: J9P0363B

Route: 60 (EBL) Over Burnham RD & BNSF Railway
Bridge No: A6176

Please obtain answers to the following questions from the most knowledgeable source available in the district. Your detailed response will aid the Bridge Division in addressing the issue of constructability and any additional costs associated with the proposed bridge.

1. Are any problems anticipated transporting girders of the proposed length to the construction site?

2. Is there an adequate staging area available at the construction site for use in erecting girders of the proposed length?

3. Are there any existing features near the location of the proposed bridge supports which could interfere with constructing the bridge foundation or driving piling?

4. Is the project sequenced so that construction of the bridge will not destroy recently built facilities?

5. Are there any additional concerns regarding the construction of the proposed bridge which need to be addressed?

Please provide the name and phone number of the person who was the source for the answer to these questions in case we need to contact them later.

MEMORANDUM
Missouri Department ofTransportation
Bridge Division
Central Office

TO: Diane Heckemeyer-de

CC/ATT: Dean Franke-br
Dennis Heckman-br

FROM: *Name*
Senior Engineer, Location & Layout

DATE: *Date*

SUBJECT: Job No. _____
_____ County
Route _____
Bridge No. A_____
Bridge Memorandum

Attached for your records is one signed copy of the Bridge Memorandum for the above referenced structure. A Floodplain Development Permit will be required for this structure. We will forward a copy of the approved permit to your office upon its receipt.

If you have any questions or comments, please do not hesitate to call me at (573)_____.

Initials

Attachment

File location

Our mission is to provide a world-class transportation experience that delights our customers and promotes a prosperous Missouri.

MEMORANDUM

Missouri Department of Transportation
Bridge Division
Central Office

TO: Diane Heckemeyer–de

FROM: *Name*
Senior Engineer, Location & Layout

CC/ATT: Dean Franke-br
Dennis Heckman-br

DATE: *Date*

SUBJECT: Job No._____
_____ County
Route _____
Bridge No. A_____
Bridge Memorandum

Attached for your records is one signed copy of the Bridge Memorandum for the above referenced structure. A Floodplain Development Permit will not be required for this structure.

If you have any questions or comments, please do not hesitate to call me at (573) _____.

Initials

Attachment

File location

Our mission is to provide a world-class transportation experience that delights our customers and promotes a prosperous Missouri.

8.1.2.17 Soundings (Borings)

The purpose of the borings is to determine substructure elements such as pile lengths and whether footings should be spread or pile. Also, if boulders or cobbles are indicated, the piles will need "shoes", also known as pile point reinforcement.

If there is a possibility that drilled shafts will be used, request borings based on using drilled shafts so the appropriate lab work can be done the first time.

Borings should be requested at each bent. For bents on columns, estimate the number and location of the columns for each bent and request borings for these locations. Cores should be taken at each station, alternating locations at the field party's discretion. Each boring should be taken to rock, or 30' into material with a blow count of 20 or higher.

See the next few pages for examples of the standard forms to send to the Construction and Materials Division to request soundings. This is typically done at the same time that the Bridge Memo is sent to the District. The packet sent to the district should include a minimum of the following: (Consultants should contact Structural Liaison Engineer)

1 Copy of the Request for Final Soundings of Structure
(T:\br-proj\A_std_forms\Sounding Request.doc)
2 Copies of the Soundings Layout
(T:\br-proj\A_std_forms\Sounding Layout.doc)
2 Copies of the Bridge Unit Request for Soil Properties
(T:\br-proj\A_std_forms\Request for Soil Properties.doc)
2 Copies of the Plat and Profiles Sheets (half-sized)
2 Copies of Sheet 1A of the Existing Bridge Plans (if applicable)

In addition, an email should be sent to the Geotechnical Engineer and Geotechnical Director in Construction and Materials Division. This email should have the electronic files of the three standard forms attached.

M-40a

FS-29
Rev. 5-4-04

MISSOURI DEPARTMENT OF TRANSPORTATION
P.O. BOX 270
JEFFERSON CITY, MO 65102

Construction and Materials Division **Date:** _____
Request for Final Soundings of Structures

Mike Fritz – Geotechnical Director

The following drilling services are requested.

Route:		(associated with job no.)
County:		
Job or Project Number:		
Structure Number:		
Type Work:		
Over:		
Location:		
Priority:		
Remarks:		

Attached are copies of the following:

Number of Copies	Item
	Sounding Layout
	Plat Sheet & Profile Sheets (half sized)
	Request for Soil Properties
	Existing Bridge Plans

SIGNED: _____
PHONE NUMBER: _____
FIRM: _____
ADDRESS: _____

MoDOT **Construction and Materials Division**

Exhibit 29-A

SOUNDING LAYOUT
GEOTECHNICAL SECTION

Route:	Interstate 44	Structure Number:	A6671
County:	Phelps	Job Number:	J9I0484B
Name of Crossing:	Little Piney, RR, Co. Rd	Date:	8/17/2001
General Location:	12 mi. w. of Rolla	Set up by:	Dennis Heckman

STRUCTURE/SPAN ARRANGEMENTS: (102'-115'-165'-138')(138'-147'-147'-138')
Cont. Composite Plate Girder

SKEW ANGLE: 15 degrees right advance

SECURE SOUNDINGS AT THE FOLLOWING LOCATIONS:
Note: Offsets measured from: CL westbound lane (WBL)

BENT	STATION	OFFSETS
1	264+83	15' left, 15' rt.
2	265+85	15' left, 15' rt.
3	267+00	15' left, 15' rt.
4	268+65	15' left, 15' rt.
5	270+03	15' left, 15' rt.
6	271+41	15' left, 15' rt.
7	272+88	15' left, 15' rt.
8	274+35	15' left, 15' rt.
9	275+73	15' left, 15' rt.

INSTRUCTIONS TO SOUNDING PARTY:

Take cores at each station, alternating locations at your discretion.

Sound to rock or at least 30 feet into material with a blow count of 20 or better.

BENCH MARKS:

BM #6 Sta. 272+78.26 (128.57' left) Elev. 731.75

Exhibit 29-B

Bridge Division Request for Soil Properties

Job #:		N = N60 =	SPT Blowcounts per 12" or per 300 mm to 60% machine efficiency for granular soil in Category A or for cohesive soil in Category A, B, C, or D.
		N = (N1)60 =	SPT Blowcounts per 12" or per 300 mm, corrected to 1 TSF overburden and to 60% machine efficiency for granular soil in Category B, C, or D.
County:		ϕ =	phi angle, internal angle of friction, degrees.
Bridge #:		S_u =	For clay, the undrained shear strength. For rock, the shear capacity, ksf or kPa.
Route:		γ =	Weight per unit volume, pcf or kN/m³ (Saturated unit weight below water table, Natural unit weight above water table).
		E =	Elastic Modulus of soil, ksf or kPa, where: E = 2*(1+v)*G and v = Poisson's ratio = 0.35 (sand), 0.45 (clay), or 0.20 (rock).
		Em =	Rock mass modulus for intact rock, ksf or kPa (AASHTO Div. I, Section 4.4.8.2).
		RQD =	Rock Quality Designation, %.

Bent No's.	Structural Type (Seismic Category)	N #-#-#	ϕ (degrees)	S_u (ksf or kPa)	γ (pcf or kN/m³)	E or Em (ksf or kPa)	RQD (%)	Allowable friction (ksf or kPa)	Allowable Bearing (ksf or kPa)	* F.S. Liquefaction	Water table Elev. (ft or m)	** AASHTO soil profile type
	Bridge (Category A)	X									X	
	Bridge (Category B, C, or D)	X	X	X	X	X				X	X	X
	Drilled Shafts (Category A)	X	X	X	X	X	X	X	X		X	
	Drilled Shafts (Category B, C, or D)	X	X	X	X	X	X	X	X	X	X	X
	Retaining Wall (Category A)	X	X		X						X	
	Retaining Wall (Category B, C, or D)	X	X		X						X	

*** Provide safety factors for liquefaction for the recommended seismic magnitude at the bridge site. The magnitude shall be based on the probabilities of exceedance of 10% in 50 years (approximately corresponding to a return period of 500 years).**

**** Provide soil profile type (type I, II, III, or IV based on AASHTO Div. I-A, Sec. 3.5) at each boring location.**
Note: If an item above is checked, then "X" indicates the soil properties required at each boring location.

Other required soil properties:	**1:**	
(or special instructions)	**2:**	
	3:	
	4:	

8.1.2.18 Substructure Type

Once the signed Bridge Memo and the Borings are received, the entire layout folder should be given to the Preliminary Detailer (requested by SPM, assigned by Structural Resource Manager). The Preliminary Detailer will copy the appropriate Microstation drawings into their own directory T:\br-proj\A_Prelim_design\district\job no. (Do not rename files) Consultants contact Structural Liaison Engineer. The Preliminary Detailer will then draw the proposed bridge on the plat and profile sheets and add the borings to the profile sheets. The bridge should also be drawn on the contracted profile for a perspective of the profile grade relative to the ground line for drainage considerations. The Preliminary Detailer will also generate a draft Design Layout Sheet and then return the layout folder to the Preliminary Designer for review.

The Preliminary Designer will then choose the substructure types for each of the bents. Pile cap bents are less expensive than column bents but they should not be used in the following locations;

- Where drift has been identified as a problem.
- Where the height of the unbraced piling is excessive (kl/r < 120 is a general rule of thumb) (take scour into account).
- Where the bent is adjacent to traffic (grade separations).

For column bents, an economic analysis should be performed to compare drilled shafts to footings with cofferdams. When evaluating the drilled shaft option, keep in mind that the casing should extend at least as high as the elevation that would be used for the seal course design (8.1.2.24). Also keep in mind that the permanent casing should be kept at least one foot below the ground line or low water elevation. Any casing above this elevation will be temporary.

End Bents are usually pile caps; however, if quality rock is abundant at or just below the bottom of beam elevation, a stub end bent on spread footings may be used. If you have any doubt about the suitability and uniformity of the rock, you can still use a pile cap end bent. Just include prebore to get a minimum of 10 feet of piling into the rock. If you have concerns about temperature movements, you can require that the prebore holes be oversized to allow for this movement.

Once the substructure type has been determined, re-examine your preliminary cost estimate and notify the district if it needs to be adjusted.

Foundation Design and Information

Currently Section 10 of AASHTO LRFD is under review and discussion on a national level. Until the information in AASHTO LRFD is finalized and reviewed by MoDOT, it is recommended to follow the current MoDOT procedures for Foundation Design and information.

8.1.2.19 Type of Footings

Once it has been determined that a bent will have columns on footings, the next decision is whether the footings should be pile or spread (on shale or rock). If it is a stream crossing, the bottom of footing elevation should be based on the scour calculations found in the Hydraulic Design section of the (LRFD DG Sec. 8.2). The borings should then be studied to see if a minimum of 10' of piling can be placed below the footings. If this is doubtful because of the presence of shale or rock, a spread footing should be used. In instances where it appears that a spread footing can be used but there are pinnacles in the area, you may want to use a pile footing and just require prebore to insure that you get the minimum embedment of 10 feet. For spread footings on grade separations, include a “not above” elevation to ensure a footing cover of at least 3 feet.

Determining the allowable bearing for a spread footing is the responsibility of the Preliminary Designer and should be placed on the Design Layout Sheet. The following allowable bearing values are recommended, based on the borings:

	Allowable Bearing (service load)	
Type of Foundation Material	English	Metric
Hard Rock (dolomite)	12 tsf	1150 kN/sq. m
Medium Rock (firm limestone)	10 tsf	960 kN/sq. m
Soft Rock (sandstone)	8 tsf	760 kN/sq. m
Shale	6 tsf	575 kN/sq. m

Although these values are more conservative than those indicated by other sources such as LFD AASHTO (Table 4.11.4.1.4-1) or the March 30, 1992 Office Practice letter, they better account for the lack of continuity in the quality or type of rock at a given footing location.

In addition, these lower values provide some allowance for variations in the type of sounding provided. Note that two types of soundings are typically provided by a sounding investigation.

1.) Auger Borings - These are the most typical type of sounding provided due to availability of equipment and low cost. This type of boring is generally stopped immediately upon encountering "hard rock". All description of type of soil and rock encountered is determined in the field.

2.) Core Samples - These are more time consuming and expensive. They are also subject to the availability of the specialized equipment and are therefore provided as sparingly as possible by the sounding crew. Once "hard rock" is encountered at a coring location, drilling is continued for an additional 10 feet to ensure a consistent layer of actual hard rock (not a boulder). If a void layer is encountered in the additional drilling, the drilling is continued until another 10 feet of consistent hard rock is encountered. In addition to field determination of soil layer type and performance of the Standard Penetration Test (SPT), samples are returned to the lab for additional tests such as determination of rock quality (% RQD).

8.1.2.20 Types of Piling

The two types of piling commonly used are bearing pile or friction pile. Bearing pile are H-pile and are commonly used when shale or rock will be encountered at an elevation that will limit the pile lengths to about 100'. Use shoes (pile point reinforcement) if boulders or cobbles are anticipated. Prebore if necessary to achieve minimum embedment.

Here are some guidelines for minimum embedment:

Pile Type	Location	Minimum Embedment
Steel H Pile	All	10'
CIP Pile	End Bents	10' into natural ground
CIP Pile	Int. Bents	15' – 20' below scour depth *

* 15' If the material is hard cohesive or dense granular; 20' if the material is soft cohesive or loose granular.

The Driven computer software may be run with a safety factor of 1.0 to compare with these minimum embedment guidelines if there is concern about very poor soil conditions.

Do not use the pile length to determine the minimum tip elevation. This elevation should be based on achieving the minimum embedment.

Friction pile are usually 14" cast-in-place (CIP) piles but H-pile may be used as friction piles if minimum embeddment is a concern. Estimating the length of friction piles is very important but, unfortunately, quite subjective. The following pages contain the current practice for estimating the lengths of friction piling.

8.1.2.21 Estimating the Lengths of Friction Piles

Overview:

The objective of this subsection is to aid the designers in the Bridge Division given the task of estimating the lengths of friction piles (cast-in-place or CIP). Bob Eskens (summer intern 1999) compiled data for all bridges with CIP pile let in the last 8 years. His investigation found that 94% of the projects had an underrun on piling - that is, they had piling left over. The average underrun was 19%.

Bob located all of the studied bridges on a color-coded state map to determine if there was a geographic pattern to the underruns. About the only definite pattern that emerged was that in Seismic Performance Categories C and D, most of the underruns were less than 10%. This was attributed to the minimum pile tip elevation being controlled by liquefaction.

In the past, there has been very little documentation of how the pile length estimates were calculated so it is practically impossible to determine which of the many methods is more accurate. Effective January 1, 2000, all designers doing preliminary design should use the *DRIVEN* computer program to estimate the lengths for CIP piling. A description of how to use the program, written by Bob Eskens, follows. All calculations used to determine the lengths of the CIP piling should be included in the Preliminary Design calculations kept in the Layout Folder.

One way to check the validity of your *DRIVEN* results is to look at the piling information for existing bridges in the vicinity. Please also be on the lookout for any borings that contain "glacial till" (gravelly clay). This material is notorious for stopping CIP pile.

This procedure is not a substitute for experience and engineering judgment. It is simply an attempt to have a more uniform method for estimating pile lengths so we can adjust our methods in the future, if necessary, due to underruns or overruns.

Estimating Pile Lengths with DRIVEN

To begin a new pile length estimate, all soil data must be obtained as well as elevation information pertaining to intermediate and end bents. The soil borings and core information are then observed. The unit weights of the different soil layers are determined by correlating information from the core data with information found in reference tables (LRFD DG Sec. 8.1.2.21-4 & 5). The resulting unit weights are written on the soil boring page. If the soil is cohesive, the undrained shear strength should be determined by dividing the results of the pocket penetrometer test by two. If there was no pocket penetrometer test performed, then a correlation between the SPT blow counts and the undrained shear strength can be determined from reference tables. The water table must be identified or estimated and labeled on each of the borings and cores. The water table is usually distinguishable by the presence of gray colored soil. Lines should be drawn to link similar soil layers between the borings and cores. This is done so that the soil properties determined from the cores can be used to evaluate similar soil layers found in the borings. Note that more accurate data is obtained from cores than is obtained from borings because borings are performed using an auger type apparatus that mixes and remolds the soil.

To begin a new DRIVEN document, select and open a new DRIVEN file. The project definition screen will appear first. The client information is the only box on this screen that will have no effect on the resulting output file. The units can be converted from SI to English or vise-versa by using the unit system box. The number of soil layers must be filled out to continue to the next screen. The depth of water table at Time of Drilling and for Restrike/Driving is determined from the core or boring that is being evaluated. The depth of water table for Design can be the same or can be taken conservatively as zero feet. The optional design considerations are an option if the top layer of soil is a soft compressible clay, or a scourable soil with small sugar-like grains. When this screen is adequately filled out, click the OK button. This begins the next screen.

The soil profile screen is the core of the data input for the DRIVEN software. To begin, enter the depth to the bottom of layer and the total unit weight of soil in their respective boxes. The driving strength loss is only used in conjunction with a GRLWEAP file and is used for restrike results only. This is generally not used by MoDOT. The box labeled layer soil type is to be filled out next. If the soil contains clay, the cohesive option should be selected and the undrained shear strength should be filled in using information written on the soil boring page of the bridge plans. The graph to be selected with this option is “general adhesion for cohesive soils (Tomlinson 1979)”. If the cohesionless option is selected, two internal friction angles must be entered. To do this, enter the friction angle if it is known, or enter the SPT ‘N’ values and the angle will automatically be determined. Note that no more than five SPT ‘N’ values can be entered per soil layer. If the data contains more than five values for one soil layer, it can be split into two soil layers. When doing this, careful attention

must be paid to the individual soil layer. When the soil layer is complete, use the left mouse button to click on the next soil layer and enter the soil properties in the same way. When all of the soil layers are complete, use the left mouse button to click on the pile type option. When a pile type is selected, a pop up window will be displayed to enter information about the pile. The 'depth of top of pile' allows the length of pile from the bottom of the footing or seal course to the top of the boring or core to be entered when it is at a lower elevation than the top of the boring or core. When this information is complete, click OK and all of the input is finished. The soil profile screen should then appear. Click OK to minimize this screen. To print a pile capacity report, click the icon that reads 'view the tabular results of the computations' then click the report button.

Use the standard pile capacities found in LFD BM 3.74 1.1.1 for the design bearing. This number is then multiplied by the safety factor of 3.5, and the result is used to determine the pile length. Using the 'Ultimate – Summary of Capacities' page of the pile report, find the total capacities that are closest to the factored design bearing. Enter the capacity just less than, and just greater than the factored design bearing on a spreadsheet along with their corresponding depths. The correct depth is then determined by interpolating between these values. The resulting number is then added to the length of pile that has not been accounted for. That is, the pile length above the ground surface of the boring or core, or above the bottom of the footing or seal course. The sum of these is the estimated pile length for this location. This process is then repeated for all other bents of the bridge. An example is shown on page 2.21-6.

Soil Properties

TABLE 6.1.2.4-2: SOIL PROPERTY CORRELATIONS
In the absence of experimentally-determined soil properties, these values may be used as rough estimates.

GRANULAR SOILS / SANDS& GRAVELS

	$(N_1)_{60}$ (blows/ft.)	ϕ (deg)	S_u (ksf)	Dr (relative density)	grain size	E (ksf)	Poisson's ratio, ν	soil type distribution	γ_{dry} (pcf)	$\gamma_{sat.}$ (pcf)	wet(below W.T.) dry(above W.T.)	K(f) * (pci)
Very Loose	0 - 5	27.00	0 - 0.5	0.10	fine medium	100.00 100.00	0.25 0.15	uniform mixed	88.00 95.00	115.00 120.00	wet dry	10 15
Loose	5 - 10	28 - 30	0.5 - 1.0	0.2 - 0.4	fine medium	160-240 200-600	0.25 0.2-0.25	uniform mixed	91.00 99.00	118.00 123.00	wet dry	20 25
Medium	10 - 20	30 - 33	1.0 - 2.0	0.4 - 0.5	fine medium	240-300 600-800	0.25 0.25-0.3	uniform mixed	97.00 104.00	122.00 127.00	wet dry	55 92
Medium Dense	20 - 35	33 - 37	2.0 - 3.5	0.5 - 0.6	fine medium	300-400 800-1000	0.25 0.3-0.35	uniform mixed	103.00 110.00	126.00 131.00	wet dry	90 158
Dense	35 - 70	37 - 44	3.5 - 7.0	0.6 - 0.9	fine medium	400-600 1000-1600	0.25 0.35-0.4	uniform mixed	109.00 116.00	130.00 135.00	wet dry	125 225
Very Dense	75.00	45.00	8.00	0.95	fine medium	700.00 1700.00	0.25 0.45	uniform mixed	112.00 119.00	133.00 138.00	wet dry	150 270

(over)

(cont.)

COHESIVE SOILS / CLAYS & SILTS

	N_{60} (blows/ft.)	$c = S_u$ (ksf)	E (ksf)	Poisson's ratio, ν	γ_{dry} (pcf)	$\gamma_{sat.}$ (pcf)	K (f) * (pci)	ε_{50} * (in./in.)
Very Soft	0 - 5	0 - 0.5	50-150	0.50 (sat.) 0.40 (unsat.)	73.00	105.00	50.00	0.02
Soft	5 - 10	0.5 - 1.0	150-300	0.50 (sat.) 0.39 (unsat.)	76.00	110.00	100.00	0.01
Medium Stiff	10 - 20	1.0 - 2.0	300-650	0.50 (sat.) 0.38 (unsat.)	86.00	116.00	500.00	0.007
Very Stiff	20 - 35	2.0 - 3.5	650-1000	0.50 (sat.) 0.37 (unsat.)	96.00	123.00	1000.00	0.005
Hard	35 - 70	3.5 - 7.0	1000-1500	0.50 (sat.) 0.36 (unsat.)	106.00	129.00	2000.00	0.004
Very Hard	75.00	7.50	1500-2000	0.50 (sat.) 0.35 (unsat.)	108.00	134.00	3000.00	0.0035

N_{60} = Standard Penetration Test blowcount, blows / ft., to 60% machine efficiency.
ϕ = angle of internal friction, for cohesionless sands and gravels, degrees
c = cohesion of cohesive clays and silts, ksf
S_u = shear strength of soil at a given normal stress, ksf.
For sands (c = 0), $S_u = p * \tan(\phi)$, where p = effective normal stress, or $S_u = N / 10$, in ksf.
For clays (ϕ=0), $S_u = c$, and therefore shear capacity is independent of normal stress.
For mixed soils (ϕ-c soils), $S_u = c + p * \tan(\phi)$
For clays, c can be estimated from (unconfined compression strength, Qu)/2).
E = Young's Modulus = Elastic Modulus, ksf. $E = 2*(1+\nu)*G$
G = Shear Modulus, ksf
γ = soil unit weight, pcf. $\gamma = \gamma_{dry} * (1 + w)$, where w = water content, unitless
K = f = slope (variation) of linear subgrade modulus.
W.T. = water table elevation, feet
ε_{50} = strain at 50% of the maximum difference in principal stresses, unitless

* : For p-y curve analysis

Bob Eskens		08/02/99			Seismic	Total Length of Pile	
Bridge #	Job#	County	Pile Type	Letting	Category	Estimated	Actual
A-5978	J3P0441	Clark	CIP	Jun-99	A	2,715.3	

Using a safety factor of 3.5 (350%).
q'd Design Bearing (KN) =

3.5 x 280 KN = 980KN
3.5 x 250 KN = 875KN
3.5 x 190 KN = 665KN

Drivin Results	Meters	KN	Interpolation	
bt. #1 Wall Wings	5.78	558.25	7.0	Wing (665 KN)
	8.66	808.46		
Core # 1	13.51	910.35	14.5	End (980 KN)
	15.54	1047.16		
Core # 1 bt. 2,3	4.03	437.87	10.5	Int.#2,3 (875 KN)
	6.06	574.68		
Core # 4 - bt. 2,3	4.65	424.93	10.2	Int.#2,3 (875 KN)
	7.58	661.64		
Core #4 bt. 4	16.42	912.22	16.0	Int. #4 (875 KN)
	19.42	1201.91		
Core #4 bt. 5	14.134	796.44	16.4	End (980 KN)
	17.064	1033.15		
bt. #5 Wall Wings	10.8	536.07	12.4	Wing (665 KN)
	13.8	778.46		

nt#	#of Piles	Boring Correlation	Depth (m) Per Pile	Above Ground length addition	Reduction Factor	Length Per Pile	Length Per Bent		
1-W	14	#1	7.0	0.3	0.85	6.22	87.0		
1	16	#1	14.5	0.5	0.85	12.75	204.0	Ends =	433.4
2	60	.33*4+.67*1	10.4	1.1	0.85	9.79	587.5		
3	60	.33*1+.67*4	10.3	1.1	0.85	9.71	582.3	Int. =	2,043.7
4	60	#4	16.0	1.1	0.85	14.56	873.9		
5	16	#4	16.4	0.5	0.85	14.34	229.4	Wing =	238.2
5-W	14	#4	12.4	0.3	0.85	10.80	151.1		
Total Length Est. using Driven =							2,715.3	Total =	2,715.3

	P. P. (Kg/cm^2)	KSF	lb./ft.^3	KN/M^3	KPa
Core # 1	2.94	3.01	123.00	19.32	144.08
Core # 4	1.38	1.41	86.00	13.51	67.44

P.P.-KSF	lb./ft.^3-KN/M^3	P.P.-KPa
Conv. Factor	Conv. Factor	Conv. Factor
1.02	0.16	49.05
(K*cm^2/2Kg*ft^2)	(KN*FT.^3/LB.*M^3)	(Kg*KN/2M*S^2*N)

8.1.2.22 Drilled Shafts

Drilled shafts are to be used when their cost is comparable to that of large cofferdams and footings. Other examples include when there are subsurface items to avoid (culverts, utilities, etc.) or when there are extremely high soil pressures due to slope failures. The borings report for drilled shafts should supply you with the allowable end bearing and side friction as well as the elevations for which the allowable rock values are applicable. It may also include a recommended minimum length for the rock socket.

8.1.2.23 Excavation Datum

An Excavation Datum should be placed on the Layout Sheet when water is expected to be encountered during the excavation for footings. The elevation used is usually the Low Water Elevation plus 1 foot (rounded up to the next even foot) but may be made slightly higher on bigger streams and rivers. Everything above this datum is Class 1 Excavation while everything below it is Class 2 Excavation.

8.1.2.24 Seal Courses

On structures over water with pile footings, a determination should be made as to whether or not to include seal courses. Seal courses are used in conjunction with cofferdams when a contractor may have trouble dewatering the footing excavation. They are usually necessary when you have sandy or gravelly soils and footing elevations below the stream bed. You will need to include a water surface elevation on the Design Layout Sheet for which the Seal Courses should be designed for. Typically the elevation used is the average of the Low Water Elevation and the Design High Water Elevation; however, a site visit may be required to determine how reasonable this is. In no case should this elevation be higher than the 10 year high water elevation or the overbank elevation.

8.1.2.25 Cofferdams

Cofferdams should be included if the depth of the hole for the footing exceeds 8 feet and/or the bottom of footing elevation is below the Ordinary High Water (OHW) elevation. Any bent that requires a seal course will also require a cofferdam. These are bid lump sum per bent. Consult with the Senior Technical Support Engineer about this. All piling in pile footings should be straight (not battered) when a cofferdam is expected.

8.1.2.26 Webs

On structures over water where medium to heavy drift has been indicated on the Bridge Survey, consider using web walls between the columns on the column bents near or in the stream. The bottom elevation for the web is typically 1' higher than the overbank elevation.

8.1.2.27 Protection of Spill Slopes

On grade separations and railroad crossings, the spill slopes are typically protected by Concrete Slope Protection, which is a Roadway Pay Item. On stream crossings, Rock Blanket is usually placed. The type and thickness of Rock Blanket is to be determined by the District based on the flow velocity from the Design High Water. This flow velocity is determined by the person doing the hydraulic calculations and should be placed on the Bridge Memo.

When Rock Blanket is used, an elevation for the upper limit of this protection needs to be calculated. First, calculate the following two elevations:

100 year High Water Elevation plus 2 feet

500 year High Water Elevation plus 1 foot

Take the higher of these two elevations and compare it to the Low Girder Elevation minus 1.2 feet. Use the lowest of these two elevations for the upper limit of your Rock Blanket. This elevation should be placed on the profile sheets.

If the toe of the abutment slope falls on the overbank, the rock blanket apron should extend from the toe toward the channel a distance equal to twice the 100 year flow depth on the overbank, but need not exceed 25 feet.

8.1.2.28 Design Exceptions

Anytime MoDOT standards are not followed, a Design Exception is necessary. These are usually initiated by the Transportation Project Manager in the district; however, if the item is related to the bridge, the Bridge Division will initiate the Design Exception (PDM 2-01.8).

The Design Exception form (PDM FIG. 2-01.9) should be filled out by the preliminary designer and then reviewed by the Structural Project Manager (SPM). The SPM should then submit the Design Exception to the Assistant State Bridge Engineer for review. After this review, the Design Exception should be submitted to the State Bridge Engineer for his signature. This submission should include written comments from the SPM on why the Design Exception should be approved. Once the Design Exception has been signed by the State Bridge Engineer, the SPM should mail it to the Transportation Project Manager in the district. The TPM will sign it and then send it to the General Headquarters Design Division for final approval. The Design Division will supply copies of the signed Design Exception to both the district and the Bridge Division.

Some examples of Design Exceptions initiated by the Bridge Division are:

Hydraulic Standards

These include not meeting the standards for freeboard, design frequency, etc.

Vertical Clearance

If the vertical clearance under a new or widened bridge does not meet the standard, a Design Exception is required. If the reduction in vertical clearance is due solely to the overlay of the road under the bridge, the Bridge Division would not initiate the Design Exception.

Roadway/Shoulder Width Less Than Standard (New Structures)

On new structures, if the roadway and/or shoulder widths on the bridge match the approach roadway, the Design Exception would be initiated by the district. If the roadway and/or shoulder widths on a new bridge are less than the approach roadway, the Design Exception would be initiated by the Bridge Division. Also consult the “collector route” letter from Laffoon to Sfreddo dated August 13, 1999.

Roadway/Shoulder Width Less Than Standard (Existing Structures)

On Non-Interstate Rehab (3R) jobs, an exception for width is required any time we don’t meet the new design standards (PDM Fig. 2-01.3 thru 2-01.5). The approach lanes being referred to in Fig. 2-01.4 note (8) are the new lanes. The last note should be modified to read “Bridges programmed for replacement within 5 years may be allowed to remain in place as is and should be looked at on a case by case basis.”

On Interstate Rehab (4R) jobs, an exception for width is required any time we don't meet the new design standards (PDM Fig. 4-04.1). If an existing bridge is over 200 feet long, FHWA has said that they will routinely approve the width if both shoulders are at least 3.5' wide, but we should still request the Design Exception. FHWA will want to see any approved Design Exceptions before they approve the preliminary design.

MEMORANDUM

Missouri Department of Transportation
Bridge Division
Central Office

TO: *Name-District #*

FROM: *Name*
Structural Project Manager

DATE: *Date*

SUBJECT: Bridge No. A_____ over _____
Job No. _____, Route____, _____County

Please find enclosed a Design Exception Form for the above referenced bridge. This form has already been signed by the State Bridge Engineer. Please sign and forward to Central Office Design Division for further handling.

If you have any questions or comments, please do not hesitate to call me at (573)_____.

Initials

Attachments

File location

Our mission is to provide a world-class transportation experience that delights our customers and promotes a prosperous Missouri.

DESIGN EXCEPTION INFORMATION

Route: County: Job Number:

A. Design Stage:

☐ Conceptual Plan ☐ R/W Certification

☐ Preliminary Plan ☐ Final (PS&E)

☐ Other (_____)

B. Provide data for <u>only</u> those items which are proposed to have a design exception.

☐ English ☐ Metric Functional Classification:

Type of Data	Existing	Standard	Proposed	Location
1. Design Speed 2. Lane Width 3. Shoulder width Inside Outside				
4. Bridge Loading Width Rail Approach Rail				
5. Horizontal Alignment Degree Curve/Radius SSD				
6. Vertical Alignment Sag K Crest SSD 7. Grade % 8. Cross Slope				
9. Superelevation				
10. Horizontal Clearance (Clear Zone)				
11. Vertical Clearance				
12. Other (Hydrologic)				

C. Give reasons for requesting design exceptions for each design element.

Request for Design Exceptions:

(NOTE: Include only for consultant designed projects.)

By: _____ Date: _____
Consultant Project Manager

_____
Name of Consulting Firm

By: _____ Date: _____
MoDOT Transportation Project Manager

By: _____ Date: _____
MoDOT Structural Project Manager

Approved: (Include only applicable signatures.)

By: _____ Date: _____
Division Engineer, Design

By: _____ Date: _____
Division Engineer, Bridge

By: _____ Date: _____
FHWA

8.1.2.29 Finishing Up Design Layout

Once the Preliminary Detailer has created the Design Layout Sheet and added the borings and details of the proposed bridge to the plat and profile sheets, they should be checked by the Preliminary Designer. These sheets are the end product of the Preliminary Design process and will be used to perform the structural calculations for the Final Design phase of the bridge, which results in the production of the contract plans. Here is a list of items to include.

1.) General Information
   a. Live load designation
   b. Traffic counts for the design year (ADT and ADTT).
   c. Tie station (if applicable).
   d. Beginning station.
   e. Horizontal curve data.
   f. Profile grade information (including offset from CL of roadway or median).
   g. Excavation datum.

2.) Superstructure
   a. Type and span lengths.
   b. Roadway widths and type of barrier curbs.

3.) Substructure
   a. Skew(s) of all bents.
   b. Types of all bents.
   c. Locations of cross-bracing or webs.
   d. Locations and top of wall elevations for collision walls.

4.) End Bents (Abutments)
   a. Type of end fill and maximum slope. Include earth plugs for piling in rock fill.
   b. Berm elevations.
   c. Type and extent of slope protection and need for geotextile material.
   d. Angle of internal friction to be used for deadman anchors.

5.) Foundations
   a. Type and lengths of all piling.
   b. Minimum tip elevations for friction piles.
   c. Location and elevation for any preboring.
   d. Location of any pile point reinforcement (shoes).
   e. Types of footings, their elevations and allowable bearing (if applicable).
   f. Location of any cofferdams and/or seal courses.
   g. End bearing and side bearing capacity for any drilled shafts.
   h. Top of Rock Socket elevations and their minimum lengths.

6.) Traffic Handling
   a. How will traffic be handled (bypass, road closure, staging, other)
   b. Include a sketch of any staging.

7.) Disposition of Existing Structure
   a. Bridge No(s). of structures slated for removal.
   b. Estimate cost of removal and indicate that this cost is included in the total.

8.) Hydraulic Information
   a. Drainage area and terrain description.
   b. Design frequency.
   c. Design discharge.
   d. Design high water elevation.
   e. Estimated backwater.
   f. Overtopping frequency and discharge if less than 500 yr.

9.) Miscellaneous
   a. Locations of Bridge Approach Slabs.
   b. Call out slab drain requirements if other than the standard procedure.
   c. The location of the stationing reference line (CL roadway, CL median, other).
   d. Station equations.
   e. Minimum final and construction clearances (vertical and horizontal).
   f. Use of weathering steel or color of paint (steel girders).
   g. Name and phone number of District Contact.
   h. Preliminary cost estimate.
   i. Details of any utilities to be attached to the bridge.

j. Details of any conduit, light supports or any other unusual attachments.
k. Channel change requirements.
l. Temporary shoring requirements and whether it is a Bridge or Roadway Item.
m. Location of Maint. facility contractor is to use for delivery of MoDOT retained items.
n. Directory/path for any Ceal, Geopak or Microstation files used for layout of bridge.

Once the Preliminary Detailer and Designer are in agreement on these items, the entire layout folder should be submitted to the SPM for their review. The SPM will then request a Design Layout Conference with the Assistant State Bridge Engineer and the Structural Resource Manager.

Following this conference, the Preliminary Detailer and Designer will make any requested changes and complete the assembly of the Layout Folder by including the approved Design Layout Sheet and one set of full sized plat and profile sheets. The Layout Folder should then be delivered to the SPM along with one set of half-sized plat and profile sheets and a copy of the Design Layout Sheet.

The Preliminary Detailer should provide a copy of the Design Layout Sheet to the Bridge Survey Processor. The Bridge Survey Processor should then perform the following tasks:

- Enter the Date to Final Design in the Bridge Survey Book and the Survey Rcv. Database
- Supply a copy of the Design Layout Sheet to Development and Review.
- Copy all of the Microstation files in house to
- T:\br-proj\A_Prelim_design\district\job no.
- (Consultants contact Structural Liaison Engineer).

The SPM should then enter the following information into Bloodhound.

- Span layout information
- Preliminary Cost Estimate
- Date of Layout Conference
- Date to Final Design

All other fields in Bloodhound should be updated at this time by the SPM.

The SPM should then use a cover letter to send one set of half-sized plat and profile sheets, as well as a copy of the Design Layout Sheet, to the Transportation Project Manager in the district. Include in this cover letter any changes in the Preliminary Cost Estimate and the current Plans Completion Date. An example can be found on the next page.

MEMORANDUM
Missouri Department of Transportation

Bridge Division
Central Office

TO: *Name-District #*

FROM: *Name*
Structural Project Manager

DATE: *Date*

SUBJECT: Bridge No. A____ over _____
Job No. _____, Route____, _____County

Please find enclosed one set of half-sized prints of the plat and profile sheets, as well as a copy of the Design Layout sheet for the above referenced bridge.

The cost estimate for this structure has not changed from that provided to you on the Bridge Memorandum. This structure has entered into the Final Design phase and is currently scheduled for a plans completion date of _____. Our records indicate that this project will NOT have a prebid conference. If this is incorrect, please advise.

If you have any questions or comments, please do not hesitate to call me at (573)_____.

Initials

Attachments

File location

Our mission is to provide a world-class transportation experience that delights our customers and promotes a prosperous Missouri.

8.1.2.30 FHWA Submittal

If the job involves an interstate or a bridge over 1,000 feet long on the National Highway System, the layout needs to be submitted to FHWA for their approval (PDM 1-04.2). The submittal should include the following:

- Cover letter (example on following pages)
- One set of half-sized plat and profile sheets
- One copy of Design Layout Sheet
- One copy of completed form BR105R (gray sheet)
- One copy of the Borings report including Cover Letter from Materials
- One copy of each approved Design Exception (if applicable)
- One copy of the Bridge Deck Condition Survey Summary (if applicable)
- One copy of the Bridge Rehab Checklist (if applicable)
- One copy of the Bridge Inspection Report for the existing bridge (if applicable)
- One copy of half-sized existing bridge plans (if applicable)
- One copy of anything else referred to on the Design Layout Sheet (an example would be top of pavement elevations if these are to be used in Final Design)

That is the end of the Preliminary Design phase of bridge design at MoDOT.

Bridges/Boxes

Missouri Department of Transportation

105 West Capitol Avenue
P.O. Box 270
Jefferson City, MO 65102
(573) 751-2551
Fax (573) 751-6555
www.modot.org

Pete K. Rahn, Director

DATE: April 20, 2000

TO: Allen Masuda
Division Administrator
Federal Highway Administration

Attention: Glenn Fulkerson

FROM: Al Laffoon
State Bridge Engineer

SUBJECT: Bridges
Design Layout
Bridge No. A6284
Job No. J1I0762, Interstate 29, Buchanan County

The above project involves the replacement of Bridge No. A-2 which carries Faraon Street over Interstate 29 in the City of St. Joseph. Faraon Street is being completely rebuilt by the City of St. Joseph and widened from two lanes to three. A bicycle path and sidewalk are also being added. Faraon Street will be closed to traffic to remove and replace the bridge.

The existing bridge has a vertical clearance of 15 feet 11 inches while the new bridge will have a vertical clearance of 16 feet 6 inches. The new bridge will also have spans long enough to accommodate the ramp lanes for a proposed folded diamond interchange at this location. There currently is no access to Interstate 29 at this location.

In order to limit the amount of impact on the traveling public, we intend to build this project with two contracts. The first contract will be in our August 2000 letting and will involve fabrication of all of the structural steel pay items. The second contract will be in the February 2001 letting and will involve the removal of the existing bridge as well as the construction of the new bridge. Our reason for splitting this project up is to allow ample time for the fabrication of the structural steel items with the goal of opening the new bridge in time for the start of the fall 2001 semester at Missouri Western State College.

The preliminary layout has been reviewed and approved by the Bridge Division and by District Design personnel and is now ready to proceed to final design.

No design exceptions are anticipated for this structure.

Our mission is to provide a world-class transportation experience that delights our customers and promotes a prosperous Missouri.

Allen Masuda
Page 2
April 20, 2000

Attached is a copy of the front sheet of the existing bridge plans, the design layout sheet and a full sized set of the plan and profile sheets for your review. I have also attached a copy of the borings report. We request your comments and approval regarding this project so that the final design may proceed. Time is of the utmost importance in this request due to the fact that we intend to let the first contract in August of this year.

If you have any questions or need further information, please call Dennis Heckman at (573) 526-0245.

Initials

Attachments

Copy: Anthony McGaughy-1

8.1.2.31 Aesthetic Enhancements

Aesthetic enhancements can include everything from form liners and different colored paints to actual brick or stonework on the bridge. The district is required to inform the Bridge Division if aesthetic enhancements will be required on a bridge. Aesthetic enhancements should be discussed by the core team during the scoping process.

Note: Galvanized slab drains are to remain unpainted unless otherwise requested by the district. The required special provision is available if the district wishes to paint the galvanized slab drains.

8.1.3 Overlays/Rehabs/Redecks/Widenings

8.1.3.1 Overview

Modifying existing bridges is quite different than laying out new bridges. The preliminary design process for work on existing bridges is very complicated and more liquid. Many of the rules are simply notes from past jobs that were approved by FHWA. These types of projects can be broken into four general categories:

1.) Overlaying an existing bridge as part of a roadway overlay project.
2.) Rehabilitating and/or redecking an existing bridge as a stand alone programmed project.
3.) Widening an existing bridge to meet minimum shoulder width requirements as part of a roadway overlay project.
4.) Widening an existing bridge to add lanes as part of a roadway project.

8.1.3.2 Bridges on Resurfacing Projects

This is probably the most common type of project. The first step is to determine the limits of the project. This can be done by looking at the description and log miles of the project in the Program Book. The District Contact should also be consulted to make sure the project limits have not changed. The second step is using the Bridge Maps produced by the Maintenance Division to locate any and all bridges within the limits of the project.

Once the Bridge Nos. for these structures are known, obtain a copy of the Bridge Maintenance report for each structure. These reports contain the log mile for each structure. Compare this to the log mile limits of the project. If the log mile on the report indicates the bridge is outside of the project limits, check with the District Contact again to see if the bridge is to be included in the project.

If a bridge falls within the project limits, it must be evaluated to see if it meets the current safety criteria for such items as shoulder width and curb type/height. If the job will be built with federal funds, any substandard safety item must be remedied or handled with a Design Exception. If the job will be built with 100% state funds, the bridge can be left alone (no safety improvements).

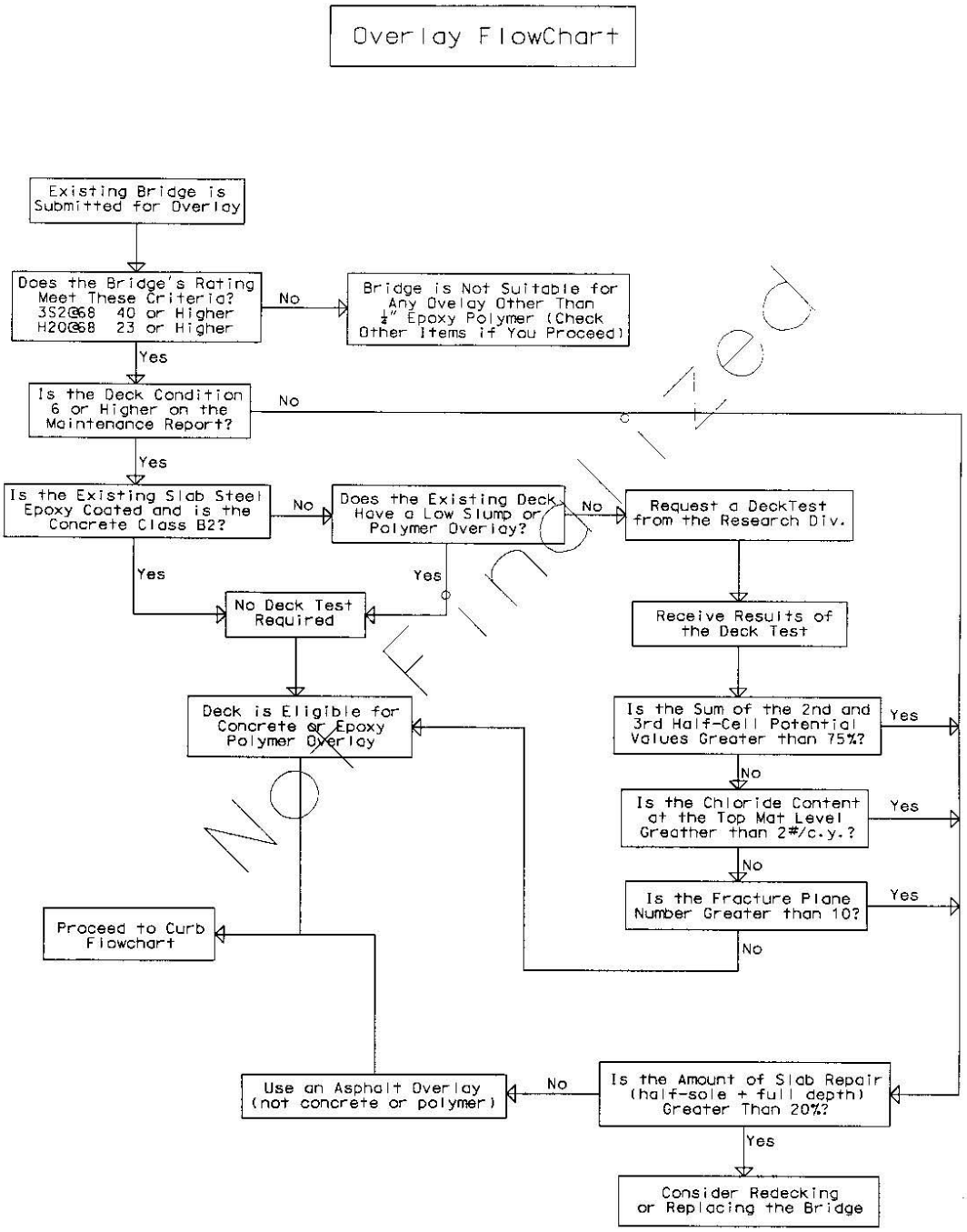
Overlay FlowChart
Existing Bridge is Submitted for Overlay
Does the Bridge's Rating Meet These Criteria? 3S2@68 40 or Higher H20@68 23 or Higher
No
Bridge is Not Suitable for Any Ovelay Other Than ¼" Epoxy Polymer (Check Other Items if You Proceed)
Yes
Is the Deck Condition 6 or Higher on the Maintenance Report?
No
Yes
Is the Existing Slab Steel Epoxy Coated and is the Concrete Class B2?
No
Does the Existing Deck Have a Low Slump or Polymer Overlay?
No
Request a DeckTest from the Research Div.
Yes
Yes
No Deck Test Required
Receive Results of the Deck Test
Deck is Eligible for Concrete or Epoxy Polymer Overlay
Is the Sum of the 2nd and 3rd Half-Cell Potential Values Greater than 75%?
Yes
No
Is the Chloride Content at the Top Mat Level Greather than 2#/c.y.?
Yes
No
Is the Fracture Plane Number Greater than 10?
Yes
No
Proceed to Curb Flowchart
Use an Asphalt Overlay (not concrete or polymer)
No
Is the Amount of Slab Repair (half-sole + full depth) Greater Than 20%?
Yes
Consider Redecking or Replacing the Bridge
Not Finalized

8.1.3.3 Curb Type and Height

Three types of curbs are acceptable in Missouri; Thrie Beams, Safety Barrier Curbs (SBC) and Curb and Parapets.

When using the SBC or Curb and Parapet, a five-hole bolt pattern must be used to connect the approach railing to the bridge curb.

A) Thrie Beam

i) If the deck is less than 8.5" thick, the attachment must bolt through the deck with a plate on the bottom side of the deck. The details showing anchoring with a bent stud formed within the deck is no longer acceptable. (The deck is too thin and the deck edge breaks off during a collision.)

ii) The center of the rail shall be 21" to the top of the finished driving surface.

iii) Thrie Beams are not a preferred railing for interstate or high ADT's.

B) Safety Barrier Curb (SBC)

i) If installed at the time of the driving surface, the top of the curb should be no less tha 2'-8" above the driving surface.

ii) If the wearing surface is installed after the SBC is in place, the wearing surface shall be no greater than 2", making the curb 2'-6".

C) Curb and Parapet

i) The concrete portions of the curb and parapet are the only components that are used in calculating the height of the rail. The handrails are not crash worthy.

ii) Curb and Parapets can be as short as 2'-3" from the driving surface if no raise in grade is added. Once a wearing surface, (other than ¼" epoxy), is applied, the parapet must then be heightened to 2'-8" above the finished driving surface. This is generally done by adding curb blockouts to the existing curb and parapet.

iii) The horizontal dimension of the step from the driving face of the curb to the driving face of the parapet is recommended to be between 0" to 3" but cannot to exceed 6". If a curb blockout is used, this dimension cannot exceed 3".

iv) Many times the end posts are not the same width as the parapets. Check to see if the end posts are wider and if they extend towards the driving lanes or to the outside edge. It may be necessary to remove the end posts all together to accommodate for blockouts.

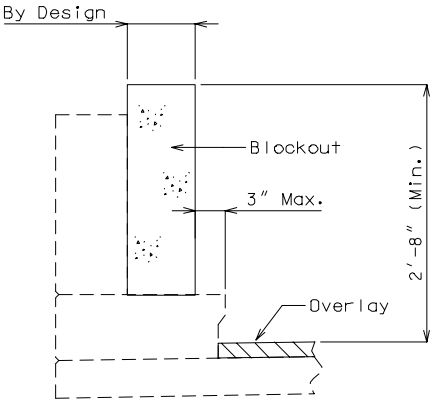

BLOCKOUT ON TOP OF
EXISTING CURB

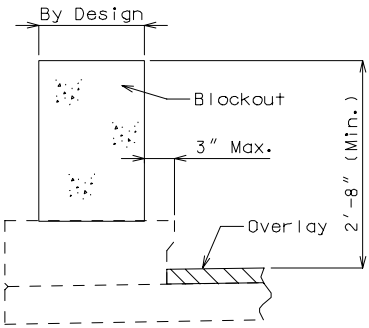

BLOCKOUT ON TOP OF
EXISTING CURB

ACCEPTABLE CURB BLOCKOUT CONFIGURATIONS

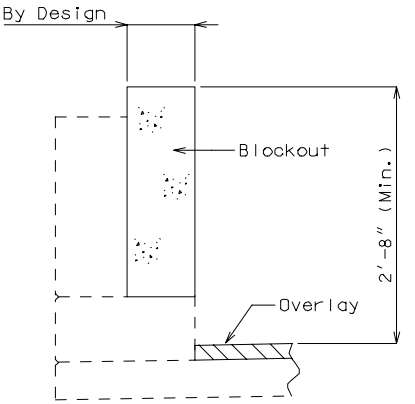

BLOCKOUT ON TOP OF
EXISTING CURB

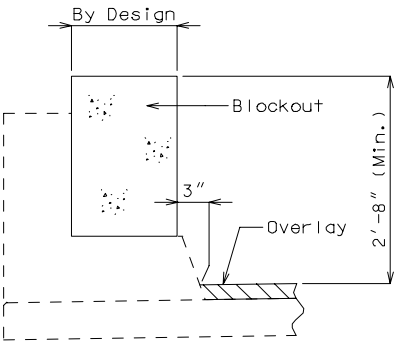

BLOCKOUT ON TOP OF
EXISTING CURB

ACCEPTABLE CURB BLOCKOUT CONFIGURATIONS

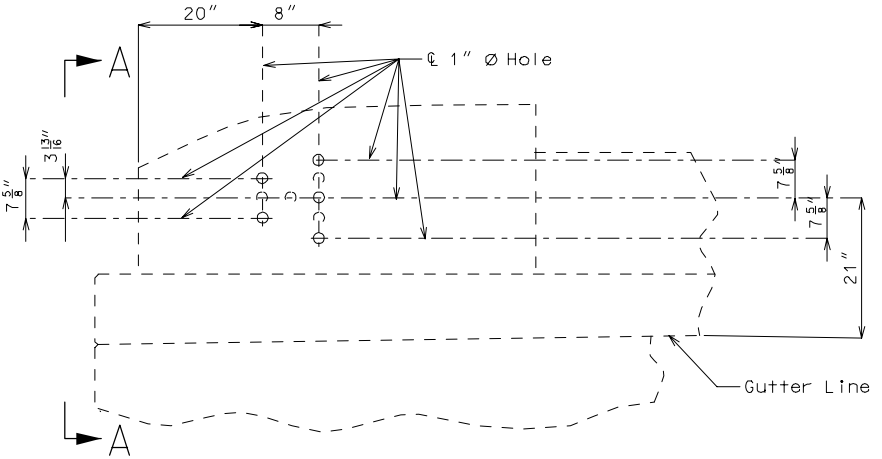

PART ELEVATION

Note: Existing holes (For guard rail attachment) in existing bridge parapet shall be filled with an approved epoxy mortar.

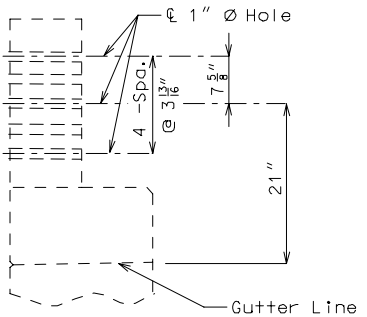

ELEVATION A - A

HOLES FOR NEW BRIDGE ANCHOR ATTACHMENT TO EXISTING CURB AND PARAPET

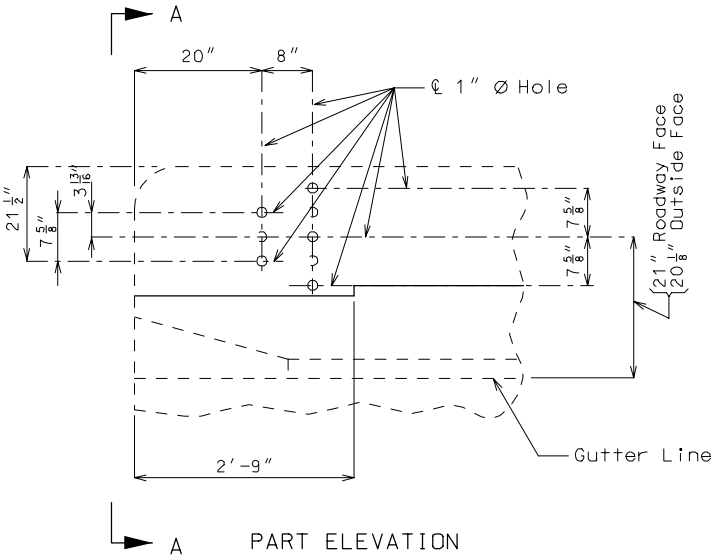

PART ELEVATION

Note: Existing holes (For guard rail attachment) in existing bridge parapet shall be filled with an approved epoxy mortar.

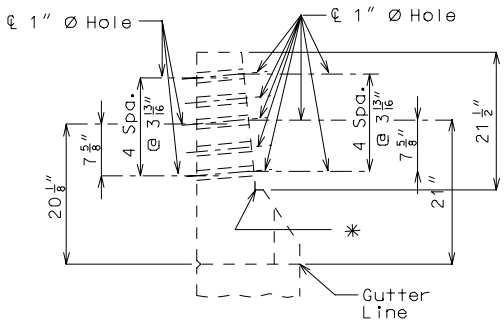

* Remove this area of Safety Barrier Curb for Guard Rail Attachment

PART ELEVATION A-A

HOLES FOR NEW BRIDGE ANCHOR ATTACHMENT TO EXISTING CURB AND PARAPET

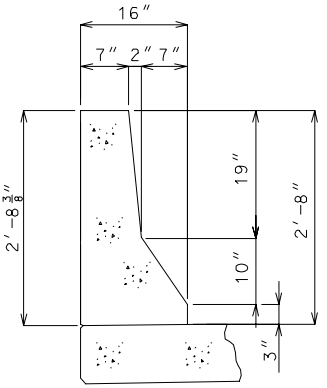

16″ SBC (2′-8″)
(New Curb)

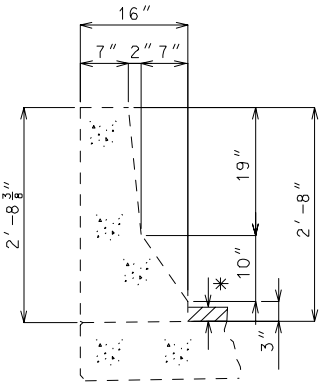

✳ 2″ (Max. Overlay)

16″ SBC (2′-8″)
(Exist. With Overlay)

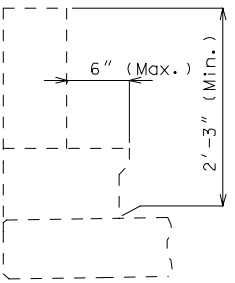

Curb & Parapet
(No Overlay)

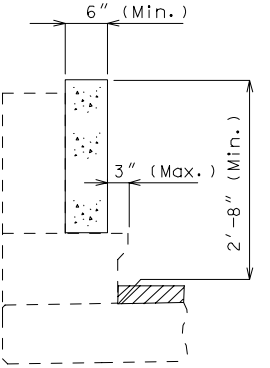

Curb & Parapet
(Change in Grade)

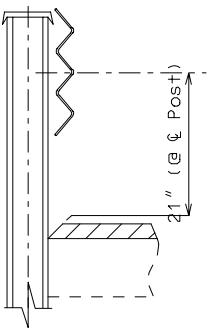

Thrie Beam
(Change in Grade)

ACCEPTABLE RAILS

8.1.3.4 Bridge Rehab Checklist

An example of a “Check List for Rehabilitation Work on Existing Bridges” is shown on pages 3.4-2 through 3.4-5.

CHECK LIST FOR REHABILITATION WORK ON EXISTING BRIDGES
Revised December 15, 1999

Br. No.:_____ Route:_____
County:_____ Over:_____
Job No.:_____ (route or stream)
Date of Field Inspection:_____

Please attach photographs for all items that apply.

1. **Existing Overlay**
Does the bridge have an existing overlay? yes/no
If yes, what type of overlay is it(asphalt,low slump,etc.)?_____
If yes, what is the thickness of the overlay? _____
If yes, have any deck repairs been made through the overlay? yes/no
Comments:

2. **Repair of Existing Deck (excluding overhangs)**
Estimate the square feet of Half-Soling necessary. _____
Round up to next multiple of 50 (ex. 51 sq. ft. rounds to 100 sq. ft.).

Estimate the square feet of Full Depth Repair necessary. _____
Round up to next multiple of 25 (ex. 51 sq. ft. rounds to 75 sq. ft.).

Give a brief description of how these estimates were obtained.
(ex. include sounding with a chain, visual inspection, maint. rep., etc)

Comments:

3. **Repair of Slab Edge/Overhang**
Estimate the linear feet of Slab Edge Repair necessary. _____
(This item covers the outside 4" of an exist. slab overhang)

Estimate the square feet of Slab Overhang Repair necessary. _____
(This item covers the bottom of the overhang beyond the outside 4")

Comments:

CHECK LIST FOR REHABILITATION WORK ON EXISTING BRIDGES
Revised December 15, 1999

4. **Recommendation for Existing Expansion Devices**

Bent No.	Circle One	Gap Status
_____	use-in-place/repair/replace	open/closed
_____	use-in-place/repair/replace	open/closed
_____	use-in-place/repair/replace	open/closed
_____	use-in-place/repair/replace	open/closed
_____	use-in-place/repair/replace	open/closed
_____	use-in-place/repair/replace	open/closed
_____	use-in-place/repair/replace	open/closed
_____	use-in-place/repair/replace	open/closed

Comments:

5. **Salvage Existing Rail for MoDOT**

Does the local Maint. Super. want the exist. steel rail? yes/no/na
(Keep in mind we typically pay $6 to $8 per lin. ft. for this item)
If yes, please provide the address for the contractor to take the rail.

6. **Paint System (excluding bearings)**

Does the bridge have any painted members? yes/no
If yes, what type of paint system is in place (A, B, etc.)? _____
If yes, when were the members last painted? _____
If yes, do the members need to be repainted? yes/no
sandblast/overcoat/na

Comments:

7. **Recommendation for Existing Bearings**

Bent No.	Circle all that apply
_____	do nothing/repaint/repair/reset/replace
_____	do nothing/repaint/repair/reset/replace
_____	do nothing/repaint/repair/reset/replace
_____	do nothing/repaint/repair/reset/replace
_____	do nothing/repaint/repair/reset/replace
_____	do nothing/repaint/repair/reset/replace
_____	do nothing/repaint/repair/reset/replace
_____	do nothing/repaint/repair/reset/replace

Comments:

CHECK LIST FOR REHABILITATION WORK ON EXISTING BRIDGES
Revised December 15, 1999

8. Repair of Existing Substructure Units

Estimate the square feet of Substructure Repair at each bent.
(Circle 'F' for formed or 'U' for unformed)

Bent No.	Square Ft.	Type	Location (ex. west face of beam cap)
		F/U	
		F/U	
		F/U	
		F/U	
		F/U	
		F/U	
		F/U	
		F/U	

Comments:

9. Any Comments on the Channel Align. or Erosion

10. Describe Other Misc. Work Needed on the Bridge

11. Comments from the Special Crews/Maint. Personnel

12. List of Persons Who Assisted in Completing the Checklist

Name	Title	Phone Number

CHECK LIST FOR REHABILITATION WORK ON EXISTING BRIDGES
Revised December 15, 1999

13. Signature Blocks

I have reviewed the information on this checklist and believe it to be as accurate as possible:

_____ _____
Resident Engineer Date

_____ _____
Transportation Project Manager Date

Use this space for any sketches that may be helpful for those producing the plans and/or for those inspecting the work once it is under contract (Attach additional sheets if necessary).

8.1.4 Retaining Walls

8.1.4.1 Overview

This section is intended to help with the issues unique to retaining walls. Many sections in the “Bridges/Boxes” section of this manual will still need to be used when working on retaining walls.

Retaining walls are very much like bridges in that they require the many of the same items, such as:

- Bridge Survey
- Bridge Number
- Bridge Memorandum
- Soundings
- Design Layout Sheet

8.1.4.2 Types of Walls

There are two general types of retaining walls used by MoDOT; cast-in-place (CIP) concrete walls and mechanically stabilized earth (MSE) walls. MSE walls are the preferred type due to their lower cost; however, there are several times when MSE walls cannot be used. These include:

- When barrier curb must be attached to the top of the wall.
- When the underlying soil cannot support the weight of the fill and wall (must use CIP on piling).
- When you don't have adequate room behind the wall for the reinforcing straps (need horizontal clearance behind the wall of approximately 0.7 times the height).

AASHTO C11.10.2.1

"In general a minimum reinforcement length of 8.0 ft. regardless of wall height, has been recommended based on historical practice, primarily due to size limitations of conventional spreading and compaction equipment. Shorter minimum reinforcement lengths, on the order of 6.0 ft. , but less than 70 percent of the wall height, can be considered if smaller compaction equipment is used, facing panel alignment can be maintained, and minimum requirements for wallexternal stability are met.

The requirement for uniform reinforcement length equal to 70 percent of the structure height has no theoretical justification, but has been the basis of many successful designs to-date. Parametric studies considering minimum acceptable soil strengths have shown that structure dimensions satisfying all of the requirements of Article 11.10.5 require length to height ratios varing gfrom 0.8*H* for low satructures, i.e. 10.0 ft., to 0.63 *H* for high structures, i.e. 40.0 ft.

Significant shortening of the reinforcement elements below the minimum recommended ratio of 0.7*H* may only be considered when accurate, site specific determinations of the strength of the unreinforced fill and the foundation soil have been made. Christopher et al. *(1990)* presents results which strongly suggest that shorter reinforcing length to height ratios. I.e. 0.5 *H* to 0.6 *H* , substantially increase horizontal deformations.

The reinforcement length shall be uniform throughout the entire height of the wall, unless substantiating evidence is presented to indicate that variation in length is satisfactory.

A nonuniform reinforcement length may be considered under the following circumstances:

Lengthening of uppermost reinforcement layers to beyond 0.7*H* to meet pullout requirements, or to address seismic or impact loads.

Lengthening of the lowermost reinforcement layers beyond 0.7*H* to meet overall (global) stability requirements based on the results of a detailed global stability analysis.

Shortening of bottom reinforcement layers to less than 0.7*H* to minimize excavation requirements, provided the wall is bearing on rock or very competant foundation soil (see below).

For walls on rock or very competent foundation soil, e.i., SPT > 50, the Bottom reinforcements may be shortened to a minimum of 0.4*H* with the Upper reinforcements lengthened to compensate for external stability issues in lieu of removing rock or competent soil for construction. Design Guidelines for this case areprovided in FHWA Publications No. FHWA-NHI-00-043 (Elias et al. 2001).

For conditions of marginal stability, consideration must be given to ground improvement techniques to improve foundation stability, or to lengthening of reinforcement."

MSE walls are pre-qualified and listed on the internet in two categories:

- Small block walls
- Large block walls

Small block walls are battered walls with a maximum height of 10 feet.

Large block walls are vertical walls with heights that may exceed 10 feet.

Combination wall systems are considered small block wall system and shall be battered with a maximum height of 10 feet.

Any deviation from the criteria listed shall be discussed with Structural Project Manager.

8.1.4.3 MSE Walls

Both the horizontal alignment and the top of wall elevations are supplied by the district in the Bridge Survey. You do need to check the top of wall elevations to make sure the district accounted for any concrete gutters placed behind the top of the wall. These are necessary if the slope of the fill will direct water towards the top of the wall. The district should decide whether to use type A or type B gutters (Mo. Std. Plan 609.00) and where they should drain to.

You will also need to set the elevations for the top of the leveling pad. The minimum embedment, which is the distance between the finished ground line and the top of the leveling pad, is based on this table: (FHWA Demo. #82)

Slope in Front of Wall	Minimum Embedment
Horizontal	H/20
3H:1V	H/10
2H:1V	H/7

The absolute minimum embedment is 2'. When the soundings are returned, they will include a minimum embedment necessary for global stability.

Estimating the cost of MSE walls is quite simple. Use $35 to $40 per square foot of the area of the face of the wall.

The request for soundings for MSE walls should include requests for the angle of internal frictions (Ø) for both the foundation and the retained material. Request that soundings be taken every 25 feet along the wall alignment. Soundings shall be made to rock or to a point which is 20 feet below the bottom of the wall, whichever is higher.

If soundings indicate weak material exist then the designer should investigate that sufficient right of way limits exist to address the required length for the soil reinforcement.

8.1.4.4 CIP Concrete Walls

Once you determine that you must use a CIP concrete wall, there is very little to do as far as the layout of the structure. Both the horizontal alignment and the top of wall elevations are supplied by the district in the Bridge Survey. You do need to check the top of wall elevations to make sure the district accounted for any concrete gutters placed behind the top of the wall. These are necessary if the slope of the fill will direct water towards the top of the wall. The district should decide whether to use type A or type B gutters (Mo. Std. Plan 609.00) and where they should drain to.

You will also need to set the elevations for the top of the footing, which should be a minimum of 2 feet below the finished ground line for walls south of Interstate 70 and 3 feet below the finished ground line for walls north of Interstate 70. In tight roadway situations where a barrier curb is to be placed on top of the wall, make sure that a stem thickness of 16" will fit.

Check with the District Contact to determine if they want any coping on the exposed face of the wall. See LFD BM 3.62.3.8-3 for examples of coping.

French drains will be used to relieve water pressure behind the CIP wall as a default. If you expect to encounter springs or swampy conditions, then check with the District Contact on calling for an underdrain (LFD BM 3.62.3.8-4). If the decision is made to use an underdrain, the porous backfill and pipes are Roadway Items and this must be noted on the Bridge Memorandum and Design Layout.

The request for soundings for CIP walls should include requests for the angle of internal friction (Ø) for the retained material as well as an allowable bearing value for the foundation. Request that soundings be taken every 25 feet along the wall alignment. Soundings shall be made to rock or to a point which is 20 feet below the bottom of the wall, whichever is higher.

A guide to estimating the costs of CIP retaining walls can be found on the following page. This is relatively accurate as long as you don't need to place the wall on piling. If you have indications that the foundation material is very poor in quality (less than 1 ton per sq. foot allowable bearing), add some money for piling.

Estimating Costs of CIP Retaining Walls

Wall Height in Feet	Cost per Linear Foot
1	$30
2	$50
3	$70
4	$80
5	$100
6	$180
7	$250
8	$330
9	$400
10	$480
11	$540
12	$600
13	$660
14	$710
15	$770
16	$830
17	$900
18	$970
19	$1,030
20	$1,090
21	$1,150
22	$1,220
23	$1,280
24	$1,340
25	$1,410
26	$1,490
27	$1,560
28	$1,640
29	$1,710
30	$1,790
31	$1,870
32	$1,940
33	$2,020
34	$2,090
35	$2,170

Wall height is measured from the top of the footing to the top of the wall.

8.1.4.5 Obstructions

Any time the retaining wall will encounter obstructions, provisions must be made on the final plans. Therefore, if you are aware of any obstructions, they should be called out on the Bridge Memorandum and Design Layout Sheet. Here are some examples of types of obstructions and how to describe them on the layout:

Type of Obstruction	Description
Lighting Foundation	Std. 45' Light Pole, Sta. 167+48.50, 16 ft. left
Sign Truss Foundation	Truss T-72, Sta. 172+41.80, 31 ft. right
Drop Inlet	2' x 2' Type D Drop Inlet, Sta. 163+12.45, 14 ft. left