State	Proj. No.	Sheet No.
MO		

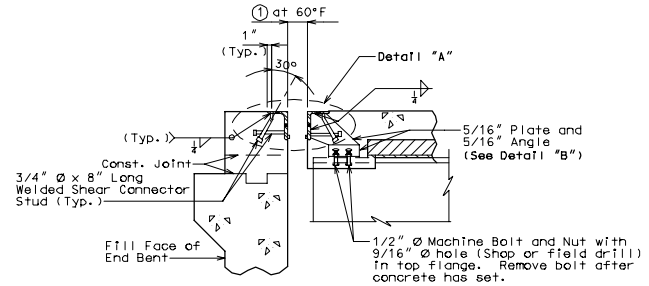

PART SECTION D-D

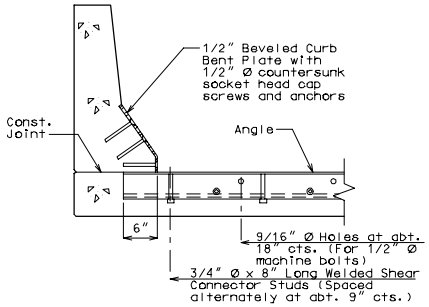

PART SECTION B-B

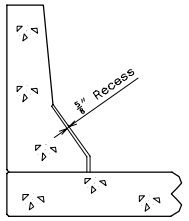

PART SECTION A-A

GENERAL NOTES:

Expansion joint system shall be fabricated in one section, except for stage construction and when the length is over 50 feet. A complete joint penetration groove welded splice shall be required. Welds shall be ground flush to provide a smooth surface. The expansion joint system shall be fabricated and installed to the crown and grade of the roadway.

Plan dimensions are based on installation at 60°F. The expansion gap and other dimension shall be increased or decreased ___" for each 10° fall or rise in temperature at installation.

Structural steel for the expansion joint system shall be ASTM A709 Grade 36. Anchors for the expansion joint system shall be in accordance with Sec 1037. Preformed compression seal expansion joint systems shall be in accordance with Sec 717.

Structural steel for the expansion joint system and curb plate shall be coated with a minimum of two coats of inorganic zinc primer (5 mils minimum) or galvanized in accordance with ASTM A123. Anchors need not be protected from overspray.

Concrete shall be forced under armor angle and around anchors. Proper consolidation of the concrete shall be achieved by localized internal vibration.

Longitudinal reinforcing steel shall be placed so that ends shall not be more than ±1" from vertical leg of angle at the expansion joint system.

Curb plate anchors shall be a drilled cone expansion or a cast-in-place wing type threaded insert. The minimum ultimate pullout capacity for these anchors shall be 2700 lbs in f'c = 4000 psi concrete. Lead anchors will not be permitted. Holes in the barrier curb for anchors shall not be drilled until the concrete is at least 7 days old.

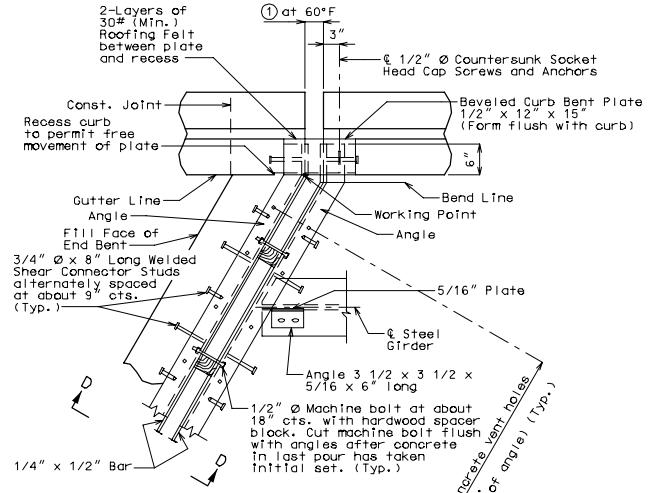

PART PLAN

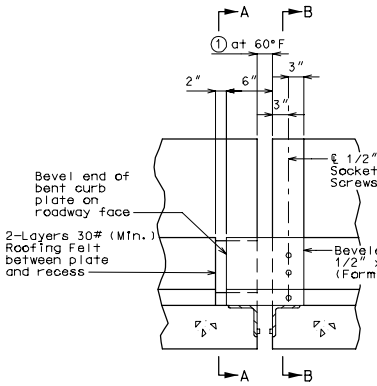

PART ELEVATION OF BARRIER CURB

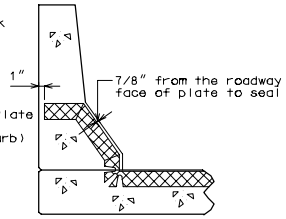

PART SECTION THRU JOINT SEAL

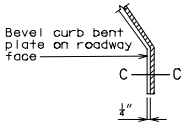

PART ELEVATION AT END OF BEVELED CURB BENT PLATE

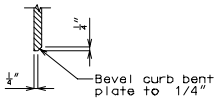

SECTION C-C

TABLE OF TRANSVERSE BRIDGE SEAL DIMENSIONS			
Seal (Width)	①	②	Required Movement Range
2.5"	1 5/8"	Manufacturer's Recommended Height	0.9"
3.0"	1 7/8"	Manufacturer's Recommended Height	1.0"
3.5"	2 1/4"	Manufacturer's Recommended Height	1.3"
4.0"	2 5/8"	Manufacturer's Recommended Height	1.6"
4.5"	2 3/4"	Manufacturer's Recommended Height	1.9"
5.0"	2 7/8"	Manufacturer's Recommended Height	2.0"

Note: Depth of seal shall not be less than width of seal.

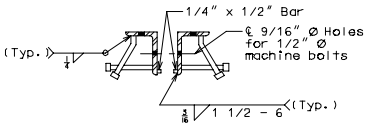

DETAIL "A"

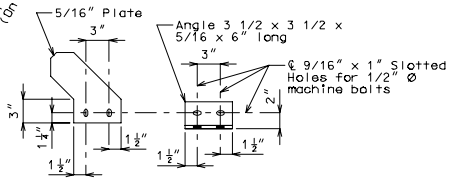

DETAIL "B"

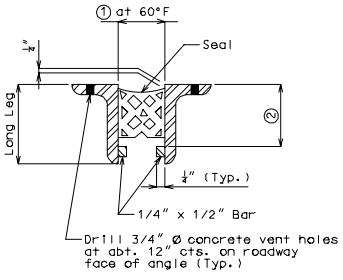

PART CROSS SECTION THRU EXPANSION JOINT

Size of armor angle: Vertical leg of angle shall be a minimum of ② + 3/4". Horizontal leg of angle shall be a minimum of 3". Minimum thickness of angle shall be 1/2".

If a seal size larger than that indicated on the plans is used, the movement range, the opening at 60°F and all dimensions for the armor angles shall be shown on the shop drawings.

Payment for furnishing, coating or galvanizing and installing the structural steel for the expansion joint will be considered completely covered by the contract unit price for Preformed Compression Seal Expansion Joint System.

CREATED IN MICROSTATION

DETAILS OF PREFORMED COMPRESSION JOINT SEAL AT END BENT NO.

Detailed
Checked

Note: This drawing is not to scale. Follow dimensions.

Sheet No. of

COUNTY CJS 4

REV.