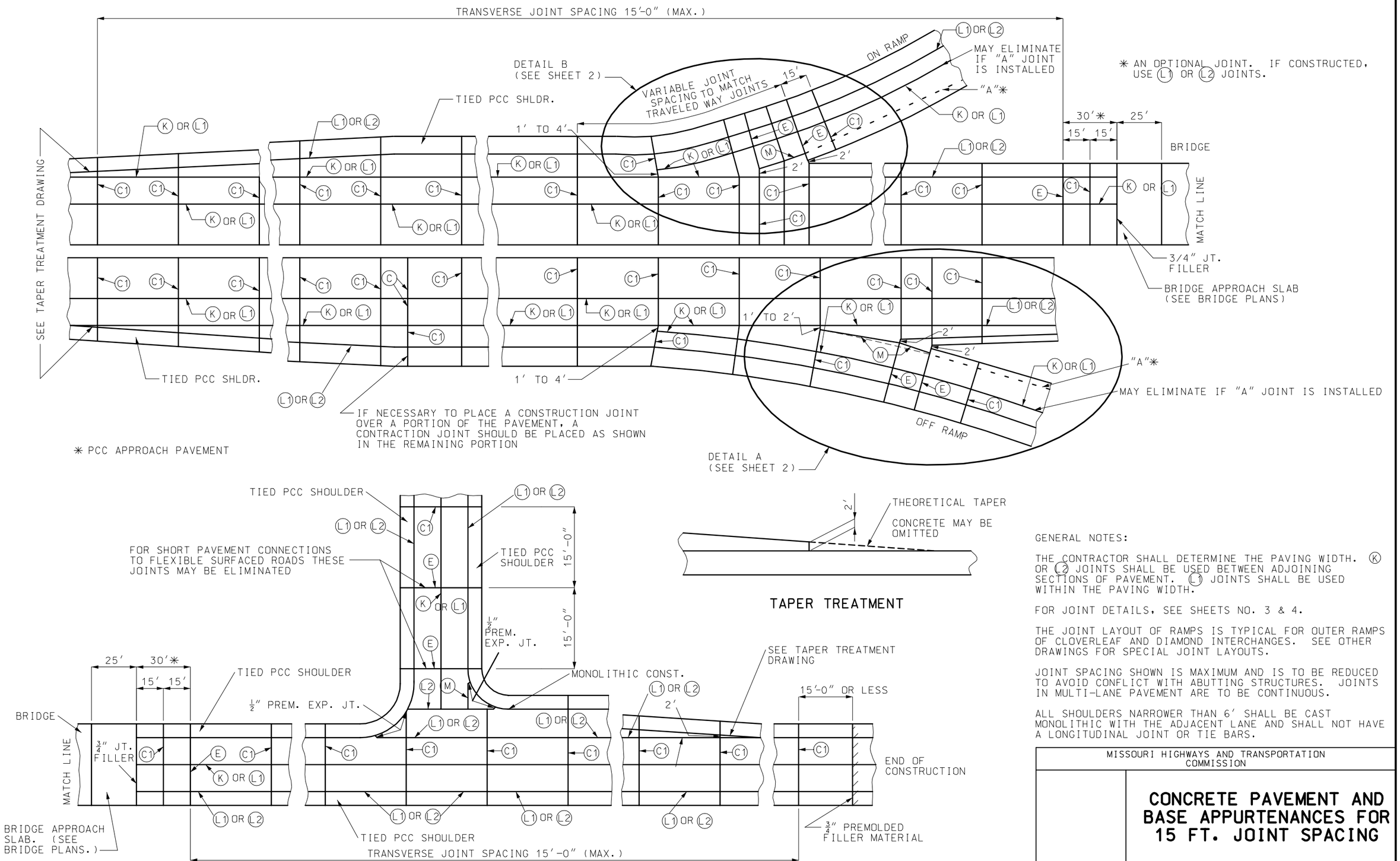

TAPER TREATMENT

PLAN FOR LOCATING JOINTS

GENERAL NOTES:

THE CONTRACTOR SHALL DETERMINE THE PAVING WIDTH. K OR L2 JOINTS SHALL BE USED BETWEEN ADJOINING SECTIONS OF PAVEMENT. L1 JOINTS SHALL BE USED WITHIN THE PAVING WIDTH.

FOR JOINT DETAILS, SEE SHEETS NO. 3 & 4.

THE JOINT LAYOUT OF RAMPS IS TYPICAL FOR OUTER RAMPS OF CLOVERLEAF AND DIAMOND INTERCHANGES. SEE OTHER DRAWINGS FOR SPECIAL JOINT LAYOUTS.

JOINT SPACING SHOWN IS MAXIMUM AND IS TO BE REDUCED TO AVOID CONFLICT WITH ABUTTING STRUCTURES. JOINTS IN MULTI-LANE PAVEMENT ARE TO BE CONTINUOUS.

ALL SHOULDERS NARROWER THAN 6' SHALL BE CAST MONOLITHIC WITH THE ADJACENT LANE AND SHALL NOT HAVE A LONGITUDINAL JOINT OR TIE BARS.

MISSOURI HIGHWAYS AND TRANSPORTATION COMMISSION

CONCRETE PAVEMENT AND BASE APPURTENANCES FOR 15 FT. JOINT SPACING

DATE:_____ | EFFECTIVE: 07-01-2004 | **502.05F** | 1/4

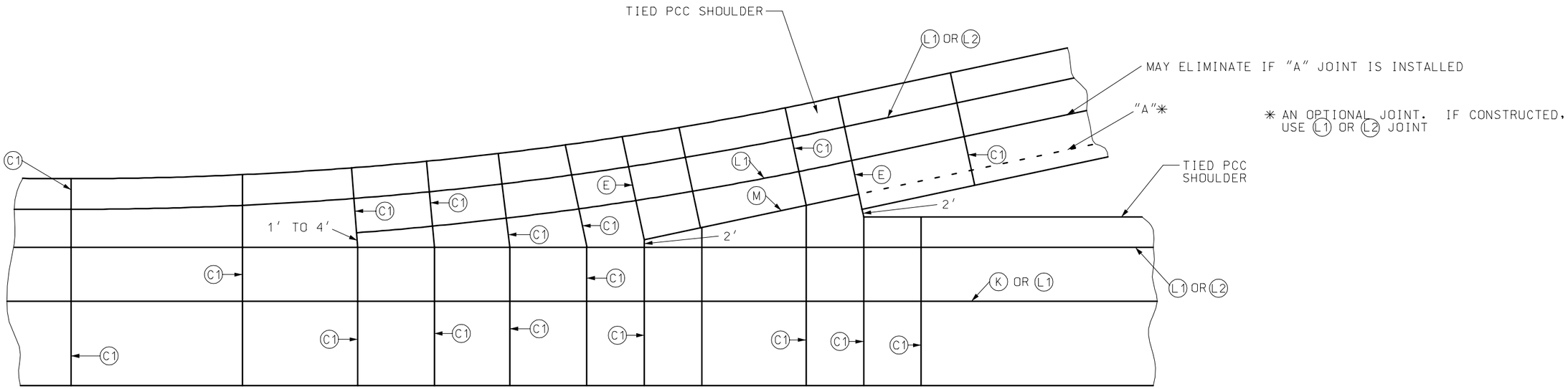

DETAIL B
(FROM SHEET 1 OF 4)

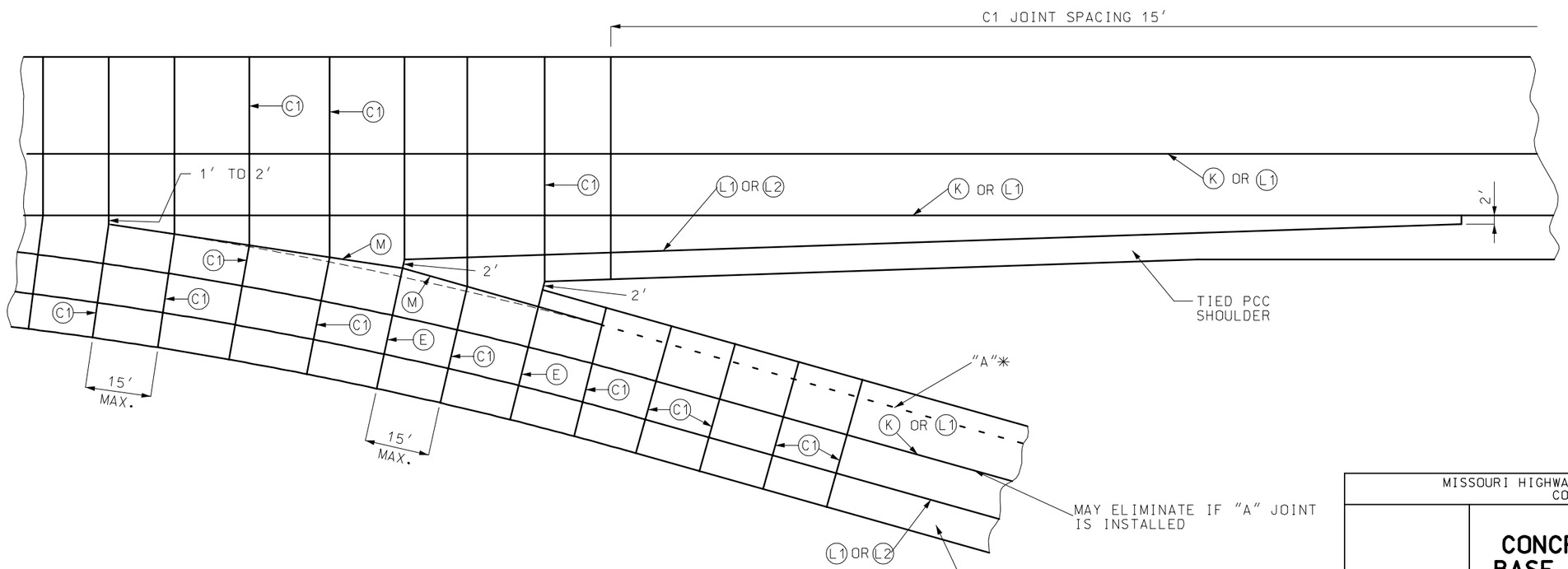

DETAIL A
(FROM SHEET 1 OF 4)

MISSOURI HIGHWAYS AND TRANSPORTATION COMMISSION			
	CONCRETE PAVEMENT AND BASE APPURTENANCES FOR 15 FT. JOINT SPACING		
DATE:_____	EFFECTIVE: 07-01-2004	502.05F	2/4

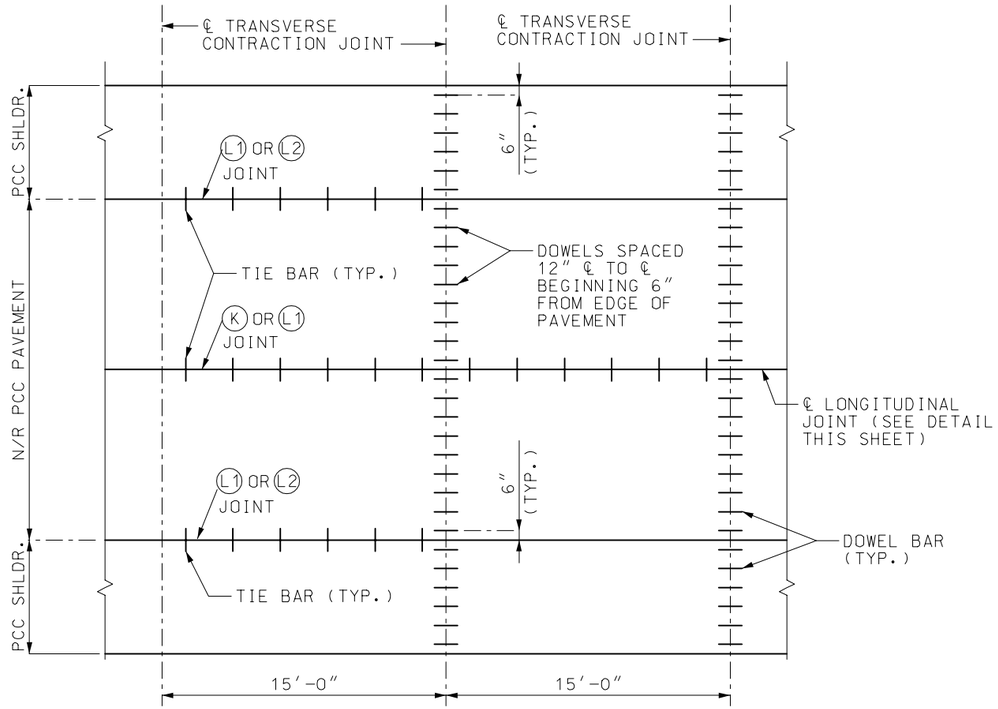

JOINT PLAN AND SPACING FOR CONTRACTION JOINTS (1)

(1) JOINT NOT REQUIRED AT INSIDE SHOULDER ON DIVIDED HIGHWAYS OR AT INSIDE SHOULDER OF RAMPS.

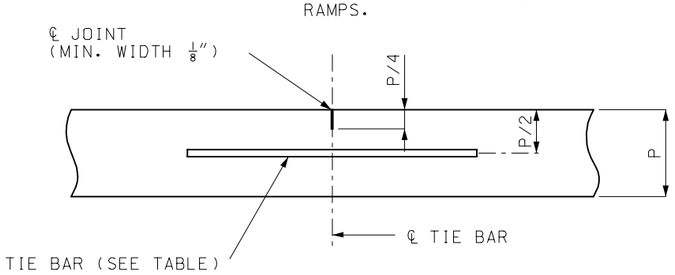

TIE BARS REQUIRED.

LONGITUDINAL JOINT (L1)

TIE BAR TABLE				
PCCP THICKNESS (P)	DOWEL SIZE	TIE BAR SIZE	DOWEL SPACING	TIE BAR SPACING
10″ OR LESS	1 1/4″X18″	#5X30″	12″ CTR.-CTR.	30″ CTR.-CTR.
GREATER THAN 10″	1 1/2″X18″	#6X40″	12″ CTR.-CTR.	30″ CTR.-CTR.

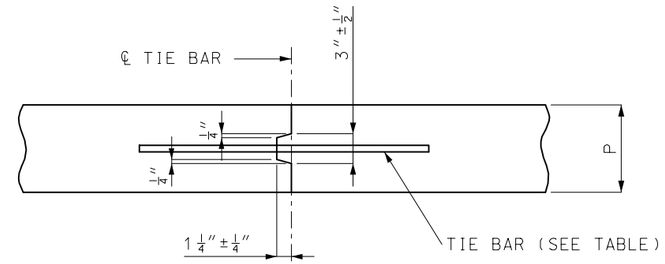

IF METAL IS USED TO FORM KEY DISCONTINUE STRIP FOR DISTANCE OF APPROXIMATELY 3″ EACH SIDE OF TRANSVERSE JOINT.

TYPE (K) REQUIRES TIE BAR.

TYPE (M) CONSTRUCTED WITHOUT TIE BARS.

(K) AND (M) JOINTS SHALL NOT BE SAWED.

TONGUE AND GROOVE JOINTS (K) AND (M)

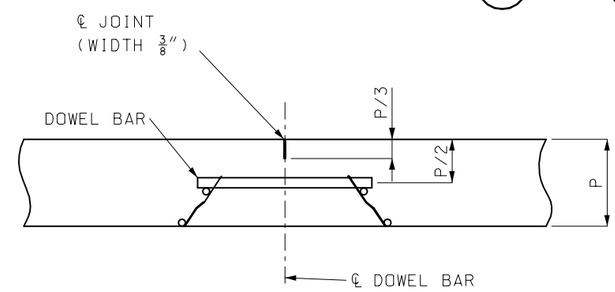

DOWELS REQUIRED. FOR PERMISSIBLE TYPES OF DOWELS SUPPORTING UNITS, SEE OTHER DRAWINGS.

TRANSVERSE CONTRACTION JOINTS FOR CONCRETE PAVEMENT OR BASE WIDENING SHALL MATCH EXISTING JOINTS.

TRANSVERSE CONTRACTION JOINT (C1) (2)

(2) DOWEL BARS ARE REQUIRED FOR ALL PAVEMENTS HAVING THE SAME THICKNESS AS THE TRAVELED WAY.

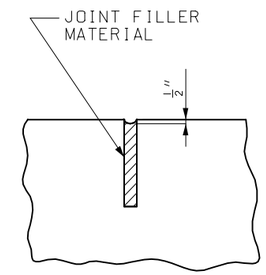

JOINT FILLER DETAIL

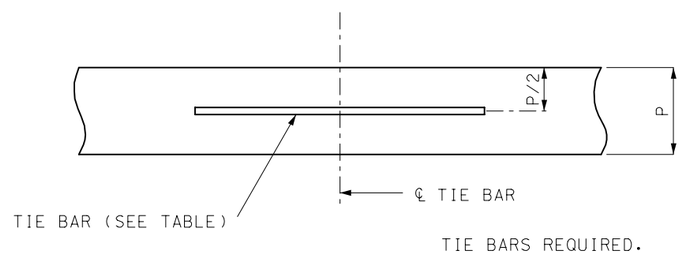

TIE BARS REQUIRED.

LONGITUDINAL CONSTRUCTION JOINT FOR NEW CONSTRUCTION (L2)

GENERAL NOTES:

THE FINAL POSITION OF ALL DOWELS AND TIE BARS SHALL BE PERPENDICULAR TO THE PLANE OF THE JOINT AND PARALLEL TO THE SURFACE OF THE PAVEMENT AND PARALLEL TO EACH OTHER.

MISSOURI HIGHWAYS AND TRANSPORTATION COMMISSION

CONCRETE PAVEMENT AND BASE APPURTENANCES FOR 15′ JOINT SPACING

DATE:_____ | EFFECTIVE: 07-01-2004 | **502.05F** | 3/4

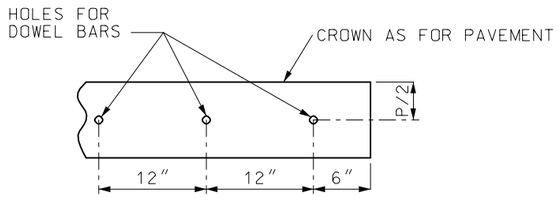

PART ELEVATION OF
HEADER PLANK

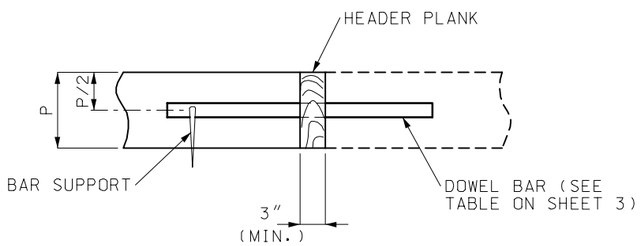

HEADER SECTION

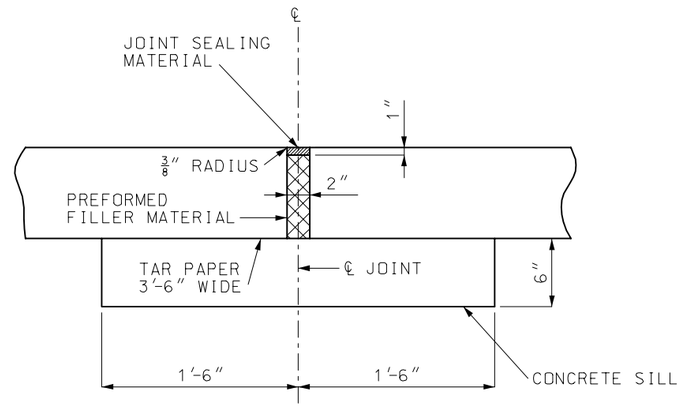

SILL SHALL EXTEND 18″ BEYOND EACH EDGE OF THE PAVEMENT AND SHALL BE CONSTRUCTED OF CONCRETE REGARDLESS OF ADJACENT BASE MATERIAL.

EXPANSION JOINTS (E)

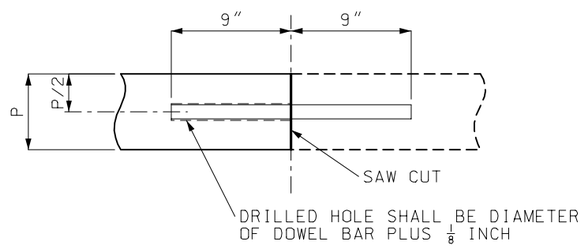

SAWED SECTION

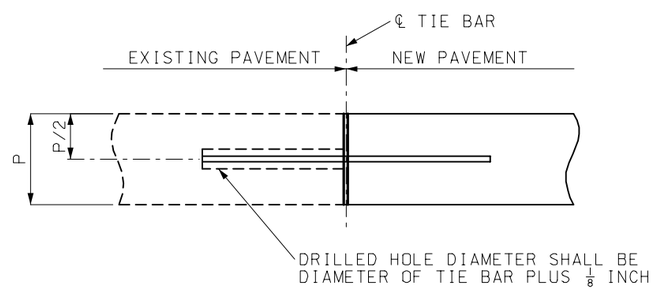

THE HEADER BOARD SHALL BE SUFFICIENTLY RIGID TO PREVENT DISTORTION FROM THE TYPICAL SECTION AND MAINTAIN A STRAIGHT LINE FROM PAVEMENT EDGE TO PAVEMENT EDGE.

THE CONSTRUCTION JOINT MAY BE SAWED FULL DEPTH, HOLES FOR DOWEL BARS SHALL BE DRILLED AFTER THE CONCRETE HAS SUFFICIENT SET TO PREVENT DAMAGE. DOWEL BARS SHALL BE BONDED INTO THE HOLES.

BONDING FOR DOWEL BARS SHALL BE EPOXY OR POLYESTER BONDING AGENTS AS SPECIFIED IN SECTION 1039.

THE PORTION OF THE DOWEL OUTSIDE THE HOLE SHALL BE COATED WITH AN APPROVED LUBRICANT.

CONSTRUCTION JOINT (C)

TIE BARS SHALL BE EPOXY COATED, DEFORMED REINFORCING BARS MEETING THE REQUIREMENTS OF SECTIONS 710 AND 1057.

BONDING FOR TIE BARS SHALL BE EPOXY OR POLYESTER BONDING AGENTS AS SPECIFIED IN SECTION 1039.

TIE BAR SIZE AND LENGTH SHALL BE BASED ON THE THICKNESS OF THE THINNER PAVEMENT OR SHOULDER TO BE TIED TOGETHER.

LONGITUDINAL CONSTRUCTION JOINT
(EXISTING PAVEMENT)

MISSOURI HIGHWAYS AND TRANSPORTATION COMMISSION			
	CONCRETE PAVEMENT AND BASE APPURTENANCES FOR 15′ JOINT SPACING		
DATE:_____	EFFECTIVE:07-01-2004	502.05F	4/4